THE WEST FARGO AQUIFER SYSTEM, CASS and RICHLAND COUNTIES, NORTH DAKOTA & CLAY, NORMAN and WILKIN COUNTIES, MINNESOTA: GROUND-WATER DATA: VOLUME C

By

David P. Ripley,
Michael H. Hove,
and
Christopher D. Bader

North Dakota Ground-Water Studies
Number 106 - Part I
North Dakota State Water Commission
David Sprynczynatyk, State Engineer

Prepared by the
North Dakota State Water Commission
In cooperation with the
Southeast Cass Water Resource District

1997

THE WEST FARGO AQUIFER SYSTEM, CASS and RICHLAND COUNTIES, NORTH DAKOTA & CLAY, NORMAN and WILKIN COUNTIES, MINNESOTA: GROUND-WATER DATA: VOLUME C

By

David P. Ripley,
Michael H. Hove,
and
Christopher D. Bader

North Dakota State Water Commission

Prepared in co-operation with the
Southeast Cass Water Resource District

Published by
North Dakota State Water Commission
900 East Boulevard
Bismarck, North Dakota 58505

Ground Water Study 106, Part I
North Dakota State Water Commission
David A. Sprynczynatyk, State Engineer

1997

TABLE OF CONTENTS
VOLUME C

Page

INTRODUCTION .....C 1

PURPOSE .....C 3

LOCATION-NUMBERING SYSTEM .....C 3

ACKNOWLEDGEMENTS .....C 5

EXPLANATION OF DATA TABLES AND METHODS OF DATA COLLECTION .....C 6

REFERENCES .....C 11

ILLUSTRATIONS:

FIGURES

1. Map showing the study area .....C 2

2. Location-numbering system .....C 4

TABLES

VOLUME A

1A. Table of inventory of wells and test holes for townships 135 to 138 (lithologic logs where available) .....A 18

VOLUME B

1B. Table of inventory of wells and test holes for townships 139 to 143 (lithologic logs where available) .....B 18

VOLUME C

2. Table of water levels in observation wells and piezometers .....C 18

3. Table of chemical analyses .....C 212

4. Table of stable isotope analyses .....C 224

5A. Table of water use data sources .....C 225

5B. Table of Minnesota municipal water use (excluding Moorhead) .....C 226

5C. Table of North Dakota municipal water use (excluding Fargo & West Fargo) .....C 227

5D1. Table of Moorhead water use from different sources .....C 228

5D2. Table of Moorhead water use from different points of diversion .....C 230

5E1. Table of Fargo water use (Red River surface water and Fargo aquifer) .....C 232

5E2. Table of monthly Fargo water use (Fargo aquifer) .....C 232

5F. Table of West Fargo water use .....C 233

5G. Table of Minnesota nonmunicipal ground-water use ....C 234

5H. Table of North Dakota nonmunicipal ground-water use .....C 235

5I. Table of summarry of water use from different sources .....C 236

6A. Table of selected location name duplications listed by current location name .....C 238

6B. Table of selected location name duplications listed by name used in llterature .....C 239

7A. Table of Minnesota community water supply sources in the study area .....C 240

7B. Table of North Dakota community water supply sources in the study area .....C 241

PLATE

1. Plate showing most of the locations associated with the data presented in this data report .....(back cover of report)

INTRODUCTION

The West Fargo aquifer system (WFAS) is located predominantly in eastern Cass County and northeast Richland County. The WFAS is comprised of three aquifers that underlie an area of 10 square miles or more, and numerous, smaller subaquifers. The three aquifers of 10 square miles or more are called the West Fargo North aquifer, the West Fargo South aquifer, and the Horace aquifer. These aquifers are indirectly connected, as are many of the numerous, smaller subaquifers. The nature of the indirect connections between the aquifers and the subaquifers vary, both in nature and in degree. The total area underlain by all of the aquifers or subaquifers in the WFAS is estimated to be about 90 square miles.

Across the river in Minnesota there are additional small subaquifers, and the Buffalo aquifer. In order to ascertain if there are any connections between the WFAS and the aquifers and subaquifers in Minnesota, the study area was expanded to include part of Minnesota. Thus the study area incorporates several townships that lie partly or entirely in Minnesota. The total study area (see Figure 1) incorporates about 1,550 square miles.

The WFAS has been used as a source of water for over 100 years, dating back to the late 1800's. The utilization of the WFAS as a source of water has increased over this same time period, and as a result, the water levels in all known portions the WFAS have continued to go down in elevation. Concern over the long-term viability of the WFAS

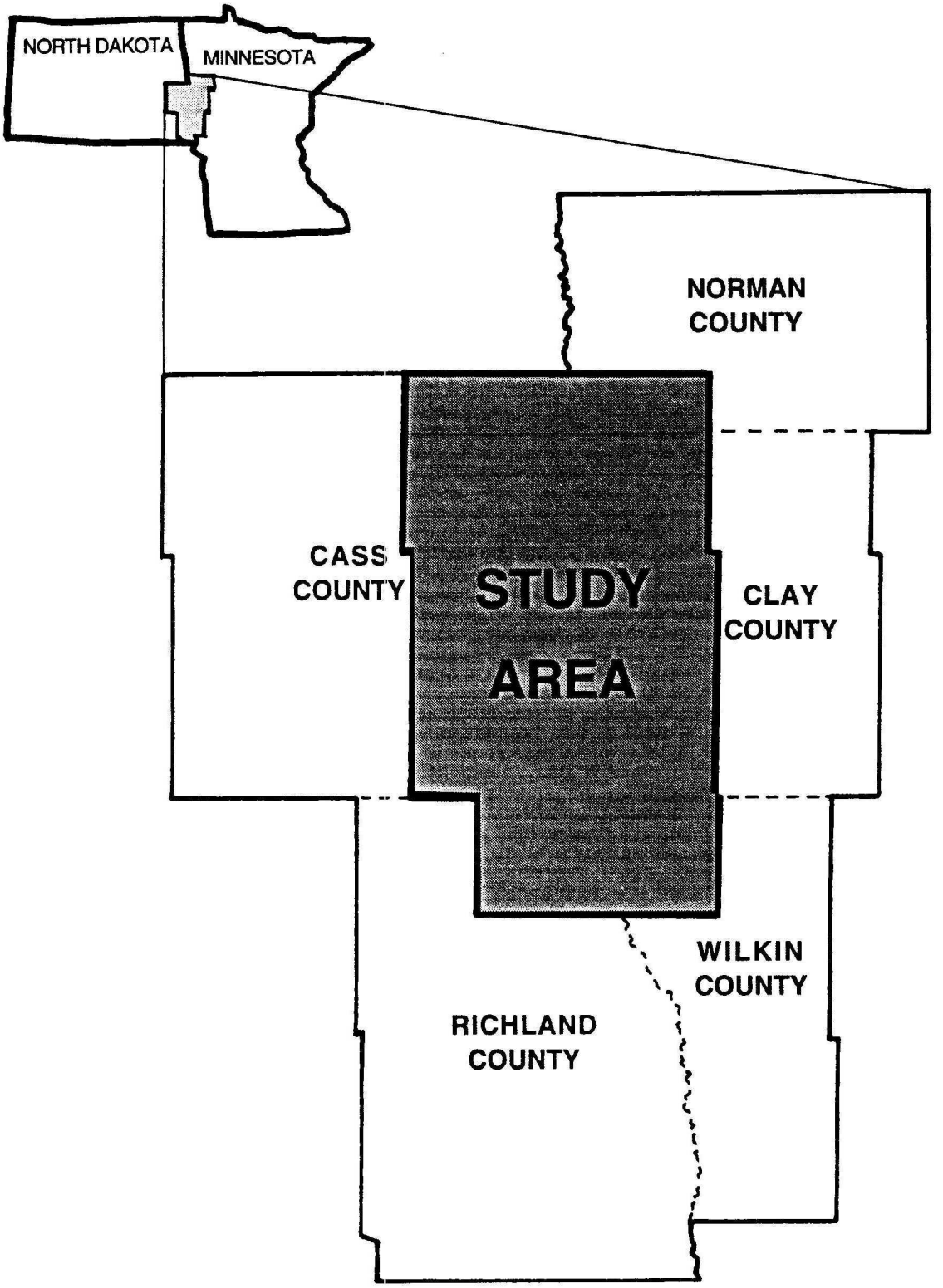

Figure 1. Location diagram of the study area.

led to the Southeast Cass Water Resource District's sponsorship of this study of the West Fargo aquifer system.

The study is divided into two parts. Part I is a compilation of the geologic and hydrologic data collected during this and previous investigations, as well as data that was not associated with any previous study. Part II is a report that discusses the ground-water resources of the study area.

PURPOSE

The purpose of this investigation was to define the nature of the ground-water resources in the vicinity of eastern Cass County, and northeastern Richland County.

LOCATION NUMBERING SYSTEM

The location-numbering system used in this report (fig. 2) is based on the Federal system of rectangular surveys of the public lands. The first numeral denotes the township, the second denotes the range, and the third denotes the section in which the well or test hole is located. The letters A, B, C, and D designate, respectively, the northeast, northwest, southwest, and southeast quarter section, quarter-quarter section, and quarter-quarter-quarter section (10 acre or 4 hectare tract); thus, well 139-049-04ADD would be located in the

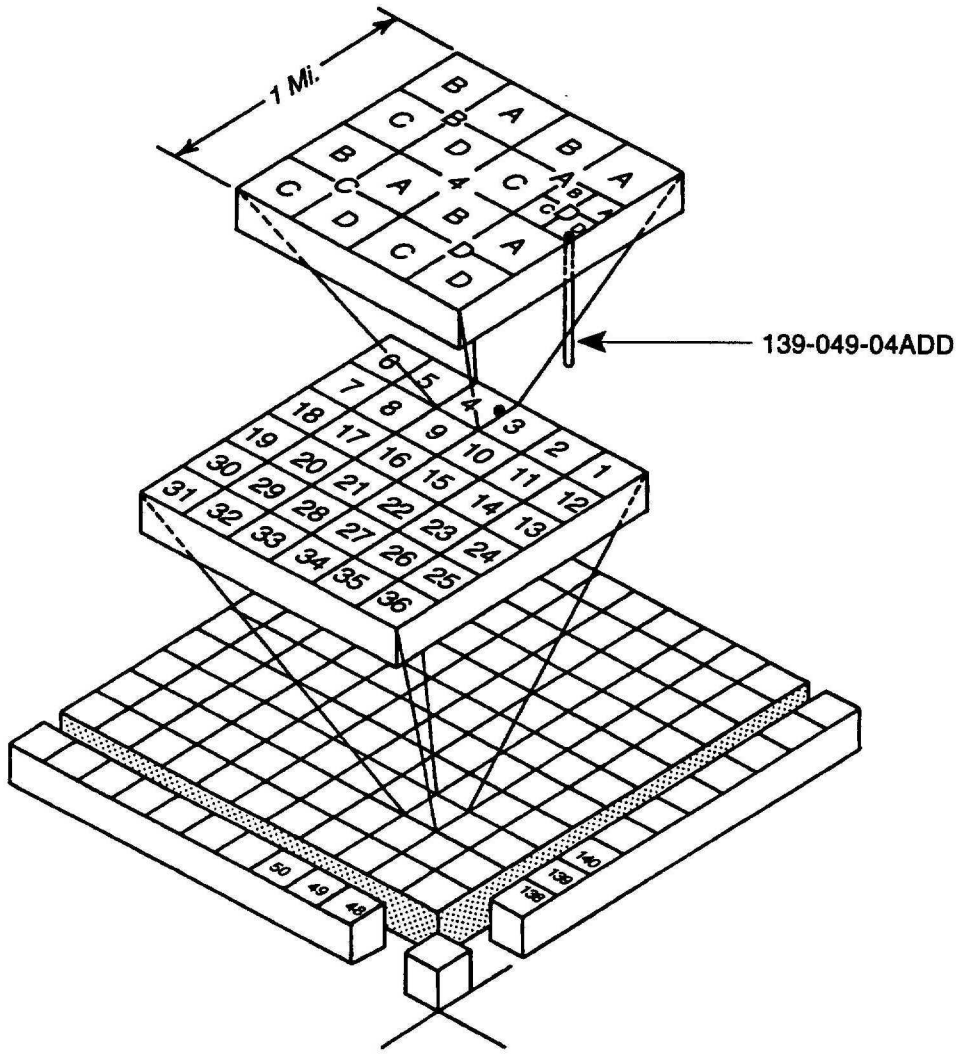

Figure 2. Location-numbering system.

SE1/4 of the SE1/4 of the NE1/4 of Section 4, Township 139 North, Range 49 West. Consecutive terminal numbers are added if more than one well or test hole is recorded within a 10-acre (4-ha) tract. Thus 139-049-04ADD3 would be the third location in the 10-acre area described by 139-049-04ADD.

In this study each 10-acre area sometimes was further divided into 2.5, 0.625, and 0.15625 acre areas in the same manner described above. Thus, well 139-47-08BACADB is located in the NW1/4 of the SE1/4 of the NE 1/4 of the SW1/4 of the NE1/4 of the NW1/4 of Section 8, Township 139 North, Range 47 West.

ACKNOWLEDGEMENTS

Local sponsorship of this study was provided by the Southeast Cass Water Resource District. Additionally, data pertaining to the water resources of the area have been gathered from numerous reports mentioned in the references, and from Cliff McLain (city of Moorhead), Bob Welton (city of Fargo), Sean Hunt (Minnesota DNR), Ken Harris & Tim Wahl (Minnesota Geological Survey), Pat McCollum (Cass Rural Water Users, Inc.), Arlen Kotta (city of Comstock), and Scott Lofgren (city of Glyndon). A special thanks to Florenz Bjorson, former mayor of West Fargo, who was part of many early discussions that led to this study.

EXPLANATION OF TABLES AND METHODS OF DATA COLLECTION

The data in this report are listed in tables 1-7. The data consist of the following: 1) an inventory of selected locations that have wells, piezometers, and test holes, with associated lithologic logs where they are available; 2) water-levels in selected wells and piezometers (up to 1996); 3) chemical analyses of ground water samples (up to 1996); 4) stable isotopic analyses of ground water samples (up to 1996); 5) historic water use (up to 1995); 6) a list of duplicate names and locations of wells; and 7) a list of community water supplies.

Depths, water quality, lithologies, and water levels of wells and test holes tapping the different aquifers can be determined from the tables. However, use of the data as a guide to conditions at different sites should be made with caution because of the lenticular character of the water-bearing materials and varying water quality in some aquifers. Some of the data listed in this publication has been presented in other reports. Because the data is distributed in so many other reports (about 40 to 50 of the reports listed in "Selected References"), this report makes an effort to list all of the previously reported data. Every effort has been made to amalgamate the data so that all data associated with one physical well is listed under one well descriptor.

Most of the locations associated with the data presented in these tables are shown on the map of the study area presented in Plate 1 found in the back of each volume of the data report.

Lithologic Logs of Wells, Piezometers, and Test Holes

Lithologic logs collected from water-well contractors and other sources and logs of test holes drilled as part of this investigation are included in Table 1. Minor changes in word order have been made on some of the contractor's logs, and logs of some of the test holes drilled during this and prior investigations. Geophysical logs are available for some test holes. These logs are useful for geologic correlation purposes. The geophysical logs are not published in this report but are available for inspection at the North Dakota State Water Commission office in Bismarck, ND. Grain-size determinations refer to the Wentworth (1922) size scale.

SWC observation wells constructed prior to this study were completed with 1 1/4" or 2" diameter ABS (acrylonitrile-Butadiene-Styrene) or PVC (polyvinyl chloride) pipe. The screens in these wells were generally 3 to 10 feet in length and either plastic, galvanized, or stainless steel with an attached check valve joined to the bottom of the pipe. The screens were most commonly 0.018 or 0.012 inch slot size. The components of an observation well were assembled on the ground at the drill site and then placed into the drill hole. The screen was set at the desired depth, the well back-flushed with clear water to clean the aquifer material and bore hole of drilling fluid, and

compressed air pumped into the well to collapse the formation around the screen. The annulus was filled to ground level with drill cuttings. Each new observation well was pumped for several hours to assure a good hydrologic connection between the well and the aquifer. Pumping was accomplished with an airline connected to a small, trailer-mounted air compressor driven by a gasoline engine.

Piezometers were constructed for this study. Construction of the piezometers involved the drilling of a deep test hole to evaluate the lithology to determine the number of piezometers to be installed at a particular site. This deep test hole (in most instances) also served as the hole for the deep piezometer, if the deepest desired screened interval was close to the bottom of the hole. First, the appropriate length of casing and screen were placed into the test hole. Silica sand was then placed around the screen using a tremie pipe with the lower end located a couple of feet above the top of the screen. After the silica sand was installed around the screen the lower end of the tremie pipe was lifted so that the bottom of the tremie pipe was a few feet above the top of the sand pack. Neat cement grout or high-solids bentonite grout was then pumped down the tremie pipe and upward in the annular space. This process continued until the grout filled the entire annulus up to land surface. If the grout settled, additional grout was poured or pumped down the hole until the annular space was filled to land surface.

A day or two passed to allow the grout to "set", and then the piezometers were slugged with a small quantity of fresh water and

pumped with air for development. Each new piezometer was pumped for several hours to assure a good hydrologic connection between the piezometer and the aquifer. Subsequent piezometers, if necessary, were completed at each site by moving the drilling rig ahead 10 to 20 feet, drilling the next hole, and repeating the above described process.

Water Levels in Selected Wells and Piezometers

Table 2 lists the monthly, quarterly, and intermittently measured water levels in selected wells and piezometers, in feet below or above land surface and in elevations. The reference datum for land-surface elevation is the National Geodetic Vertical Datum (NGVD). The elevation of the land surface and/or measuring points at most sites in the database have been determined through the use of the U. S, Geological Survey 7 1/2 minute quadrangle (topographic) maps. The sites were located on the topographic map, and the elevation determined from the map. In most instances this was done in the field, and in some instances this was accomplished in an office environment. The sites determined in this fashion generally are determined to the nearest foot. Most of the observation wells and piezometers that have water level measurements associated with them have had the elevation more accurately determined through the use of differential leveling. The sites determined in this fashion are generally surveyed to the nearest tenth or hundreth of a foot.

Chemical Analyses of Ground Water

The analyses of the chemical composition and physical properties of water are reported in the Table of Chemical Analyses (Table 3). Most of these chemical analyses were done in the SWC chemical laboratory. The SWC chemical analyses were conducted on water samples collected from selected production wells, observation wells, and piezometers. The water sampling procedure involved the collection of 250 or 500 milliliters (ml) of raw water, filtered water, and filtered and acidified (nitric acid) water. Field measurements of specific conductance and water temperature were also made. Water temperature was, however, measured at land surface and does not represent an in-situ temperature. The pH was measured in the lab. Water samples were collected from domestic, industrial, and city supply wells by using the existing pumps. SWC observation wells and piezometers were sampled using several methods: these methods include bladder, gas squeeze, and peristaltic pumps, as well as airlift, and bailing procedures.

Airlift sampling was accomplished with a small diameter rubber hose attached to a portable air compressor. Sampling with a bailer involved the removal of at least two casing volumes of water by airlift and/or bailing techniques to introduce formation water into the well. After evacuating at least two casing volumes of water, a variable-capacity, point-source, bailer (pvc material) was lowered to just above the top of the well screen, except when the water level was close to the screened interval, in which case the bailer was extended into the

screened interval. Bailing continued until enough water was secured for the sample.

Stable Isotope Analyses of Ground Water

Samples from selected wells were analyzed for the stable isotopes ^{18}O (oxygen-18) and ^{2}H (deuterium). The results are listed in Table 4. The samples were filtered with a 0.45 micron filter and collected in 40ml bottles that were sealed with Teflon tape. No preservatives were used. The bottles were completely filled with no air headspace. The samples were refrigerated and kept out of direct sunlight.

Water Use

Historic water use in the study area dates back to the late 1800's; however, the first documented water use dates back to 1903. Documented water use records have been kept and/or reported by a number of different entities over the last 94 years. The result is a patchwork of water use records involving different time periods, with different categories, and different groupings in the amalgamation of reported water use. The water use tables (Tables 5A to 5I) make an effort to capture the recorded water use in as specific a manner as is possible, given the nature of the water use records.

In 1965 the SWC began requiring water use reports for all North Dakota water permit holders. The reporting method was self-reporting on the part of the permit holder in response to a mailing. In 1977 a cooperative effort between the U. S. Geological Survey (USGS) and the SWC was developed for the purpose of gathering more accurate water use data. From 1978 to 1982 the accuracy and the rate of reporting water use records steadily improved. Since 1983 the statewide record is generally about 94% complete, and reasonably accurate, depending on the permit holder.

In 1938 Minnesota began to collect water use data from some large permit holders. In the 1970s they began to collect water use data from all permit holders. Data collected before 1978 is on microfiche. After 1978 the water use data is on paper, and is not easily accessed, however it can be retrieved. Some computerization of the water use data records started in the late 70s, however due to the evolution of the changing computer systems, the record keeping was not stable until 1987. The first water use data considered reliable and accessible starts in 1988. The statewide record is generally about 93% complete, and moderately to fairly accurate, depending on the permit holder.

The city of Fargo has records of its use of water from the Red River that go back to 1946. The city of Moorhead has water use records that go back to 1952. Earlier Moorhead and Fargo water use data is taken from Byers et al (1946), Dennis et al (1949), and Wolf (1981). There are several amalgamations in the Moorhead water use data. The individual sources are listed and a combined total developed from the sum of those individual sources. A more accurate total is

listed in the "METERED TOTAL" column. This discrepancy is predominantly a result of the practice of bypassing the softening basin with the Moorhead East well water from 1952 until 1978. The well water that bypassed the softening basin wasn't metered. The remaining differences are the result of meter accuracy differences (1979-1995).

Well Location Descriptors

In the effort to characterize the historic water levels and the water quality of the different aquifers in the study area, many old records, raw data sheets, and old reports were investigated. Particularly useful for old water levels were the USGS Water Supply Papers that reported water levels and artesian pressures from the 1930s to the 1970s. These reports (and other reports) listed locations that had well descriptors that would sometimes change through time, and sometimes would be called more than one thing at a time. At different times the well would be described with a reference number, or a reference name, or a geographical description. Tables 6A and 6B are the results of an effort to identify the different descriptors that have been used for data sites that have had varying names.

Community Water Supplies

To identify the source of water supply for the many communities in the area, an effort was made to identify all known communities with a listing of their respective sources of water (Table 7). Table 7A lists the Minnesota communities, and table 7B lists the North Dakota communites.

SELECTED REFERENCES

Arndt, B. M., 1977, Stratigraphy of offshore sediment, Lake Agassiz - North Dakota: North Dakota Report of Investigation No. 60, 58 p.

Baker, C. H., Jr., 1966, Geology and ground-water resources of Richland County, North Dakota; part II, basic data: North Dakota Geological Survey Bulletin 46 and North Dakota State Water Commission County Ground Water Study 7, 170 p.

------, 1967, Geology and ground-water resources of Richland County, North Dakota; part I, geology: North Dakota Geological Survey Bulletin 46 and North Dakota State Water Commission County Ground Water Study 7, 45 p.

Baker, C. H., Jr., and Paulson, Q. F., 1967, Geology and ground-water resources of Richland County, North Dakota; part III, ground-water resources: North Dakota Geological Survey Bulletin 46 and North Dakota State Water Commission County Ground Water Study 7, 48 p.

Bingham, J. W., 1960, Basic geologic and ground-water data for Clay County, Minnesota: Minnesota Division of Waters Bulletin 8, 138 p.

Brookhart, J. W., and J. E. Powell, 1961, Reconnaissance of geology and ground water of selected areas in North Dakota: North Dakota Ground Water Studies No. 28, 91 p.

Byers, A. C., Wenzel, L. K., Laird, W. M., and Dennis, P.E., 1946, Ground water in the Fargo-Moorhead area, North Dakota and Minnesota: U.S. Geological Survey Open-File Report, 72 p.

Cragwell, J. S., 1977, Ground-water levels in the United States 1972-74 north-central states: U. S. Geological Survey Water-supply Paper 2163, 89 p.

Dennis, P. E., P. D. Akin, and G. F. Worts, Jr., 1949, Geology and ground-water resources of parts of Cass and Clay counties, North Dakota and Minnesota: North Dakota State Water Commission Ground Water Studies, no. 11, 177 p.

Donohue & Associates, Inc., 1990, Volume II, Supplemental hydrologic investigation, sanitary landfill sites, Fargo, North Dakota: Maple Grove, Minnesota, appendices E-K, 338 p.

Guyton and Associates, Inc., 1957, Report on ground-water conditions in the east Dilworth Aquifer, Moorhead, Minnesota: Report to the City of Moorhead, Minnesota, 23 p.

Hackett, O. M., 1964, Ground-water levels in the United States 1957-61 north-central states: U. S. Geological Survey Water-supply Paper 1781, 148 p.

Hendricks, E. L., 1969, Ground-water levels in the United States 1967-71 north-central states: U. S. Geological Survey Water-supply Paper 2090, 114 p.

Hickok, E. A. & Associates, 1982, Water supply/conservation investigations for the Fargo-Moorhead Area, phase 1, part 1: water demand projections: St. Paul, Minnesota, U.S. Army Corps of Engineers, 47 p.

------, 1984, Water supply/conservation investigations for the Fargo-Moorhead area, Phase 2: alternative source and treatment/distribution systems: U.S. Army Corps of Engineers, 285 p.

Klausing, R. L., 1966, Geology and ground-water resources of Cass County, North Dakota: part II, ground-water basic data: North Dakota Geological Survey Bulletin 47 and North Dakota State Water Commission County Ground Water Studies 8, 158 p.

------, 1968, geology and ground-water resources of Cass County, North Dakota; part I, geology: North Dakota Geological Survey Bulletin 47 and North Dakota State Water Commission County Ground Water Studies 8, 39 p.

------, 1968, geology and ground-water resources of Cass County, North Dakota; part III, hydrology: North Dakota Geological Survey Bulletin 47 and North Dakota State Water Commission County Ground Water Studies 8, 77 p.

LaMoreaux, P. E., 1959, Ground-water levels in the United States 1956 north-central states: U. S. Geological Survey Water-supply Paper 1456, 76 p.

Maclay, R. W., Bidwell, L. E., and Winter, T. C., 1969, Water resources of the Buffalo River watershed west-central Minnesota: U. S. Geological Survey - Hydrologic Investigations Atlas HA-307, 1 sheet.

McGuinness, C. L., 1969, Ground-water levels in the United States 1962-66 north-central states: U. S. Geological Survey Water-supply Paper 1976, 117 p.

Meinzer, O. E., and L. K. Wenzel, 1938, Water levels and artesian pressure in observation wells in the United States in 1937: U. S. Geological Survey Water-supply Paper 840, 657 p.

Meinzer, O. E., L. K. Wenzel, and others, 1939, Water levels and artesian pressure in observation wells in the United States in 1938: U. S. Geological Survey Water-supply Paper 845, 724 p.

------, 1940, Water levels and artesian pressure in observation wells in the United States in 1939: U. S. Geological Survey Water-supply Paper 886, 933 p.

------, 1942, Water levels and artesian pressure in observation wells in the United States in 1940: Part 3, north-central states, U. S. Geological Survey Water-supply Paper 908, 288 p.

------, 1943, Water levels and artesian pressure in observation wells in the United States in 1941: Part 3, north-central states: U. S. Geological Survey Water-supply Paper 938, 232 p.

------, 1944, Water levels and artesian pressure in observation wells in the United States in 1942: Part 3, north-central states, U. S. Geological Survey Water-supply Paper 946, 278 p.

------, 1946, Water levels and artesian pressure in observation wells in the United States in 1943: Part 3, north-central states, U. S. Geological Survey Water-supply Paper 988, 352 p.
Moore Engineering, Inc., 1975, Engineer's report on test hole drilling, city of West Fargo: West Fargo, North Dakota, 17 p.
------, 1981, West Fargo water supply report: 33 p. North Dakota State Engineer and Garrison Diversion Unit Conservancy District, 1990, Red River Valley municipal water supply study: West Fargo, North Dakota, 22 p.
North Dakota Geological Survey and Works Progress Administration, 193?: WPA Project No. 665-73-3-48: 4 Binders.
North Dakota State Engineer and Garrison Diversion Unit Conservancy District, 1990, Red River Valley municipal water supply study: Bismarck, North Dakota, 22 p.
Olson, J., and Greer, P. L., 1995, Site suitability review of the Fargo landfill: North Dakota Landfill Site Investigation No. 47, 62 p.
Paulsen, C. G., 1948, Water levels and artesian pressure in observation wells in the United States in 1945; Part 3, north-central states: U. S. Geological Survey Water-supply Paper 1025, 260 p.
------, 1949, Water levels and artesian pressure in observation wells in the United States in 1946: Part 3, north-central states, U. S. Geological Survey Water-supply Paper 1073, 366 p.
------, 1951, Water levels and artesian pressure in observation wells in the United States in 1947: Part 3, north-central states, U. S. Geological Survey Water-supply Paper 1098, 351 p.
------, 1951, Water levels and artesian pressure in observation wells in the United States in 1948: Part 3, north-central states, U. S. Geological Survey Water-supply Paper 1128, 325 p.
------, 1952, Water levels and artesian pressure in observation wells in the United States in 1949: Part 3, north-central states, U. S. Geological Survey Water-supply Paper 1158, 436 p.
------, 1952, Water levels and artesian pressure in observation wells in the United States in 1950: Part 3, north-central states, U. S. Geological Survey Water-supply Paper 1167, 198 p.
Sayre, A. N., 1947, Water levels and artesian pressure in observation wells in the United States in 1944: Part 3, north-central states, U. S. Geological Survey Water-supply Paper 1018, 276 p.
------, 1954, Water levels and artesian pressure in observation wells in the United States in 1951: Part 3, north-central states, U. S. Geological Survey Water-supply Paper 1193, 246 p.
------, 1954, Water levels and artesian pressure in observation wells in the United States in 1952: Part 3, north-central states, U. S. Geological Survey Water-supply Paper 1223, 235 p.
------, 1955, Water levels and artesian pressure in observation wells in the United States in 1953: Part 3, north-central states, U. S. Geological Survey Water-supply Paper 1267, 254 p.
------, 1956, Water levels and artesian pressure in observation wells in the United States in 1954: Part 3, north-central states, U. S. Geological Survey Water-supply Paper 1323, 280 p.

------, 1957, Water levels and artesian pressure in observation wells in the United States in 1955: Part 3, north-central states, U. S. Geological Survey Water-supply Paper 1406, 274 p.
Simpson, H. R., 1929, Geology and groundwater resources of North Dakota: U. S. Geological Survey Water Supply Paper 598, 312 p.
Twin City Testing, 1990, Soil boring and monitoring well installation, Fargo landfill sites, Fargo, North Dakota: Fargo, North Dakota, 7 p.
Ulteig Engineers, Inc., 1979, Ground water investigations for Fargo, North Dakota, volume I - report: Fargo, North Dakota, 46 p.
------, 1979, Ground water investigations for Fargo, North Dakota, volume II - geophysical data, test hole logs, electric logs, water quality data: Fargo, North Dakota, 131 p.
------, 1979, Ground water investigations for Fargo, North Dakota, volume III - existing well logs: Fargo, North Dakota, 188 p.
Wolf, R. J., 1981, Hydrogeology of the Buffalo Aquifer, Clay and Wilkin Counties, west-central Minnesota: U. S. Geological Survey -- Water-Resources Investigations 81-4, 83 p.

TABLE 2. TABLE OF WATER LEVELS IN OBSERVATION WELLS AND PIEZOMETERS

135-048-17CCC MP Elev (msl,ft)=934.8

Undefined Aquifer SI (ft.)=152-157

Date	Depth to Water (ft)	WL Elev (msl, ft)	Date	Depth to Water (ft)	WL Elev (msl, ft)	Date	Depth to Water (ft)	WL Elev (msl, ft)	Date	Depth to Water (ft)	WL Elev (msl, ft)
09/12/85	20.25	914.45	07/27/88	18.26	916.44	09/13/90	18.86	915.84	12/07/92	18.78	915.92
10/08/85	18.91	915.79	08/23/88	18.28	916.42	10/08/90	18.97	915.73			
10/22/85	18.78	915.92	09/29/88	18.30	916.40	10/10/90	18.97	915.73	04/13/93	19.24	915.46
10/25/85	18.83	915.87	10/27/88	18.38	916.32	11/08/90	18.87	915.83	05/11/93	19.24	915.46
			11/30/88	18.09	916.61	12/04/90	18.95	915.75	06/15/93	19.14	915.56
10/25/86	18.83	915.87							07/07/93	19.02	915.68
10/28/86	18.34	916.36	01/04/89	17.93	916.77	03/25/91	18.81	915.89	08/10/93	19.14	915.56
11/04/86	18.36	916.34	02/15/89	17.75	916.95	04/30/91	18.68	916.02	09/08/93	19.14	915.56
12/01/86	18.23	916.47	03/15/89	18.08	916.62	05/29/91	18.82	915.88	10/06/93	19.19	915.51
			04/19/89	18.16	916.54	06/26/91	18.90	915.80	11/18/93	19.15	915.55
01/14/87	18.12	916.58	05/16/89	18.20	916.50	07/24/91	18.94	915.76	12/13/93	19.06	915.64
01/28/87	18.09	916.61	06/20/89	18.25	916.45	08/19/91	19.03	915.67			
03/03/87	18.02	916.68	07/18/89	18.39	916.31	09/17/91	17.96	916.74	04/20/94	19.04	915.66
03/24/87	17.93	916.77	08/15/89	18.53	916.17	10/22/91	19.05	915.65	07/29/94	18.87	915.83
07/02/87	18.06	916.64	10/05/89	18.43	916.27	11/25/91	19.09	915.61	10/24/94	18.87	915.83
08/03/87	18.15	916.55	10/24/89	18.45	916.25						
08/31/87	18.26	916.44	12/01/89	18.47	916.23	04/06/92	19.15	915.55	05/15/95	18.43	916.27
10/02/87	18.28	916.42				05/11/92	19.14	915.56	06/14/95	18.59	916.11
11/02/87	18.17	916.53	01/03/90	18.44	916.26	06/08/92	19.19	915.51	07/26/95	18.61	916.09
11/30/87	18.12	916.58	03/29/90	18.49	916.21	07/06/92	19.02	915.68	09/05/95	18.60	916.10
			04/23/90	18.50	916.20	08/03/92	19.26	915.44	10/17/95	18.35	916.35
02/12/88	17.90	916.80	05/21/90	18.54	916.16	08/11/92	19.30	915.40	11/29/95	18.22	916.48
04/22/88	18.04	916.66	06/13/90	18.60	916.10	09/09/92	19.18	915.52			
06/23/88	18.12	916.58	07/16/90	18.78	915.92	10/13/92	19.26	915.44	04/30/96	18.14	916.66
07/01/88	18.20	916.50	08/13/90	18.90	915.80	11/11/92	19.22	915.48	06/05/96	18.05	916.75

135-048-31DCD MP Elev (msl,ft)=936.6

Wahpeton Sand Plain Aquifer SI (ft.)=138-141

Date	Depth to Water (ft)	WL Elev (msl, ft)	Date	Depth to Water (ft)	WL Elev (msl, ft)	Date	Depth to Water (ft)	WL Elev (msl, ft)	Date	Depth to Water (ft)	WL Elev (msl, ft)
07/20/71	9.94	926.66	06/30/76	7.93	928.67	07/27/88	8.03	928.57	10/22/91	9.59	927.01
08/30/71	9.90	926.70	07/21/76	8.04	928.56	08/23/88	8.07	928.53	11/25/91	9.63	926.97
			08/11/76	8.18	928.42	09/29/88	8.14	928.46			
06/26/73	10.17	926.43	08/24/76	8.47	928.13	10/26/88	8.19	928.41	04/06/92	9.70	926.90
09/20/73	8.37	928.23	09/13/76	9.26	927.34	10/27/88	8.19	928.41	05/11/92	9.63	926.97
			09/28/76	8.38	928.22	11/30/88	8.22	928.38	06/08/92	9.48	927.12
06/18/74	8.06	928.54	11/02/76	8.46	928.14				07/06/92	9.49	927.11
07/18/74	8.28	928.32	12/06/76	8.54	928.06	01/04/89	8.23	928.37	08/11/92	9.49	927.11
07/29/74	8.32	928.28				02/15/89	8.19	928.41	09/09/92	9.52	927.08
08/01/74	8.47	928.13	01/04/77	8.53	928.07	03/15/89	7.78	928.82	10/13/92	9.57	927.03
08/05/74	8.35	928.25	04/05/77	8.61	927.99	04/19/89	7.79	928.81	11/11/92	9.61	926.99
08/09/74	8.34	928.26	06/07/77	8.58	928.02	05/16/89	7.88	928.72	12/07/92	9.63	926.97
08/14/74	8.33	928.27	07/06/77	8.55	928.05	06/20/89	7.95	928.65			
08/20/74	8.33	928.27	07/07/77	8.55	928.05	07/18/89	8.05	928.55	04/13/93	9.66	926.94
08/27/74	8.32	928.28	08/10/77	9.75	926.85	08/15/89	8.18	928.42	05/11/93	9.70	926.90
09/05/74	8.35	928.25	09/15/77	8.76	927.84	10/05/89	8.31	928.29	06/15/93	9.46	927.14
09/14/74	8.35	928.25				10/24/89	8.40	928.20	07/07/93	9.44	927.16
09/17/74	8.39	928.21	03/14/78	8.30	928.30	12/01/89	8.53	928.07	08/10/93	9.45	927.15
09/24/74	8.40	928.20	06/22/78	8.12	928.48				09/08/93	9.54	927.06
10/05/74	8.42	928.18	09/21/78	8.10	928.50	01/03/90	8.60	928.00	10/06/93	9.57	927.03
10/09/74	8.41	928.19				03/29/90	8.75	927.85	11/18/93	9.70	926.90
10/18/74	8.41	928.19	10/28/86	8.25	928.35	04/23/90	8.80	927.80	12/13/93	9.79	926.81
10/22/74	8.44	928.16	11/04/86	8.25	928.35	05/21/90	8.74	927.86			
10/30/74	8.46	928.14				06/13/90	8.75	927.85	04/20/94	9.78	926.82
11/06/74	8.43	928.17	01/07/87	8.10	928.50	07/16/90	8.80	927.80	07/29/94	9.84	926.76
11/18/74	8.43	928.17	01/14/87	8.10	928.50	08/13/90	8.88	927.72	10/24/94	9.86	926.74
12/03/74	8.44	928.16	01/28/87	8.10	928.50	09/13/90	8.94	927.66			
			03/03/87	8.00	928.60	10/08/90	9.03	927.57	05/15/95	9.51	927.09
01/22/75	8.71	927.89	03/24/87	7.87	928.73	10/10/90	9.03	927.57	06/14/95	9.50	927.10
02/25/75	8.41	928.19	05/13/87	7.76	928.84	11/08/90	9.07	927.53	07/26/95	9.27	927.33
06/03/75	8.05	928.55	07/02/87	7.65	928.95	12/04/90	9.14	927.46	09/05/95	9.26	927.34
06/18/75	8.03	928.57	08/03/87	7.70	928.90				10/17/95	9.25	927.35
07/15/75	8.00	928.60	08/31/87	7.75	928.85	03/25/91	9.38	927.22	11/29/95	9.20	927.40
07/29/75	7.98	928.62	11/02/87	7.80	928.80	04/30/91	9.40	927.20			
08/25/75	8.04	928.56	11/30/87	7.84	928.76	05/29/91	9.40	927.20	04/30/96	8.82	927.78
						06/26/91	9.40	927.20	06/05/96	8.67	927.93
01/21/76	8.12	928.48	04/22/88	7.93	928.67	07/24/91	9.43	927.17	08/28/96	9.11	927.49
06/02/76	7.86	928.74	06/23/88	7.98	928.62	08/19/91	9.48	927.12	09/24/96	11.56	925.04
06/17/76	7.90	928.70	07/01/88	7.96	928.64	09/17/91	9.54	927.06			

135-050-15DDC MP Elev (msl,ft)=1011.48

Undefined Aquifer SI (ft.)=238-243

Date	Depth to Water (ft)	WL Elev (msl. ft)
09/16/93	29.82	981.66
10/06/93	29.85	981.63
11/18/93	29.84	981.64
12/13/93	29.72	981.76
04/20/94	29.58	981.90
05/18/94	29.45	982.03
06/22/94	29.69	981.79
07/26/94	29.57	981.91
08/25/94	29.70	981.78
09/22/94	29.83	981.65
10/24/94	29.66	981.82
11/17/94	29.49	981.99
12/13/94	29.56	981.92
05/15/95	28.97	982.51
04/30/96	28.69	982.79

136-048-30BBB MP Elev (msl,ft)=927.1

Horace Aquifer SI (ft.)=178-183

Date	Depth to Water (ft)	WL Elev (msl. ft)
07/28/83	44.82	882.28
08/18/83	44.89	882.21
09/15/83	45.07	882.03
10/12/83	45.19	881.91
11/09/83	45.26	881.84
12/15/83	45.28	881.82
04/11/84	45.39	881.71
05/16/84	45.60	881.50
06/22/84	45.71	881.39
07/12/84	45.97	881.13
08/09/84	46.25	880.85
09/12/84	46.60	880.50
10/10/84	46.83	880.27
11/07/84	46.67	880.43
12/05/84	47.00	880.10
04/10/85	47.15	879.95
05/05/85	47.15	879.95
06/08/85	47.30	879.80
07/08/85	47.55	879.55
08/17/85	47.92	879.18
09/22/85	47.00	880.10
10/26/85	48.05	879.05
12/07/85	48.18	878.92
05/10/86	48.31	878.79
06/08/86	48.40	878.70
07/06/86	48.75	878.35
08/02/86	48.90	878.20
08/30/86	48.95	878.15
10/10/86	48.96	878.14
11/01/86	49.22	877.88
12/06/86	49.23	877.87
04/25/87	49.45	877.65
05/30/87	49.53	877.57
06/27/87	49.90	877.20
08/01/87	50.26	876.84
08/29/87	50.47	876.63
09/26/87	50.52	876.58
10/31/87	50.78	876.32
11/28/87	50.83	876.27
12/20/87	50.70	876.40
04/02/88	50.72	876.38
04/30/88	50.76	876.34
05/27/88	50.88	876.22
06/24/88	51.30	875.80
07/22/88	51.73	875.37
08/20/88	51.93	875.17
09/17/88	52.11	874.99
09/21/88	52.18	874.92
10/15/88	52.15	874.95
11/05/88	52.25	874.85
12/10/88	52.41	874.69
04/22/89	52.15	874.95
05/12/89	52.23	874.87
06/03/89	52.39	874.71
06/30/89	52.63	874.47
07/30/89	52.94	874.16
09/10/89	53.39	873.71
09/30/89	53.42	873.68
10/28/89	53.44	873.66
11/19/89	53.40	873.70
05/05/90	53.66	873.44
05/28/90	53.72	873.38
06/29/90	53.88	873.22
08/03/90	54.09	873.01
09/02/90	54.40	872.70
09/29/90	54.58	872.52
10/27/90	54.50	872.60
11/17/90	54.50	872.60
12/08/90	54.43	872.67
03/30/91	54.43	872.67
05/11/91	54.46	872.64
06/01/91	54.42	872.68
07/14/91	54.73	872.37
08/10/91	54.84	872.26
08/31/91	55.03	872.07
09/28/91	55.01	872.09
10/20/91	55.07	872.03
11/17/91	54.97	872.13
12/21/91	55.13	871.97
04/17/92	55.08	872.02
05/20/92	55.25	871.85
06/13/92	55.34	871.76
07/26/92	55.51	871.59
08/27/92	55.63	871.47
09/24/92	55.67	871.43
10/17/92	55.93	871.17
11/11/92	55.76	871.34
12/06/92	55.97	871.13
05/02/93	55.99	871.11
06/05/93	56.08	871.02
08/05/93	56.27	870.83
08/29/93	56.23	870.87
09/25/93	56.25	870.85
10/18/93	56.37	870.73
11/12/93	56.42	870.68
04/16/94	56.53	870.57
05/15/94	56.55	870.55
06/11/94	56.70	870.40
07/24/94	56.94	870.16
08/20/94	57.00	870.10
09/24/94	57.15	869.95
10/29/94	57.05	870.05
11/26/94	57.25	869.85
04/30/95	56.72	870.38
05/28/95	56.96	870.14
07/01/95	57.27	869.83
08/05/95	57.37	869.73
09/09/95	57.62	869.48
10/28/95	57.10	870.00
11/21/95	57.30	869.80
06/04/96	57.14	869.96
06/30/96	57.36	869.74
07/28/96	57.64	869.46
08/25/96	57.77	869.33
09/24/96	58.36	868.74
10/05/96	58.29	868.81
11/02/96	58.37	868.73

136-048-31DDD MP Elev (msl,ft)=932.22

Undefined Aquifer SI (ft.)=325-330

Date	Depth to Water (ft)	WL Elev (msl. ft)
11/17/91	28.17	904.05
12/21/91	28.30	903.92
04/17/92	28.25	903.97
05/20/92	28.28	903.94
06/13/92	28.30	903.92
07/26/92	28.28	903.94
08/27/92	28.43	903.79
09/24/92	28.32	903.90
10/17/92	28.55	903.67
11/11/92	28.47	903.75
12/06/92	28.41	903.81
05/02/93	28.17	904.05
06/05/93	28.12	904.10
08/05/93	27.90	904.32
08/28/93	27.94	904.28
09/25/93	27.92	904.30
10/18/93	28.01	904.21
11/12/93	28.00	904.22
04/16/94	27.74	904.48
05/15/94	27.69	904.53
06/11/94	27.76	904.46
07/24/94	27.74	904.48
08/20/94	27.94	904.28
09/24/94	28.02	904.20
10/29/94	27.94	904.28
11/26/94	28.03	904.19
04/30/95	27.70	904.52
05/28/95	27.61	904.61
07/01/95	27.78	904.44
08/05/95	27.86	904.36
09/09/95	27.97	904.25
10/28/95	27.64	904.58
11/21/95	27.72	904.50
06/04/96	27.35	904.87
06/30/96	27.59	904.63
07/28/96	27.89	904.33
08/25/96	28.13	904.09
10/05/96	28.14	904.08
11/02/96	28.08	904.14

136-049-02ABB MP Elev (msl,ft)=923.96

Horace Aquifer SI (ft.)=138-143

Date	Depth to Water (ft)	WL Elev (msl. ft)	Date	Depth to Water (ft)	WL Elev (msl. ft)	Date	Depth to Water (ft)	WL Elev (msl. ft)	Date	Depth to Water (ft)	WL Elev (msl. ft)
03/17/83	43.28	880.68	10/10/86	49.07	874.89	05/12/89	52.50	871.46	10/17/92	56.26	867.70
04/18/83	43.34	880.62	11/01/86	49.48	874.48	06/03/89	52.89	871.07	11/11/92	56.06	867.90
05/20/83	43.50	880.46	12/01/86	49.12	874.84	06/30/89	53.30	870.66	12/06/92	56.02	867.94
06/22/83	43.95	880.01	12/06/86	49.37	874.59	07/30/89	53.74	870.22			
07/28/83	44.14	879.82				09/10/89	54.12	869.84	05/02/93	56.23	867.73
08/18/83	44.28	879.68	01/07/87	49.22	874.74	09/30/89	53.65	870.31	06/05/93	56.48	867.48
09/15/83	44.45	879.51	01/14/87	49.10	874.86	10/28/89	53.82	870.14	08/05/93	56.69	867.27
10/12/83	44.56	879.40	01/28/87	49.10	874.86	11/19/89	53.55	870.41	08/29/93	56.75	867.21
11/09/83	44.63	879.33	03/03/87	49.34	874.62				09/25/93	56.73	867.23
12/15/83	44.59	879.37	03/24/87	49.14	874.82	05/05/90	53.71	870.25	10/18/93	56.92	867.04
			04/25/87	49.59	874.37	05/28/90	53.94	870.02	11/12/93	56.88	867.08
04/11/84	44.73	879.23	05/30/87	50.04	873.92	06/29/90	54.16	869.80			
05/16/84	45.07	878.89	06/27/87	50.50	873.46	08/03/90	54.54	869.42	04/16/94	57.10	866.86
06/22/84	45.45	878.51	07/02/87	50.40	873.56	10/16/90	54.73	869.23	05/15/94	57.20	866.76
07/12/84	45.73	878.23	08/01/87	50.76	873.20	10/27/90	54.80	869.16	06/11/94	57.55	866.41
08/09/84	46.26	877.70	08/03/87	50.80	873.16	11/17/90	54.62	869.34	07/24/94	57.75	866.21
09/21/84	46.59	877.37	08/29/87	50.89	873.07	12/08/90	54.51	869.45	08/20/94	57.90	866.06
10/10/84	46.79	877.17	08/31/87	51.03	872.93				09/24/94	57.93	866.03
11/07/84	46.45	877.51	09/26/87	50.87	873.09	03/30/91	54.40	869.56	10/29/94	57.75	866.21
12/05/84	45.15	878.81	10/31/87	51.15	872.81	05/11/91	54.47	869.49	11/26/94	57.82	866.14
			11/28/87	50.98	872.98	06/01/91	54.64	869.32			
04/10/85	46.77	877.19	12/20/87	50.85	873.11	07/14/91	54.92	869.04	04/30/95	58.04	865.92
05/05/85	46.85	877.11				08/10/91	55.16	868.80	05/28/95	58.03	865.93
06/08/85	47.14	876.82	04/02/88	50.77	873.19	08/31/91	55.50	868.46	07/01/95	58.67	865.29
07/08/85	47.55	876.41	04/30/88	51.00	872.96	09/28/91	55.36	868.60	08/05/95	58.60	865.36
08/17/85	48.03	875.93	05/27/88	51.34	872.62	10/20/91	55.36	868.60	09/09/95	58.88	865.08
09/22/85	47.89	876.07	06/24/88	52.04	871.92	11/17/91	55.09	868.87	10/28/95	58.55	865.41
10/26/85	48.00	875.96	07/22/88	52.49	871.47	12/21/91	55.79	868.17	11/21/95	58.64	865.32
12/07/85	48.04	875.92	08/20/88	52.77	871.19						
			09/17/88	52.98	870.98	04/17/92	55.04	868.92	06/04/96	58.47	865.49
05/10/86	48.36	875.60	10/15/88	52.80	871.16	05/20/92	55.40	868.56	06/30/96	58.99	864.97
06/08/86	48.75	875.21	11/05/88	52.89	871.07	06/13/92	55.63	868.33	07/28/96	59.40	864.56
07/05/86	49.10	874.86	12/10/88	52.79	871.17	07/26/92	55.82	868.14	08/25/96	59.50	864.46
08/02/86	49.16	874.80				08/27/92	56.06	867.90	10/05/96	59.10	864.86
08/30/86	49.09	874.87	04/22/89	52.30	871.66	09/24/92	55.92	868.04	11/02/96	59.19	864.77

136-049-03CCD MP Elev (msl,ft)=925.7

Horace Aquifer SI (ft.)=198-203

Date	Depth to Water (ft)	WL Elev (msl. ft)	Date	Depth to Water (ft)	WL Elev (msl. ft)	Date	Depth to Water (ft)	WL Elev (msl. ft)	Date	Depth to Water (ft)	WL Elev (msl. ft)
07/28/83	44.37	881.33	12/06/86	49.78	875.92	06/30/89	53.11	872.59	10/17/92	56.15	869.55
08/16/83	44.36	881.34				07/30/89	53.63	872.07	11/11/92	55.92	869.78
09/15/83	44.53	881.17	01/07/87	49.42	876.28	09/10/89	54.04	871.66	12/06/92	55.94	869.76
10/12/83	44.83	880.87	01/14/87	49.33	876.37	09/30/89	53.80	871.90			
11/09/83	44.92	880.78	01/28/87	49.34	876.36	10/28/89	53.80	871.90	05/02/93	56.03	869.67
12/15/83	44.93	880.77	03/03/87	49.46	876.24	11/19/89	53.80	871.90	06/05/93	56.17	869.53
			03/24/87	49.34	876.36				08/05/93	56.32	869.38
04/11/84	45.17	880.53	04/24/87	49.84	875.86	05/05/90	53.87	871.83	08/29/93	56.45	869.25
05/16/84	45.47	880.23	05/30/87	49.92	875.78	05/28/90	53.93	871.77	09/25/93	56.46	869.24
06/22/84	45.69	880.01	06/27/87	50.40	875.30	06/29/90	54.09	871.61	10/18/93	56.60	869.10
07/12/84	46.07	879.63	07/02/87	50.35	875.35	08/03/90	54.47	871.23	11/12/93	56.56	869.14
08/09/84	46.52	879.18	08/01/87	50.65	875.05	09/02/90	54.83	870.87			
09/12/84	46.99	878.71	08/03/87	50.73	874.97	09/29/90	54.99	870.71	04/16/94	56.64	869.06
10/10/84	47.67	878.03	08/29/87	50.91	874.79	10/27/90	54.86	870.84	05/15/94	56.68	869.02
11/07/84	46.80	878.90	08/31/87	50.98	874.72	11/17/90	54.77	870.93	06/11/94	56.97	868.73
12/05/84	47.14	878.56	09/26/87	50.96	874.74	12/08/90	54.74	870.96	07/24/94	57.01	868.69
			10/31/87	51.19	874.51				08/20/94	57.32	868.38
04/10/85	47.30	878.40	11/28/87	51.18	874.52	03/30/91	54.57	871.13	09/24/94	57.38	868.32
05/05/85	47.40	878.30	12/20/87	51.03	874.67	05/11/91	54.58	871.12	10/29/94	57.16	868.54
06/08/85	47.50	878.20				06/01/91	54.65	871.05	11/26/94	57.26	868.44
07/08/85	47.87	877.83	04/02/88	51.10	874.60	07/14/91	54.91	870.79			
08/17/85	48.31	877.39	04/30/88	51.26	874.44	08/10/91	55.13	870.57	04/30/95	57.40	868.30
09/22/85	48.22	877.48	05/27/88	51.41	874.29	08/31/91	55.32	870.38	05/28/95	57.38	868.32
10/26/85	48.38	877.32	06/24/88	51.95	873.75	09/28/91	55.65	870.05	07/01/95	57.85	867.85
12/07/85	48.18	877.52	07/22/88	52.29	873.41	10/20/91	55.36	870.34	08/05/95	58.00	867.70
			08/20/88	52.59	873.11	11/17/91	55.20	870.50	09/09/95	58.18	867.52
05/10/86	48.59	877.11	09/17/88	52.83	872.87	12/21/91	55.35	870.35	10/28/95	57.84	867.86
06/08/86	48.93	876.77	10/15/88	52.80	872.90				11/21/95	58.02	867.68
07/05/86	49.25	876.45	11/05/88	52.83	872.87	04/17/92	55.24	870.46			
08/02/86	49.34	876.36	12/10/88	52.85	872.85	05/20/92	55.44	870.26	06/04/96	57.73	867.97
08/30/86	49.36	876.34				06/13/92	55.57	870.13	06/30/96	58.10	867.60
10/10/86	49.21	876.49	04/22/89	52.29	873.41	07/26/92	55.79	869.91	07/28/96	58.55	867.15
11/01/86	49.59	876.11	05/12/89	52.50	873.20	08/27/92	55.89	869.81	08/25/96	58.72	866.98
12/01/86	49.34	876.36	06/03/89	52.82	872.88	09/24/92	55.79	869.91	10/05/96	58.30	867.40

136-049-24CCC1 MP Elev (msl,ft)=925.7

Horace Aquifer SI (ft.)=178-181

Date	Depth to Water (ft)	WL Elev (msl. ft)	Date	Depth to Water (ft)	WL Elev (msl. ft)	Date	Depth to Water (ft)	WL Elev (msl. ft)	Date	Depth to Water (ft)	WL Elev (msl. ft)
07/28/83	43.78	881.92	12/06/86	48.43	877.27	06/03/89	51.72	873.98	09/24/92	54.86	870.84
08/18/83	43.91	881.79				06/30/89	52.07	873.63	10/17/92	55.32	870.38
09/15/83	44.00	881.70	01/07/87	48.26	877.44	07/30/89	52.60	873.10	11/11/92	55.01	870.69
10/12/83	44.14	881.56	01/14/87	48.10	877.60	09/10/89	53.00	872.70	12/06/92	55.13	870.57
11/09/83	44.24	881.46	01/28/87	48.10	877.60	09/30/89	52.58	873.12			
12/15/83	44.19	881.51	03/03/87	48.33	877.37	10/28/89	52.78	872.92	05/02/93	55.30	870.40
			03/24/87	48.08	877.62	11/19/89	52.52	873.18	06/05/93	55.35	870.35
04/11/84	44.30	881.40	04/25/87	48.64	877.06				08/05/93	55.63	870.07
05/16/84	44.61	881.09	05/30/87	48.80	876.90	05/05/90	53.02	872.68	08/29/93	55.62	870.08
06/22/84	44.75	880.95	06/27/87	49.39	876.31	05/28/90	53.10	872.60	09/25/93	55.56	870.14
07/12/84	45.10	880.60	07/02/87	49.23	876.47	06/29/90	53.32	872.38	10/18/93	55.78	869.92
08/09/84	45.55	880.15	08/01/87	49.40	876.30	08/03/90	53.84	871.86	11/12/93	55.83	869.87
09/12/84	45.72	879.98	08/03/87	49.54	876.16	09/02/90	54.08	871.62			
10/10/84	46.02	879.68	08/29/87	49.72	875.98	09/29/90	54.22	871.48	04/16/94	55.98	869.72
11/07/84	45.67	880.03	08/31/87	49.83	875.87	10/27/90	54.05	871.65	05/15/94	56.09	869.61
12/05/84	46.05	879.65	09/26/87	49.73	875.97	11/17/90	53.85	871.85	06/11/94	56.30	869.40
			10/31/87	50.07	875.63	12/08/90	53.73	871.97	07/24/94	56.46	869.24
04/10/85	46.11	879.59	11/28/87	50.06	875.64				08/20/94	56.55	869.15
05/05/85	46.09	879.61	12/20/87	49.94	875.76	03/30/91	53.77	871.93	09/24/94	56.71	868.99
06/08/85	46.26	879.44				05/11/91	53.92	871.78	10/29/94	56.51	869.19
07/08/85	46.65	879.05	04/02/88	49.83	875.87	06/01/91	53.87	871.83	11/26/94	56.60	869.10
08/17/85	47.11	878.59	04/30/88	50.09	875.61	07/14/91	54.22	871.48			
09/22/85	46.94	878.76	05/27/88	50.21	875.49	08/10/91	54.43	871.27	04/30/95	56.94	868.76
10/26/85	47.15	878.55	06/24/88	50.72	874.98	08/31/91	54.69	871.01	05/28/95	56.75	868.95
12/07/85	47.18	878.52	07/22/88	51.37	874.33	09/28/91	54.52	871.18	07/01/95	57.20	868.50
			08/20/88	51.44	874.26	10/20/91	54.43	871.27	08/05/95	57.17	868.53
05/10/86	47.42	878.28	09/17/88	51.67	874.03	11/17/91	54.26	871.44	09/09/95	57.51	868.19
06/08/86	47.78	877.92	09/21/88	51.79	873.91	12/21/91	54.59	871.11	10/28/95	57.10	868.60
07/05/86	47.85	877.85	10/15/88	50.46	875.24				11/21/95	57.37	868.33
08/02/86	48.15	877.55	11/05/88	51.52	874.18	04/17/92	54.23	871.47			
08/30/86	48.08	877.62	12/10/88	51.88	873.82	05/20/92	54.57	871.13	06/04/96	57.03	868.67
10/01/86	48.18	877.52				06/13/92	54.72	870.98	06/30/96	56.48	868.42
10/10/86	48.05	877.65	04/22/89	51.17	874.53	07/26/92	54.91	870.79	09/24/96	57.87	867.83
11/01/86	48.54	877.16	05/17/89	51.59	874.11	08/27/92	55.03	870.67	10/05/96	57.60	868.10

136-049-26BAA MP Elev (msl,ft)=929

Horace Aquifer SI (ft.)=93-98

Date	Depth to Water (ft)	WL Elev (msl. ft)	Date	Depth to Water (ft)	WL Elev (msl. ft)	Date	Depth to Water (ft)	WL Elev (msl. ft)	Date	Depth to Water (ft)	WL Elev (msl. ft)
06/28/83	46.54	882.46	11/01/86	50.63	878.37	10/28/89	55.08	873.92			
07/28/83	46.43	882.57	12/06/86	50.45	878.55	11/19/89	54.58	874.42	05/02/93	58.54	870.46
08/18/83	46.75	882.25							06/05/93	57.65	871.35
09/15/83	47.34	881.66	04/25/87	50.99	878.01	05/05/90	55.30	873.70	08/05/93	57.71	871.29
10/12/83	46.35	882.65	05/30/87	51.32	877.68	05/28/90	55.75	873.25	08/29/93	57.81	871.19
11/09/83	46.51	882.49	06/27/87	52.61	876.39	06/29/90	55.90	873.10	09/25/93	57.98	871.02
12/15/83	46.43	882.57	08/01/87	52.29	876.71	08/03/90	57.93	871.07	10/18/93	58.39	870.61
			08/29/87	52.59	876.41	09/02/90	56.83	872.17	11/12/93	57.84	871.16
04/11/84	46.67	882.33	09/26/87	52.26	876.74	09/29/90	56.68	872.32			
05/16/84	46.88	882.12	10/31/87	52.41	876.59	10/27/90	56.36	872.64	04/16/94	58.06	870.94
06/22/84	47.21	881.79	11/28/87	52.53	876.47	11/17/90	56.25	872.75	05/15/94	58.57	870.43
07/12/84	47.80	881.20	12/20/87	52.62	876.38	12/08/90	56.10	872.90	06/11/94	59.33	869.67
08/09/84	48.02	880.98							07/24/94	58.46	870.54
09/12/84	47.97	881.03	04/02/88	52.27	876.73	03/30/91	56.16	872.84	08/20/94	58.64	870.36
10/10/84	48.25	880.75	04/30/88	52.97	876.03	05/11/91	56.79	872.21	09/24/94	58.98	870.02
11/07/84	47.80	881.20	05/27/88	52.88	876.12	06/01/91	56.49	872.51	10/29/94	58.41	870.59
12/05/84	48.08	880.92	06/24/88	53.46	875.54	07/14/91	56.52	872.48	11/26/94	58.50	870.50
			07/22/88	54.75	874.25	08/10/91	57.80	871.20			
04/10/85	48.21	880.79	08/20/88	54.49	874.51	08/31/91	57.83	871.17	04/30/95	58.87	870.13
05/05/85	48.45	880.55	09/15/88	54.94	874.06	09/28/91	57.03	871.97	05/28/95	58.95	870.05
06/08/85	48.05	880.95	09/17/88	55.42	873.58	10/20/91	56.80	872.20	07/01/95	59.68	869.32
07/08/85	48.95	880.05	09/21/88	54.14	874.86	11/17/91	56.90	872.10	08/05/95	59.52	869.48
08/17/85	49.30	879.70	10/15/88	53.53	875.47	12/21/91	57.07	871.93	09/09/95	59.49	869.51
09/22/85	48.94	880.06	11/05/88	53.57	875.43				10/28/95	58.79	870.21
10/26/85	49.14	879.86	12/10/88	53.88	875.12	04/17/92	56.39	872.61	11/21/95	59.66	869.34
12/07/85	49.53	879.47				05/20/92	57.12	871.88			
			04/22/89	53.48	875.52	06/13/92	57.70	871.30	06/04/96	58.83	870.17
05/10/86	49.44	879.56	05/17/89	54.41	874.59	07/26/92	57.45	871.55	06/30/96	59.57	869.43
06/08/86	50.31	878.69	06/03/89	54.37	874.63	08/27/92	57.42	871.58	07/28/96	59.94	869.06
07/05/86	50.33	878.67	06/30/89	55.06	873.94	09/24/92	57.00	872.00	08/25/96	60.59	868.41
08/02/86	50.21	878.79	07/30/89	55.58	873.42	10/17/92	57.40	871.60	10/05/96	59.62	869.38
08/30/86	50.00	879.00	09/10/89	56.27	872.73	11/11/92	56.98	872.02	11/02/96	59.32	869.68
10/10/86	50.07	878.93	09/30/89	56.16	872.84	12/06/92	57.20	871.80	11/13/96	59.92	869.08

137-049-03BDD MP Elev (msl,ft)=913

West Fargo South Aquifer Sl (ft.)=0-224

Date	Depth to Water (ft)	WL Elev (msl, ft)
04/18/83	52.79	860.21
06/22/83	58.48	854.52
07/28/83	59.39	853.61
08/18/83	60.78	852.22
10/12/83	56.50	856.50
11/08/83	56.51	856.49
05/16/84	62.27	850.73
08/09/84	68.97	844.03
09/12/84	65.72	847.28
10/10/84	63.77	849.23
11/07/84	66.58	846.42
05/05/85	67.02	845.98
06/08/85	65.99	847.01
07/08/85	70.02	842.98
08/17/85	66.49	846.51
09/22/85	69.45	843.55
10/26/85	66.83	846.17
12/07/85	64.72	848.28
05/10/86	67.13	845.87
06/08/86	72.46	840.54
07/05/86	70.60	842.40
08/01/86	70.50	842.50
08/30/86	70.80	842.20
10/10/86	70.66	842.34
11/01/86	68.83	844.17
12/06/86	69.61	843.39
04/25/87	73.70	839.30
05/30/87	79.09	833.91
06/27/87	79.73	833.27
08/01/87	78.70	834.30
08/29/87	75.45	837.55
09/26/87	74.31	838.69
10/31/87	73.77	839.23
11/28/87	72.57	840.43
12/19/87	70.75	842.25
04/02/88	71.19	841.81
04/30/88	77.54	835.46
05/27/88	80.70	832.30
06/24/88	82.08	830.92
07/22/88	82.14	830.86
08/20/88	80.25	832.75
09/17/88	81.57	831.43
10/15/88	78.65	834.35
11/05/88	75.12	837.88
12/10/88	74.25	838.75
04/22/89	72.48	840.52
05/12/89	77.73	835.27
06/03/89	78.05	834.95
06/30/89	79.69	833.31
07/30/89	85.88	827.12
09/09/89	80.55	832.45
09/30/89	80.48	832.52
10/28/89	77.36	835.64
11/19/89	75.50	837.50
05/05/90	76.93	836.07
05/28/90	79.10	833.90
06/29/90	79.14	833.86
08/03/90	84.90	828.10
09/01/90	84.17	828.83
09/29/90	79.32	833.68
10/27/90	77.02	835.98
11/17/90	76.06	836.94
12/08/90	75.67	837.33
03/29/91	75.35	837.65
05/10/91	76.75	836.25
06/01/91	79.76	833.24
08/10/91	81.97	831.03
08/31/91	83.25	829.75
09/28/91	81.25	831.75
10/20/91	79.42	833.58
11/17/91	79.20	833.80
12/20/91	78.05	834.95
04/17/92	77.05	835.95
05/20/92	82.68	830.32
06/13/92	85.03	827.97
07/26/92	82.83	830.17
08/27/92	85.03	827.97
09/24/92	83.24	829.76
10/17/92	83.26	829.74
12/06/92	80.68	832.32
05/02/93	81.26	831.74
06/05/93	86.81	826.19
08/05/93	84.32	828.68
08/28/93	86.97	826.03
09/25/93	86.47	826.53
10/18/93	86.02	826.98
11/12/93	84.46	828.54
04/16/94	85.63	827.37
05/15/94	87.80	825.20
06/11/94	92.90	820.10
07/24/94	89.70	823.30
08/20/94	90.41	822.59
09/24/94	87.78	825.22
10/28/94	86.47	826.53
11/26/94	87.50	825.50
04/30/95	88.66	824.34
05/28/95	88.97	824.03
07/01/95	94.94	818.06
08/05/95	93.81	819.19
09/09/95	90.72	822.28
10/28/95	87.12	825.88
11/21/95	86.73	826.27
06/04/96	90.28	822.72
06/30/96	93.95	819.05
07/28/96	93.45	819.55
08/24/96	95.09	817.91
10/05/96	90.57	822.43

137-049-06CCD MP Elev (msl,ft)=920.3

West Pleasant Aquifer Sl (ft.)=95-100

Date	Depth to Water (ft)	WL Elev (msl, ft)
11/27/79	38.44	881.86
04/09/80	38.30	882.00
05/22/80	38.63	881.67
06/20/80	38.65	881.65
07/16/80	38.91	881.39
08/13/80	38.97	881.33
09/09/80	39.12	881.18
10/08/80	38.95	881.35
11/18/80	38.98	881.32
04/27/81	38.97	881.33
06/09/81	39.23	881.07
09/02/81	39.10	881.20
10/08/81	39.17	881.13
12/03/81	39.38	880.92
05/20/82	39.20	881.10
06/30/82	39.49	880.81
08/24/82	40.06	880.24
08/25/82	40.05	880.25
10/30/82	39.63	880.67
11/18/82	39.79	880.51
11/21/82	39.65	880.65
04/18/83	39.78	880.52
06/22/83	40.08	880.22
07/28/83	40.22	880.08
08/18/83	41.32	878.98
09/15/83	40.48	879.82
10/12/83	40.66	879.64
11/09/83	40.85	879.45
12/15/83	40.99	879.31
04/11/84	41.57	878.73
05/16/84	41.96	878.34
06/22/84	42.18	878.12
07/12/84	42.54	877.76
08/09/84	43.10	877.20
09/12/84	44.62	875.68
10/10/84	43.97	876.33
11/07/84	43.72	876.58
12/05/84	44.10	876.20
04/10/85	44.51	875.79
05/05/85	44.70	875.60
06/08/85	44.67	875.63
07/08/85	44.97	875.33
08/17/85	45.48	874.82
09/22/85	45.40	874.90
10/26/85	45.62	874.68
06/08/86	45.84	874.46
07/05/86	46.08	874.22
08/02/86	46.07	874.23
08/30/86	46.19	874.11
10/10/86	46.18	874.12
11/01/86	46.48	873.82
12/06/86	46.47	873.83
04/25/87	46.63	873.67
06/27/87	46.91	873.39
08/01/87	47.23	873.07
08/29/87	47.42	872.88
09/26/87	47.53	872.77
10/31/87	47.86	872.44
11/28/87	47.93	872.37
12/19/87	47.85	872.45
04/02/88	47.79	872.51
04/30/88	48.17	872.13
05/27/88	48.23	872.07
06/24/88	47.79	872.51
07/22/88	48.87	871.43
08/20/88	49.05	871.25
09/15/88	49.33	870.97
09/17/88	49.29	871.01
10/15/88	49.25	871.05
11/05/88	49.29	871.01
12/10/88	49.47	870.83
04/22/89	49.21	871.09
05/12/89	49.48	870.82
06/03/89	49.42	870.88
06/30/89	49.64	870.66
07/30/89	49.94	870.36
09/10/89	50.05	870.25
09/30/89	49.99	870.31
10/28/89	50.08	870.22
11/19/89	50.13	870.17
05/05/90	49.90	870.40
05/28/90	50.08	870.22
06/30/90	49.81	870.49
08/03/90	50.22	870.08
09/02/90	50.29	870.01
09/29/90	50.45	869.85
10/27/90	50.25	870.05
11/17/90	50.44	869.86
12/08/90	50.49	869.81
03/29/91	50.44	869.86
05/11/91	50.30	870.00
06/01/91	50.34	869.96
07/13/91	50.42	869.88
08/10/91	50.70	869.60
08/31/91	50.76	869.54
09/28/91	50.81	869.49
10/20/91	50.93	869.37
11/17/91	50.82	869.48
12/20/91	51.02	869.28
04/17/92	51.14	869.16
05/20/92	51.29	869.01
06/13/92	51.49	868.81
07/26/92	51.41	868.89
08/27/92	51.41	868.89
09/24/92	51.31	868.99
10/17/92	51.56	868.74
12/06/92	51.47	868.83
05/02/93	51.58	868.72
06/05/93	51.57	868.73
08/05/93	51.41	868.89
08/29/93	51.52	868.78
09/25/93	51.66	868.64
10/18/93	51.80	868.50
11/12/93	51.83	868.47
04/16/94	52.47	867.83
05/15/94	52.11	868.19
06/11/94	52.33	867.97
07/24/94	52.33	867.97
08/20/94	52.47	867.83
09/24/94	52.42	867.88
10/29/94	52.37	867.93
11/26/94	52.44	867.86
04/30/95	52.67	867.63
05/28/95	52.64	867.66
07/01/95	52.96	867.34
08/05/95	53.00	867.30
09/09/95	53.16	867.14
10/28/95	52.90	867.40
11/21/95	52.95	867.35
06/04/96	52.66	867.64
06/30/96	52.82	867.48
07/28/96	53.15	867.15
08/25/96	53.33	866.97
10/05/96	53.20	867.10
11/02/96	53.14	867.16

137-049-08CCC MP Elev (msl,ft)=920.9

Horace Aquifer SI (ft.)=258-264

Date	Depth to Water (ft)	WL Elev (msl, ft)	Date	Depth to Water (ft)	WL Elev (msl, ft)	Date	Depth to Water (ft)	WL Elev (msl, ft)	Date	Depth to Water (ft)	WL Elev (msl, ft)
11/27/79	46.79	874.11	09/08/81	48.53	872.37	08/18/83	50.34	870.56	05/05/85	56.21	864.69
			10/08/81	48.42	872.48	09/15/83	50.70	870.20	06/08/85	56.16	864.74
03/25/80	46.95	873.95	12/03/81	48.47	872.43	10/12/83	50.35	870.55	07/08/85	56.85	864.05
04/09/80	46.83	874.07				11/09/83	51.35	869.55	08/17/85	57.45	863.45
05/22/80	47.66	873.24	05/20/82	48.51	872.39	12/15/83	51.57	869.33	09/22/85	57.34	863.56
06/24/80	47.80	873.10	06/30/82	49.14	871.76				10/26/85	57.42	863.48
07/16/80	47.75	873.15	08/24/82	49.89	871.01	04/11/84	52.45	868.45	12/07/85	57.21	863.69
08/13/80	46.82	874.08	08/26/82	49.87	871.03	05/16/84	52.82	868.08			
09/09/80	48.15	872.75	10/30/82	49.16	871.74	06/22/84	53.56	867.34	05/10/86	57.35	863.55
10/08/80	47.80	873.10	11/18/82	49.20	871.70	07/12/84	54.10	866.80	06/08/86	57.92	862.98
11/18/80	46.95	873.95	11/21/82	49.14	871.76	08/09/84	55.15	865.75	07/05/86	58.28	862.62
						09/12/84	55.59	865.31	08/02/86	58.29	862.61
02/23/81	47.81	873.09	03/17/83	49.06	871.84	10/10/84	55.79	865.11	08/30/86	58.50	862.40
04/27/81	47.82	873.08	04/18/83	49.15	871.75	11/07/84	55.35	865.55	10/10/86	58.42	862.48
06/09/81	48.48	872.42	05/20/83	49.36	871.54	12/05/84	55.71	865.19	11/01/86	58.47	862.43
07/22/81	48.35	872.55	06/22/83	49.64	871.26						
09/02/81	48.39	872.51	07/29/83	50.00	870.90	04/10/85	55.97	864.93			

137-049-12AAA2 MP Elev (msl,ft)=912.68

Undefined Aquifer SI (ft.)=178-183

Date	Depth to Water (ft)	WL Elev (msl, ft)	Date	Depth to Water (ft)	WL Elev (msl, ft)	Date	Depth to Water (ft)	WL Elev (msl, ft)	Date	Depth to Water (ft)	WL Elev (msl, ft)
11/12/93	39.42	873.26	08/20/94	41.36	871.32	05/28/95	55.66	857.02			
			09/24/94	41.44	871.24	07/01/95	59.10	853.58	06/04/96	57.98	854.70
04/16/94	39.25	873.43	10/28/94	41.15	871.53	08/05/95	47.70	864.98	06/30/96	60.57	852.11
05/15/94	54.83	857.85	11/26/94	40.42	872.26	09/09/95	45.80	866.88	07/28/96	48.46	864.22
06/11/94	49.76	862.92				10/27/95	41.90	870.78	08/24/96	45.02	867.66
07/24/94	42.77	869.91	04/30/95	40.07	872.61	11/21/95	41.29	871.39	10/05/96	43.27	869.41

137-049-12CCC MP Elev (msl,ft)=915.32

Horace Aquifer SI (ft.)=190-195

Date	Depth to Water (ft)	WL Elev (msl, ft)	Date	Depth to Water (ft)	WL Elev (msl, ft)	Date	Depth to Water (ft)	WL Elev (msl, ft)	Date	Depth to Water (ft)	WL Elev (msl, ft)
12/20/91	54.62	860.70	05/01/93	56.19	859.13	07/24/94	59.11	856.21	10/27/95	59.22	856.10
			06/05/93	57.13	858.19	08/20/94	59.59	855.73	11/21/95	59.33	855.99
04/17/92	54.23	861.09	08/05/93	57.10	858.22	09/24/94	59.24	856.08			
05/20/92	55.46	859.86	08/28/93	57.37	857.95	10/28/94	58.66	856.66	06/04/96	59.46	855.86
06/13/92	56.23	859.09	09/25/93	57.74	857.58	11/26/94	58.60	856.72	06/30/96	61.00	854.32
07/26/92	56.03	859.29	10/18/93	57.67	857.65				07/28/96	62.25	853.07
08/27/92	56.80	858.52	11/12/93	57.43	857.89	04/30/95	58.80	856.52	08/24/96	62.39	852.93
09/24/92	56.37	858.95				05/28/95	59.30	856.02	10/05/96	61.27	854.05
10/17/92	56.55	858.77	04/16/94	57.41	857.91	07/01/95	61.44	853.88	11/02/96	60.95	854.37
12/06/92	56.00	859.32	05/15/94	57.82	857.50	08/05/95	60.90	854.42			
			06/11/94	59.73	855.59	09/09/95	61.12	854.20			

137-049-14BAA MP Elev (msl,ft)=911.65

Horace Aquifer SI (ft.)=178-183

Date	Depth to Water (ft)	WL Elev (msl, ft)	Date	Depth to Water (ft)	WL Elev (msl, ft)	Date	Depth to Water (ft)	WL Elev (msl, ft)	Date	Depth to Water (ft)	WL Elev (msl, ft)
11/17/91	51.37	860.28				06/11/94	56.33	855.32	09/09/95	57.63	854.02
12/20/91	51.23	860.42	05/02/93	52.70	858.95	07/24/94	55.45	856.20	10/28/95	56.19	855.46
			06/05/93	53.73	857.92	08/20/94	56.18	855.47	11/21/95	55.94	855.71
04/17/92	50.79	860.86	08/05/93	53.61	858.04	09/24/94	55.79	855.86			
05/20/92	52.04	859.61	08/29/93	53.97	857.68	10/29/94	55.30	856.35	06/04/96	56.06	855.59
06/13/92	52.79	858.86	09/25/93	54.28	857.37	11/26/94	55.24	856.41	06/30/96	57.60	854.05
07/26/92	52.61	859.04	10/18/93	54.23	857.42				07/28/96	58.85	852.80
08/27/92	53.39	858.26	11/12/93	53.97	857.68	04/30/95	55.41	856.24	08/25/96	59.03	852.62
09/24/92	52.93	858.72				05/28/95	55.92	855.73	10/05/96	57.85	853.80
10/17/92	53.10	858.55	04/16/94	53.97	857.68	07/01/95	58.04	853.61	11/02/96	57.03	854.62
12/06/92	52.30	859.35	05/15/94	54.39	857.26	08/05/95	57.46	854.19			

137-049-14BBB1 MP Elev (msl,ft)=915.64

Horace Aquifer SI (ft.)=178-183

Date	Depth to Water (ft)	WL Elev (msl, ft)	Date	Depth to Water (ft)	WL Elev (msl, ft)	Date	Depth to Water (ft)	WL Elev (msl, ft)	Date	Depth to Water (ft)	WL Elev (msl, ft)
11/17/91	55.98	859.66	12/06/92	57.18	858.46	05/15/94	59.07	856.57	08/05/95	62.24	853.40
12/20/91	55.80	859.84				06/11/94	61.08	854.56	09/09/95	62.37	853.27
			05/02/93	57.36	858.28	07/24/94	60.42	855.22	10/28/95	60.67	854.97
04/17/92	55.17	860.47	06/05/93	58.45	857.19	08/20/94	60.40	855.24	11/21/95	60.38	855.26
05/20/92	56.71	858.93	08/05/93	58.29	857.35	09/24/94	60.53	855.11			
06/13/92	57.47	858.17	08/29/93	58.68	856.96	10/28/94	60.02	855.62	06/04/96	60.52	855.12
07/26/92	57.27	858.37	09/25/93	59.02	856.62	11/26/94	59.80	855.84	06/30/96	62.16	853.48
08/27/92	58.09	857.55	10/18/93	58.93	856.71				07/28/96	63.44	852.20
09/24/92	57.62	858.02	11/12/93	59.18	856.46	04/30/95	60.12	855.52	08/25/96	63.60	852.04
10/17/92	57.79	857.85				05/28/95	60.67	854.97	10/05/96	62.40	853.24
11/11/92	57.46	858.18	04/16/94	59.16	856.48	07/01/95	62.74	852.90	11/02/96	61.54	854.10

137-049-15BAA MP Elev (msl,ft)=914.8

West Fargo South Aquifer SI (ft.)=198-203

Date	Depth to Water (ft)	WL Elev (msl, ft)	Date	Depth to Water (ft)	WL Elev (msl, ft)	Date	Depth to Water (ft)	WL Elev (msl, ft)	Date	Depth to Water (ft)	WL Elev (msl, ft)
10/27/82	47.86	866.94	08/02/86	61.18	853.62	05/12/89	64.30	850.50	10/17/92	70.74	844.06
11/18/82	47.83	866.97	08/30/86	61.05	853.75	06/03/89	65.90	848.90	11/11/92	70.15	844.65
			10/10/86	60.50	854.30	06/30/89	68.36	846.44	12/06/92	69.46	845.34
03/17/83	48.07	866.73	11/01/86	60.73	854.07	07/30/89	71.87	842.93			
04/18/83	48.05	866.75	12/01/86	60.00	854.80	09/10/89	69.44	845.36	05/02/93	70.73	844.07
05/20/83	48.82	865.98	12/06/86	60.35	854.45	09/30/89	67.76	847.04	06/05/93	71.85	842.95
06/22/83	51.27	863.53				10/28/89	66.89	847.91	08/05/93	71.37	843.43
07/29/83	51.30	863.50	01/07/87	59.97	854.83	11/19/89	66.02	848.78	08/29/93	71.80	843.00
08/18/83	52.77	862.03	01/14/87	60.13	854.67				09/25/93	72.40	842.40
09/15/83	52.22	862.58	01/28/87	60.60	854.20	05/05/90	65.80	849.00	10/18/93	72.30	842.50
10/12/83	50.90	863.90	03/03/87	60.66	854.14	05/28/90	66.80	848.00	11/12/93	71.82	842.98
11/09/83	50.65	864.15	03/24/87	60.85	853.95	06/29/90	67.47	847.33			
12/15/83	50.36	864.44	04/25/87	61.88	852.92	08/03/90	69.73	845.07	04/16/94	71.76	843.04
			05/30/87	64.34	850.46	09/02/90	70.73	844.07	05/15/94	72.58	842.22
04/11/84	51.80	863.00	06/27/87	66.17	848.63	09/29/90	69.23	845.57	06/11/94	75.70	839.10
05/16/84	53.38	861.42	08/01/87	66.18	848.62	10/27/90	67.40	847.40	07/24/94	74.89	839.91
06/22/84	54.64	860.16	08/03/87	65.98	848.82	11/17/90	66.33	848.47	08/20/94	75.29	839.51
07/12/84	55.78	859.02	08/29/87	65.17	849.63	12/08/90	66.16	848.64	09/24/94	75.68	839.12
08/09/84	58.25	856.55	09/26/87	64.53	850.27				10/29/94	73.95	840.85
09/12/84	58.02	856.78	10/31/87	63.97	850.83	03/29/91	65.47	849.33	11/26/94	73.79	841.01
10/10/84	56.80	858.00	11/28/87	62.72	852.08	05/11/91	66.07	848.73			
11/07/84	57.10	857.70	12/19/87	61.64	853.16	06/01/91	67.66	847.14	04/30/95	73.94	840.86
12/05/84	55.80	859.00				07/13/91	67.78	847.02	05/28/95	74.86	839.94
			04/02/88	60.93	853.87	08/10/91	68.91	845.89	07/01/95	78.15	836.65
04/10/85	54.87	859.93	04/30/88	63.27	851.53	08/31/91	70.29	844.51	08/05/95	77.00	837.80
05/05/85	56.67	858.13	05/27/88	65.82	848.98	09/28/91	69.04	845.76	09/09/95	77.39	837.41
06/08/85	57.16	857.64	06/24/88	68.26	846.54	10/20/91	69.04	845.76	10/28/95	75.16	839.64
07/08/85	58.54	856.26	07/22/88	68.65	846.15	11/17/91	67.81	846.99	11/21/95	74.53	840.27
08/17/85	58.78	856.02	08/20/88	68.71	846.09	12/20/91	67.49	847.31			
09/22/85	59.05	855.75	09/15/88	70.09	844.71				06/04/96	74.48	840.32
10/26/85	58.12	856.68	09/17/88	69.89	844.91	04/18/92	66.59	848.21	06/30/96	76.72	838.08
12/07/85	57.61	857.19	10/15/88	67.07	847.73	05/20/92	69.20	845.60	07/28/96	78.24	836.56
			11/05/88	65.82	848.98	06/13/92	70.30	844.50	08/25/96	78.30	836.50
05/10/86	58.43	856.37	12/10/88	64.52	850.28	07/26/92	69.94	844.86	10/05/96	77.22	837.58
06/08/86	61.77	853.03				08/27/92	71.46	843.34	11/02/96	76.20	838.60
07/05/86	62.14	852.66	04/22/89	62.71	852.09	09/24/92	70.46	844.34			

137-049-18BBB MP Elev (msl,ft)=925.1

West Pleasant Aquifer Sl (ft.)=128-132

Date	Depth to Water (ft)	WL Elev (msl. ft)
11/27/79	42.22	882.88
03/25/80	42.07	883.03
04/09/80	41.90	883.20
05/22/80	42.23	882.87
06/20/80	43.40	881.70
06/24/80	43.42	881.68
07/16/80	42.49	882.61
08/13/80	42.54	882.56
09/09/80	42.91	882.19
10/08/80	42.56	882.54
11/18/80	42.59	882.51
02/23/81	42.55	882.55
04/27/81	42.62	882.48
06/09/81	42.78	882.32
07/22/81	42.59	882.51
09/02/81	42.66	882.44
10/08/81	42.74	882.36
12/03/81	42.35	882.75
05/20/82	42.80	882.30
06/30/82	42.99	882.11
08/24/82	43.66	881.44
08/25/82	43.61	881.49
10/30/82	42.20	882.90
11/18/82	43.36	881.74
11/21/82	43.25	881.85
04/18/83	43.36	881.74
06/22/83	43.64	881.46
07/29/83	43.82	881.28
08/18/83	43.85	881.25
09/15/83	43.98	881.12
10/12/83	44.16	880.94
11/08/83	44.33	880.77
12/15/83	44.35	880.75
04/11/84	45.00	880.10
05/16/84	45.35	879.75
06/22/84	45.50	879.60
07/12/84	45.86	879.24
08/09/84	46.38	878.72
09/12/84	46.89	878.21
10/10/84	47.22	877.88
11/07/84	47.00	878.10
12/05/84	47.41	877.69
04/10/85	47.81	877.29
05/05/85	47.20	877.90
06/08/85	47.95	877.15
07/08/85	48.14	876.96
08/17/85	48.69	876.41
09/22/85	48.64	876.46
10/26/85	48.81	876.29
12/07/85	48.79	876.31
06/06/86	49.05	876.05
07/05/86	49.30	875.80
08/02/86	49.29	875.81
08/30/86	49.45	875.65
10/10/86	49.41	875.69
11/01/86	49.65	875.45
12/06/86	49.70	875.40
04/25/87	49.90	875.20
05/30/87	51.73	873.37
06/27/87	50.14	874.96
08/01/87	50.40	874.70
08/29/87	50.61	874.49
09/26/87	50.73	874.37
10/31/87	51.01	874.09
11/28/87	51.14	873.96
12/19/87	51.04	874.06
04/02/88	51.23	873.87
04/30/88	51.40	873.70
05/27/88	51.35	873.75
06/24/88	51.69	873.41
07/22/88	52.05	873.05
08/20/88	52.00	873.10
09/15/88	52.42	872.68
09/17/88	52.29	872.81
10/15/88	52.42	872.68
11/05/88	52.58	872.52
12/10/88	51.35	873.75
04/22/89	52.52	872.58
05/12/89	52.58	872.52
06/03/89	52.78	872.32
06/30/89	52.69	872.41
07/30/89	53.10	872.00
09/10/89	53.27	871.83
09/30/89	53.13	871.97
10/28/89	53.30	871.80
11/19/89	53.32	871.78
05/05/90	53.13	871.97
05/28/90	53.11	871.99
06/30/90	53.01	872.09
08/03/90	53.38	871.72
09/02/90	53.50	871.60
09/29/90	53.60	871.50
10/27/90	53.40	871.70
11/17/90	53.57	871.53
12/08/90	53.69	871.41
03/29/91	53.62	871.48
05/11/91	53.50	871.60
06/01/91	53.55	871.55
08/10/91	53.71	871.39
08/31/91	53.90	871.20
09/28/91	53.94	871.16
10/20/91	54.06	871.04
11/17/91	53.99	871.11
12/20/91	54.14	870.96
04/16/92	54.28	870.82
05/20/92	54.49	870.61
06/13/92	54.69	870.41
07/26/92	54.50	870.60
08/27/92	54.53	870.57
09/24/92	54.46	870.64
10/17/92	54.69	870.41
11/11/92	54.59	870.51
12/06/92	54.64	870.46
05/02/93	54.75	870.35
06/05/93	54.72	870.38
08/05/93	54.52	870.58
08/29/93	54.64	870.46
09/25/93	54.77	870.33
10/18/93	54.89	870.21
11/12/93	54.92	870.18
04/16/94	55.15	869.95
05/15/94	55.22	869.88
06/11/94	55.42	869.68
07/24/94	55.40	869.70
08/20/94	55.54	869.56
09/24/94	55.58	869.52
10/29/94	55.44	869.66
11/26/94	55.55	869.55
04/30/95	55.76	869.34
05/28/95	55.70	869.40
07/01/95	56.00	869.10
08/05/95	56.01	869.09
09/09/95	56.19	868.91
10/28/95	55.94	869.16
11/21/95	56.02	869.08
06/04/96	55.75	869.35
06/30/96	55.88	869.22
07/28/96	56.18	868.92
08/25/96	56.39	868.71
10/05/96	56.27	868.83
11/02/96	56.19	868.91
11/13/96	56.31	868.79

137-049-20DAA MP Elev (msl,ft)=921.2

Horace Aquifer SI (ft.)=250-255

Date	Depth to Water (ft)	WL Elev (msl, ft)
11/27/79	41.72	879.48
03/25/80	41.64	879.56
04/09/80	41.51	879.69
05/22/80	41.64	879.56
06/20/80	41.90	879.30
07/16/80	42.60	878.60
08/13/80	42.70	878.50
09/09/80	42.93	878.27
10/08/80	41.88	879.32
11/18/80	42.70	878.50
02/23/81	42.48	878.72
04/27/81	42.47	878.73
06/09/81	43.01	878.19
06/11/81	43.05	878.15
07/22/81	43.07	878.13
09/02/81	42.85	878.35
09/08/81	43.10	878.10
10/08/81	43.00	878.20
12/03/81	43.05	878.15
05/20/82	43.25	877.95
06/30/82	43.60	877.60
08/24/82	44.26	876.94
08/25/82	44.24	876.96
10/30/82	43.77	877.43
11/18/82	43.81	877.39
11/21/82	44.67	876.53
03/17/83	43.74	877.46
04/18/83	43.82	877.38
05/20/83	43.93	877.27
06/22/83	44.25	876.95
07/29/83	44.49	876.71
08/18/83	46.14	875.06
09/15/83	44.92	876.28
10/12/83	45.15	876.05
11/08/83	45.45	875.75
12/15/83	45.50	875.70
04/11/84	46.17	875.03
05/16/84	46.64	874.56
06/22/84	47.02	874.18
07/12/84	47.50	873.70
08/09/84	48.25	872.95
09/12/84	48.80	872.40
10/10/84	48.87	872.33
11/07/84	48.64	872.56
12/05/84	48.97	872.23
04/10/85	49.29	871.91
05/05/85	49.48	871.72
06/08/85	49.53	871.67
07/08/85	49.95	871.25
08/17/85	50.47	870.73
09/22/85	50.37	870.83
10/26/85	50.45	870.75
12/07/85	50.39	870.81
05/10/86	50.45	870.75
06/08/86	50.94	870.26
07/05/86	51.27	869.93
08/02/86	51.27	869.93
08/30/86	51.45	869.75
10/10/86	51.36	869.84
11/01/86	51.68	869.52
12/01/86	51.55	869.65
12/06/86	51.65	869.55
01/07/87	51.65	869.55
01/14/87	51.61	869.59
01/28/87	51.62	869.58
03/03/87	51.65	869.55
03/24/87	51.52	869.68
04/24/87	51.95	869.25
05/30/87	52.03	869.17
06/27/87	52.50	868.70
08/01/87	52.93	868.27
08/03/87	52.84	868.36
08/29/87	53.14	868.06
09/26/87	53.29	867.91
10/31/87	53.61	867.59
11/28/87	53.70	867.50
12/19/87	53.60	867.60
04/02/88	53.63	867.57
04/30/88	53.80	867.40
05/27/88	53.91	867.29
06/24/88	54.32	866.88
07/22/88	54.90	866.30
08/20/88	55.13	866.07
09/15/88	55.51	865.69
09/17/88	55.49	865.71
10/15/88	54.70	866.50
11/05/88	55.45	865.75
12/10/88	55.29	865.91
04/22/89	55.16	866.04
05/12/89	55.33	865.87
06/03/89	55.46	865.74
06/30/89	55.65	865.55
07/30/89	56.12	865.08
09/10/89	56.42	864.78
09/30/89	56.22	864.98
10/28/89	56.27	864.93
11/19/89	56.30	864.90
05/05/90	55.87	865.33
05/28/90	55.96	865.24
06/29/90	56.00	865.20
08/03/90	56.48	864.72
09/02/90	56.80	864.40
09/29/90	56.95	864.25
10/27/90	56.92	864.28
11/17/90	56.94	864.26
12/08/90	57.00	864.20
03/30/91	56.70	864.50
05/11/91	56.68	864.52
06/01/91	56.76	864.44
07/13/91	56.83	864.37
08/10/91	57.22	863.98
08/31/91	57.41	863.79
09/28/91	57.42	863.78
10/20/91	57.49	863.71
11/17/91	57.41	863.79
12/20/91	57.60	863.60
04/17/92	57.67	863.53
05/20/92	57.88	863.32
06/13/92	58.13	863.07
07/26/92	58.18	863.02
08/27/92	58.29	862.91
09/24/92	58.19	863.01
10/17/92	58.48	862.72
11/11/92	58.32	862.88
12/06/92	58.31	862.89
05/02/93	58.33	862.87
06/05/93	58.46	862.74
08/05/93	58.47	862.73
08/29/93	58.67	862.53
09/25/93	58.81	862.39
10/18/93	58.90	862.30
11/12/93	58.95	862.25
04/16/94	59.11	862.09
05/15/94	59.23	861.97
06/11/94	59.72	861.48
07/24/94	59.58	861.62
08/20/94	59.95	861.25
09/24/94	59.89	861.31
10/29/94	59.70	861.50
11/26/94	59.80	861.40
04/30/95	59.97	861.23
05/28/95	59.97	861.23
07/01/95	60.50	860.70
08/05/95	61.32	859.88
09/09/95	60.75	860.45
10/28/95	60.33	860.87
11/21/95	60.39	860.81
06/04/96	60.06	861.14
06/30/96	60.38	860.82
07/28/96	60.80	860.40
08/25/96	60.95	860.25
10/05/96	60.90	860.30
11/02/96	60.84	860.36

137-049-23BAA MP Elev (msl,ft)=916.6

Horace Aquifer SI (ft.)=198-203

Date	Depth to Water (ft)	WL Elev (msl, ft)
11/17/91	54.46	862.14
12/20/91	54.39	862.21
04/17/92	53.99	862.61
05/20/92	55.02	861.58
06/13/92	55.69	860.91
07/26/92	55.57	861.03
08/27/92	56.21	860.39
09/24/92	55.87	860.73
10/17/92	56.05	860.55
12/06/92	55.60	861.00
05/02/93	55.73	860.87
06/05/93	56.58	860.02
08/05/93	56.54	860.06
08/29/93	56.84	859.76
09/25/93	57.11	859.49
10/18/93	57.09	859.51
11/12/93	56.86	859.74
04/16/94	56.99	859.61
05/15/94	57.22	859.38
06/11/94	59.00	857.60
07/24/94	58.42	858.18
08/20/94	58.96	857.64
09/24/94	58.55	858.05
10/29/94	58.07	858.53
11/26/94	58.06	858.54
04/30/95	58.21	858.39
05/28/95	58.62	857.98
07/01/95	60.40	856.20
08/05/95	60.18	856.42
09/09/95	60.29	856.31
10/28/95	58.95	857.65
11/21/95	58.72	857.88
06/04/96	58.89	857.71
06/30/96	60.24	856.36
07/28/96	61.33	855.27
08/25/96	61.59	855.01
10/05/96	60.50	856.10
11/02/96	59.80	856.80

137-049-23BBB2 MP Elev (msl,ft)=914.69

Undefined Aquifer Sl (ft.)=135-140

Date	Depth to Water (ft)	WL Elev (msl. ft)	Date	Depth to Water (ft)	WL Elev (msl. ft)	Date	Depth to Water (ft)	WL Elev (msl. ft)	Date	Depth to Water (ft)	WL Elev (msl. ft)
11/17/91	52.59	862.10	12/06/92	53.71	860.98	05/15/94	55.35	859.34	08/05/95	58.32	856.37
12/20/91	52.46	862.23				06/11/94	57.03	857.66	09/09/95	58.45	856.24
			05/02/93	53.87	860.82	07/24/94	56.55	858.14	10/28/95	57.07	857.62
04/17/92	52.08	862.61	06/05/93	54.70	859.99	08/20/94	57.00	857.69	11/21/95	56.85	857.84
05/20/92	53.13	861.56	08/05/93	54.65	860.04	09/24/94	56.68	858.01			
06/13/92	53.81	860.88	08/29/93	54.97	859.72	10/29/94	56.21	858.48	06/04/96	56.99	857.70
07/26/92	53.68	861.01	09/25/93	55.24	859.45	11/26/94	56.16	858.53	06/30/96	58.38	856.31
08/27/92	54.35	860.34	10/18/93	55.21	859.48				07/28/96	59.50	855.19
09/24/92	54.00	860.69	11/12/93	55.00	859.69	04/30/95	56.35	858.34	08/25/96	59.72	854.97
10/17/92	54.18	860.51				05/28/95	56.76	857.93	10/05/96	58.63	856.06
11/11/92	53.78	860.91	04/16/94	55.01	859.68	07/01/95	58.62	856.07	11/02/96	57.93	856.76

137-049-23DDD MP Elev (msl,ft)=919.97

Horace Aquifer Sl (ft.)=238-243

Date	Depth to Water (ft)	WL Elev (msl. ft)	Date	Depth to Water (ft)	WL Elev (msl. ft)	Date	Depth to Water (ft)	WL Elev (msl. ft)	Date	Depth to Water (ft)	WL Elev (msl. ft)
12/20/91	55.27	864.70				06/11/94	59.56	860.41	09/09/95	61.00	858.97
			05/02/93	56.74	863.23	07/24/94	59.20	860.77	10/28/95	59.75	860.22
04/17/92	55.13	864.84	06/05/93	57.45	862.52	08/20/94	59.60	860.37	11/21/95	59.59	860.38
05/20/92	56.01	863.96	08/05/93	57.51	862.46	09/24/94	59.34	860.63			
06/13/92	56.63	863.34	08/29/93	57.74	862.23	10/29/94	58.90	861.07	06/04/96	59.72	860.25
07/26/92	56.53	863.44	09/25/93	57.98	861.99	11/26/94	58.20	861.77	06/30/96	60.94	859.03
08/27/92	57.10	862.87	10/18/93	57.98	861.99				07/28/96	61.95	858.02
09/24/92	56.79	863.18	11/12/93	57.79	862.18	04/30/95	59.09	860.88	08/25/96	62.21	857.76
10/17/92	56.99	862.98				05/28/95	59.42	860.55	10/05/96	61.26	858.71
11/11/92	56.75	863.22	04/16/94	57.82	862.15	07/01/95	61.08	858.89	11/02/96	60.63	859.34
12/06/92	56.61	863.36	05/15/94	58.10	861.87	08/05/95	60.87	859.10	11/13/96	60.72	859.25

137-049-25CCC MP Elev (msl,ft)=918.5

Horace Aquifer SI (ft.)=228-238

Date	Depth to Water (ft)	WL Elev (msl, ft)
09/03/64	27.46	891.04
10/01/64	22.75	895.75
11/02/64	23.89	894.61
12/09/64	23.92	894.58
01/18/65	23.90	894.60
02/12/65	23.83	894.67
03/15/65	23.85	894.65
04/13/65	23.38	895.12
05/10/65	24.09	894.41
06/11/65	23.51	894.99
09/14/65	24.18	894.32
10/21/65	24.28	894.22
11/16/65	24.29	894.21
12/14/65	24.18	894.32
01/11/66	24.34	894.16
02/08/66	24.30	894.20
03/14/66	24.18	894.32
03/21/66	24.54	893.96
04/14/66	24.45	894.05
05/10/66	24.34	894.16
06/14/66	24.39	894.11
07/12/66	24.48	894.02
07/21/66	24.57	893.93
08/13/66	24.35	894.15
09/28/66	24.50	894.00
10/25/66	24.57	893.93
12/02/66	24.65	893.85
12/29/66	24.54	893.96
01/25/67	24.61	893.89
03/03/67	24.61	893.89
03/21/67	24.54	893.96
04/28/67	24.27	894.23
05/25/67	24.52	893.98
06/22/67	24.46	894.04
07/11/67	24.63	893.87
08/17/67	24.91	893.59
10/11/67	25.00	893.50
11/07/67	25.05	893.45
12/06/67	25.10	893.40
01/23/68	25.14	893.36
02/27/68	25.20	893.30
04/02/68	25.17	893.33
04/30/68	25.10	893.40
05/27/68	25.15	893.35
06/25/68	25.26	893.24
07/23/68	24.86	893.64
08/20/68	24.94	893.56
09/17/68	25.50	893.00
10/15/68	25.44	893.06
11/13/68	25.45	893.05
12/10/68	25.52	892.98
01/09/69	25.40	893.10
02/13/69	25.38	893.12
03/05/69	25.34	893.16
05/01/69	25.36	893.14
06/02/69	25.47	893.03
06/24/69	25.48	893.02
07/15/69	25.43	893.07
08/21/69	25.73	892.77
09/15/69	25.74	892.76
10/15/69	25.80	892.70
11/14/69	25.80	892.70
12/04/69	25.90	892.60
01/05/70	25.88	892.62
02/06/70	25.84	892.66
03/06/70	25.78	892.72
05/23/70	25.81	892.69
06/23/70	25.79	892.71
07/22/70	26.20	892.30
08/19/70	26.27	892.23
09/15/70	26.45	892.05
10/16/70	26.46	892.04
11/13/70	26.44	892.06
12/01/70	26.26	892.24

Date	Depth to Water (ft)	WL Elev (msl, ft)
01/13/71	26.47	892.03
02/11/71	26.31	892.19
03/09/71	26.37	892.13
04/03/71	26.46	892.04
04/29/71	26.47	892.03
06/07/71	26.65	891.85
07/09/71	26.60	891.90
07/20/71	26.59	891.91
08/05/71	26.90	891.60
08/30/71	26.76	891.74
08/31/71	26.84	891.66
10/05/71	26.71	891.79
11/02/71	26.85	891.65
12/01/71	26.52	891.98
01/05/72	26.26	892.24
02/10/72	26.33	892.17
03/08/72	26.29	892.21
04/13/72	26.18	892.32
05/02/72	26.33	892.17
06/06/72	26.30	892.20
07/10/72	26.34	892.16
08/09/72	26.29	892.21
09/06/72	26.14	892.36
10/04/72	26.40	892.10
11/02/72	26.25	892.25
12/06/72	26.83	891.67
03/01/73	26.31	892.19
04/03/73	26.36	892.14
05/02/73	26.42	892.08
06/11/73	26.56	891.94
06/26/73	26.04	892.46
07/10/73	26.81	891.69
08/07/73	26.86	891.64
08/28/73	26.99	891.51
10/03/73	26.84	891.66
11/06/73	26.87	891.63
12/05/73	26.74	891.76
12/18/73	26.44	892.06
01/10/74	26.78	891.72
02/12/74	26.65	891.85
03/14/74	26.62	891.88
04/03/74	26.65	891.85
06/04/74	26.60	891.90
09/10/74	27.07	891.43
12/03/74	27.20	891.30
03/19/75	27.02	891.48
06/18/75	27.17	891.33
09/16/75	27.08	891.42
12/04/75	26.95	891.55
03/11/76	26.85	891.65
06/01/76	27.08	891.42
09/10/76	28.32	890.18
11/30/76	28.60	889.90
03/09/77	29.79	888.71
06/13/77	31.69	886.81
09/19/77	32.95	885.55
12/07/77	33.15	885.35
03/14/78	33.83	884.67
06/19/78	34.89	883.61
09/20/78	36.10	882.40
11/20/78	35.84	882.66
03/20/79	35.49	883.01
06/18/79	36.13	882.37
09/17/79	36.65	881.85
11/27/79	36.54	881.96
03/25/80	36.76	881.74
05/22/80	37.79	880.71
06/20/80	38.10	880.40
07/16/80	38.51	879.99
08/13/80	38.68	879.82
09/09/80	38.50	880.00
10/08/80	38.18	880.32

Date	Depth to Water (ft)	WL Elev (msl, ft)
11/18/80	38.11	880.39
02/23/81	37.93	880.57
04/27/81	38.28	880.22
06/09/81	39.02	879.48
07/22/81	39.08	879.42
09/02/81	39.26	879.24
09/08/81	39.27	879.23
10/08/81	39.23	879.27
12/03/81	39.03	879.47
05/20/82	39.52	878.98
06/30/82	40.12	878.38
08/24/82	40.85	877.65
08/25/82	40.82	877.68
10/30/82	40.28	878.22
11/18/82	40.27	878.23
11/21/82	40.12	878.38
03/17/83	40.34	878.16
04/18/83	40.52	877.98
05/20/83	40.73	877.77
06/22/83	41.49	877.01
07/29/83	41.74	876.76
08/18/83	42.00	876.50
09/15/83	42.20	876.30
10/12/83	42.02	876.48
11/09/83	41.94	876.56
12/15/83	41.85	876.65
04/11/84	42.35	876.15
05/16/84	42.83	875.67
06/22/84	43.46	875.04
07/12/84	43.94	874.56
08/09/84	44.74	873.76
09/12/84	45.12	873.38
10/10/84	44.94	873.56
11/07/84	44.66	873.84
12/05/84	46.55	871.95
04/10/85	44.62	873.88
05/05/85	44.88	873.62
06/08/85	45.35	873.15
07/08/85	45.85	872.65
08/17/85	46.37	872.13
09/22/85	46.16	872.34
10/26/85	46.16	872.34
12/07/85	45.98	872.52
05/10/86	46.35	872.15
06/08/86	47.23	871.27
07/05/86	47.77	870.73
08/02/86	47.67	870.83
08/30/86	47.66	870.84
10/10/86	47.37	871.13
11/01/86	47.74	870.76
12/01/86	47.46	871.04
12/06/86	47.57	870.93
01/07/87	47.50	871.00
01/14/87	47.41	871.09
01/28/87	47.44	871.06
03/03/87	47.62	870.88
03/24/87	47.53	870.97
04/25/87	47.97	870.53
05/30/87	48.97	869.53
06/27/87	49.80	868.70
08/01/87	49.98	868.52
08/03/87	50.04	868.46
08/29/87	50.03	868.47
08/31/87	50.03	868.47
09/26/87	49.85	868.65
10/31/87	49.83	868.67
11/28/87	49.55	868.95
12/20/87	49.15	869.35
04/02/88	48.97	869.53
04/30/88	49.51	868.99
05/27/88	50.40	868.10
06/24/88	51.71	866.79
07/22/88	52.10	866.40

Date	Depth to Water (ft)	WL Elev (msl, ft)
08/20/88	52.40	866.10
09/15/88	52.78	865.72
09/17/88	52.65	865.85
10/15/88	52.09	866.41
11/05/88	51.68	866.82
12/10/88	51.30	867.20
04/22/89	50.68	867.82
05/12/89	51.04	867.46
06/03/89	51.72	866.78
06/30/89	52.60	865.90
07/30/89	53.90	864.60
09/10/89	53.72	864.78
09/30/89	52.79	865.71
10/28/89	52.80	865.70
11/19/89	52.50	866.00
05/05/90	52.48	866.02
05/28/90	52.83	865.67
06/29/90	53.24	865.26
08/03/90	54.13	864.37
09/02/90	54.80	863.70
09/29/90	54.43	864.07
10/27/90	53.78	864.72
11/17/90	53.47	865.03
12/08/90	53.29	865.21
03/30/91	52.90	865.60
05/11/91	53.22	865.28
06/01/91	53.67	864.83
07/14/91	53.95	864.55
08/10/91	54.57	863.93
08/31/91	55.04	863.46
09/28/91	54.62	863.88
10/20/91	54.56	863.94
11/17/91	54.19	864.31
12/21/91	54.08	864.42
04/17/92	53.85	864.65
05/20/92	54.63	863.87
06/13/92	55.16	863.34
07/26/92	55.16	863.34
08/27/92	55.67	862.83
09/24/92	55.40	863.10
10/17/92	55.62	862.88
11/11/92	55.40	863.10
12/06/92	55.29	863.21
05/02/93	55.44	863.06
06/05/93	56.06	862.44
08/05/93	56.14	862.36
08/29/93	56.33	862.17
09/25/93	56.50	862.00
10/18/93	56.54	861.96
11/12/93	56.38	862.12
04/16/94	56.47	862.03
05/15/94	56.71	861.79
06/11/94	57.95	860.55
07/24/94	57.73	860.77
08/20/94	58.07	860.43
09/24/94	57.88	860.62
10/29/94	58.50	860.00
11/26/94	58.47	860.03
04/30/95	58.69	859.81
05/28/95	58.97	859.53
07/01/95	60.45	858.05
08/05/95	60.20	858.30
09/09/95	60.44	858.06
10/28/95	59.32	859.18
11/21/95	59.22	859.28
06/04/96	59.26	859.24
06/30/96	60.34	858.16
07/28/96	61.25	857.25
08/25/96	61.44	857.06
10/05/96	60.62	857.88
11/02/96	60.70	857.80

137-049-27BBC MP Elev (msl,ft)=919.1

Horace Aquifer SI (ft.)=249-300

Date	Depth to Water (ft)	WL Elev (msl. ft)	Date	Depth to Water (ft)	WL Elev (msl. ft)	Date	Depth to Water (ft)	WL Elev (msl. ft)	Date	Depth to Water (ft)	WL Elev (msl. ft)
10/23/79	39.24	879.86	12/01/79	39.08	880.02	05/15/80	39.34	879.76	06/24/80	39.56	879.54
10/23/79	39.25	879.85	12/01/79	39.11	879.99	05/16/80	39.48	879.62	06/24/80	39.62	879.48
10/23/79	39.25	879.85	12/02/79	39.01	880.09	05/16/80	39.34	879.76	06/25/80	39.85	879.25
10/24/79	39.24	879.86	12/02/79	39.11	879.99	05/17/80	39.34	879.76	06/25/80	39.61	879.49
10/24/79	39.28	879.82	12/03/79	39.06	880.04	05/17/80	39.29	879.81	06/26/80	39.63	879.47
10/25/79	39.27	879.83	12/03/79	39.01	880.09	05/18/80	39.29	879.81	06/26/80	39.79	879.31
10/25/79	39.29	879.81	12/04/79	39.06	880.04	05/18/80	39.29	879.81	06/27/80	39.56	879.54
10/26/79	39.20	879.90	12/04/79	38.88	880.22	05/19/80	39.39	879.71	06/27/80	39.63	879.47
10/26/79	39.27	879.83	12/05/79	38.93	880.17	05/19/80	39.29	879.81	06/28/80	39.57	879.53
10/27/79	39.23	879.87	12/05/79	38.88	880.22	05/20/80	39.38	879.72	06/28/80	39.56	879.54
10/27/79	39.20	879.90	12/06/79	38.93	880.17	05/20/80	39.35	879.75	06/29/80	39.65	879.45
10/28/79	39.22	879.88	12/06/79	38.82	880.28	05/21/80	39.59	879.51	06/29/80	39.57	879.53
10/28/79	39.24	879.86	12/07/79	38.88	880.22	05/21/80	39.36	879.74	06/30/80	39.60	879.50
10/29/79	39.23	879.87	12/07/79	39.05	880.05	05/22/80	39.42	879.68	06/30/80	39.76	879.34
10/29/79	39.29	879.81	12/08/79	38.99	880.11	05/22/80	39.51	879.59	07/01/80	39.67	879.43
10/30/79	39.16	879.94	12/08/79	39.06	880.04	05/23/80	39.38	879.72	07/01/80	39.69	879.41
10/30/79	39.27	879.83	12/09/79	38.96	880.14	05/23/80	39.53	879.57	07/02/80	39.72	879.38
10/31/79	38.95	880.15	12/09/79	39.00	880.10	05/24/80	39.41	879.69	07/02/80	39.68	879.42
10/31/79	39.14	879.96	12/10/79	38.95	880.15	05/24/80	39.59	879.51	07/03/80	39.72	879.38
11/01/79	38.95	880.15	12/10/79	38.88	880.22	05/25/80	39.38	879.72	07/03/80	39.92	879.18
11/01/79	39.02	880.08	12/11/79	38.95	880.15	05/25/80	39.54	879.56	07/04/80	39.86	879.24
11/02/79	39.02	880.08	12/11/79	39.04	880.06	05/26/80	39.44	879.66	07/04/80	39.73	879.37
11/02/79	39.07	880.03	12/12/79	38.99	880.11	05/26/80	39.60	879.50	07/05/80	39.75	879.35
11/03/79	39.07	880.03	12/12/79	39.04	880.06	05/27/80	39.50	879.60	07/05/80	39.73	879.37
11/03/79	39.08	880.02	12/13/79	38.99	880.11	05/27/80	39.44	879.66	07/06/80	39.71	879.39
11/04/79	39.07	880.03	12/13/79	39.08	880.02	05/28/80	39.49	879.61	07/06/80	39.74	879.36
11/04/79	39.11	879.99	12/14/79	38.97	880.13	05/28/80	39.44	879.66	07/07/80	39.70	879.40
11/05/79	39.12	879.98	12/14/79	39.07	880.03	05/29/80	39.45	879.65	07/07/80	39.78	879.32
11/05/79	39.16	879.94	12/15/79	38.95	880.15	05/29/80	39.42	879.68	07/08/80	39.79	879.31
11/06/79	39.13	879.97	12/15/79	39.10	880.00	05/30/80	39.41	879.69	07/08/80	40.01	879.09
11/06/79	39.16	879.94	12/16/79	39.12	879.98	05/30/80	39.45	879.65	07/09/80	39.82	879.28
11/07/79	39.07	880.03	12/16/79	39.10	880.00	05/31/80	39.43	879.67	07/09/80	39.90	879.20
11/07/79	39.13	879.97	12/17/79	39.02	880.08	05/31/80	39.46	879.64	07/10/80	39.80	879.30
11/08/79	39.10	880.00	12/17/79	39.11	879.99	06/01/80	39.40	879.70	07/10/80	39.81	879.29
11/08/79	39.03	880.07	12/18/79	38.95	880.15	06/01/80	39.43	879.67	07/11/80	39.75	879.35
11/09/79	39.05	880.05	12/18/79	39.01	880.09	06/02/80	39.41	879.69	07/11/80	39.79	879.31
11/09/79	39.03	880.07	12/19/79	38.99	880.11	06/02/80	39.52	879.58	07/12/80	39.76	879.34
11/10/79	39.06	880.04	12/19/79	39.00	880.10	06/03/80	39.52	879.58	07/12/80	39.79	879.31
11/10/79	39.05	880.05	12/20/79	38.96	880.14	06/03/80	39.59	879.51	07/13/80	39.76	879.34
11/11/79	39.09	880.01	12/20/79	38.99	880.11	06/04/80	39.53	879.57	07/13/80	39.93	879.17
11/11/79	39.06	880.04	12/21/79	38.96	880.14	06/04/80	39.62	879.48	07/14/80	39.81	879.29
11/12/79	39.08	880.02	12/21/79	38.95	880.15	06/05/80	39.41	879.69	07/14/80	39.96	879.14
11/12/79	39.10	880.00	12/22/79	38.96	880.14	06/05/80	39.53	879.57	07/15/80	39.82	879.28
11/13/79	39.11	879.99	12/22/79	38.95	880.15	06/06/80	39.45	879.65	07/15/80	39.85	879.25
11/13/79	39.07	880.03	12/23/79	38.96	880.14	06/06/80	39.41	879.69	07/16/80	39.83	879.27
11/14/79	39.11	879.99	12/23/79	39.00	880.10	06/07/80	39.48	879.62	07/16/80	39.82	879.28
11/14/79	39.04	880.06	12/24/79	39.00	880.10	06/07/80	39.42	879.68	07/16/80	39.86	879.24
11/15/79	39.03	880.07	12/24/79	39.01	880.09	06/08/80	39.48	879.62	07/17/80	39.83	879.27
11/15/79	39.09	880.01	12/25/79	39.01	880.09	06/08/80	39.45	879.65	07/17/80	39.76	879.34
11/16/79	39.04	880.06	12/25/79	38.98	880.12	06/09/80	39.44	879.66	07/18/80	39.75	879.35
11/16/79	39.09	880.01	12/26/79	38.98	880.12	06/09/80	39.41	879.69	07/18/80	39.77	879.33
11/17/79	39.07	880.03	12/26/79	39.02	880.08	06/10/80	39.49	879.61	07/19/80	39.75	879.35
11/17/79	39.05	880.05	12/27/79	39.02	880.08	06/10/80	39.42	879.68	07/19/80	39.78	879.32
11/18/79	38.95	880.15	12/27/79	39.08	880.02	06/11/80	39.46	879.64	07/20/80	39.79	879.31
11/18/79	39.05	880.05	12/28/79	39.08	880.02	06/11/80	39.49	879.61	07/20/80	39.75	879.35
11/19/79	39.03	880.07	12/28/79	39.09	880.01	06/12/80	39.42	879.68	07/21/80	39.84	879.26
11/19/79	39.15	879.95	12/29/79	39.05	880.05	06/12/80	39.46	879.64	07/21/80	39.79	879.31
11/20/79	39.16	879.94	12/29/79	39.09	880.01	06/13/80	39.46	879.64	07/22/80	39.84	879.26
11/20/79	39.22	879.88	12/30/79	39.02	880.08	06/13/80	39.42	879.68	07/22/80	39.87	879.23
11/21/79	39.22	879.88	12/30/79	39.05	880.05	06/14/80	39.46	879.64	07/23/80	39.94	879.16
11/21/79	39.19	879.91	12/31/79	39.02	880.08	06/14/80	39.43	879.67	07/23/80	39.88	879.22
11/22/79	39.12	879.98	12/31/79	39.01	880.09	06/15/80	39.49	879.61	07/24/80	39.94	879.16
11/22/79	39.19	879.91				06/15/80	39.45	879.65	07/24/80	39.90	879.20
11/23/79	39.12	879.98	01/01/80	39.01	880.09	06/16/80	39.47	879.63	07/25/80	39.96	879.14
11/23/79	39.07	880.03	01/01/80	38.98	880.12	06/16/80	39.49	879.61	07/25/80	39.94	879.16
11/24/79	39.06	880.04	01/02/80	39.01	880.09	06/17/80	39.46	879.64	07/26/80	39.92	879.18
11/24/79	39.07	880.03	01/02/80	39.06	880.04	06/17/80	39.47	879.63	07/26/80	39.96	879.14
11/25/79	39.02	880.08	01/03/80	39.01	880.09	06/18/80	39.46	879.64	07/27/80	39.92	879.18
11/25/79	39.06	880.04	04/09/80	38.90	880.20	06/18/80	39.47	879.63	07/27/80	39.87	879.23
11/26/79	39.02	880.08	04/09/80	38.90	880.20	06/19/80	39.47	879.63	07/28/80	39.89	879.21
11/26/79	39.00	880.10	04/09/80	38.93	880.17	06/19/80	39.50	879.60	07/28/80	39.87	879.23
11/27/79	39.07	880.03	04/10/80	38.91	880.19	06/20/80	39.51	879.59	07/29/80	39.93	879.17
11/27/79	39.04	880.06	04/10/80	38.96	880.14	06/20/80	39.55	879.55	07/29/80	39.89	879.21
11/27/79	39.01	880.09	04/11/80	38.99	880.11	06/20/80	39.55	879.55	07/30/80	39.93	879.17
11/28/79	39.10	880.00	04/11/80	38.96	880.14	06/21/80	39.53	879.57	07/30/80	39.89	879.21
11/28/79	39.06	880.04	04/12/80	38.98	880.12	06/21/80	39.54	879.56	07/31/80	39.90	879.20
11/29/79	39.10	880.00	05/14/80	39.40	879.70	06/22/80	39.53	879.57	07/31/80	39.91	879.19
11/29/79	39.07	880.03	05/14/80	39.37	879.73	06/22/80	39.53	879.57	08/01/80	39.91	879.19
11/30/79	39.08	880.02	05/14/80	39.33	879.77	06/23/80	39.53	879.57	08/01/80	40.09	879.01
11/30/79	39.04	880.06	05/15/80	39.54	879.56	06/23/80	39.57	879.53	08/02/80	39.92	879.18

137-049-27BBC **(Continued)** MP Elev (msl,ft)=919.1

Horace Aquifer SI (ft.)=249-300

Date	Depth to Water (ft)	WL Elev (msl, ft)	Date	Depth to Water (ft)	WL Elev (msl, ft)	Date	Depth to Water (ft)	WL Elev (msl, ft)	Date	Depth to Water (ft)	WL Elev (msl, ft)
08/02/80	39.91	879.19	10/10/80	39.93	879.17	02/26/81	39.93	879.17	04/07/81	39.81	879.29
08/03/80	39.91	879.19	11/18/80	40.03	879.07	02/27/81	39.83	879.27	04/07/81	39.82	879.28
08/03/80	39.83	879.27	12/05/80	39.92	879.18	02/27/81	39.89	879.21	04/08/81	39.85	879.25
08/04/80	39.86	879.24				02/28/81	39.85	879.25	04/08/81	39.82	879.28
08/04/80	39.82	879.28	01/08/81	39.99	879.11	02/28/81	39.87	879.23	04/09/81	39.85	879.25
08/05/80	39.85	879.25	01/20/81	39.93	879.17	03/01/81	39.83	879.27	04/09/81	39.81	879.29
08/05/80	39.92	879.18	01/21/81	39.93	879.17	03/01/81	39.89	879.21	04/10/81	39.81	879.29
08/06/80	39.94	879.16	01/21/81	39.94	879.16	03/02/81	39.90	879.20	04/10/81	39.87	879.23
08/06/80	39.88	879.22	01/22/81	39.91	879.19	03/02/81	39.86	879.24	04/11/81	39.91	879.19
08/07/80	39.89	879.21	01/22/81	39.94	879.16	03/03/81	39.79	879.31	04/11/81	39.88	879.22
08/07/80	39.98	879.12	01/23/81	39.86	879.24	03/03/81	39.85	879.25	04/12/81	39.91	879.19
08/08/80	39.95	879.15	01/23/81	39.91	879.19	03/04/81	39.82	879.28	04/12/81	39.86	879.24
08/08/80	39.97	879.13	01/24/81	39.86	879.24	03/04/81	39.86	879.24	04/13/81	39.85	879.25
08/09/80	39.90	879.20	01/24/81	39.79	879.31	03/05/81	39.88	879.22	04/13/81	39.98	879.12
08/09/80	39.96	879.14	01/25/81	39.79	879.31	03/05/81	39.85	879.25	04/14/81	39.98	879.12
08/10/80	39.92	879.18	01/25/81	39.78	879.32	03/06/81	39.89	879.21	04/14/81	40.05	879.05
08/10/80	39.90	879.20	01/26/81	39.79	879.31	03/06/81	39.94	879.16	04/15/81	39.99	879.11
08/11/80	39.95	879.15	01/26/81	39.87	879.23	03/07/81	39.95	879.15	04/15/81	40.05	879.05
08/11/80	39.92	879.18	01/27/81	39.87	879.23	03/07/81	39.94	879.16	04/16/81	39.93	879.17
08/12/80	39.92	879.18	01/27/81	39.88	879.22	03/08/81	39.95	879.15	04/16/81	40.00	879.10
08/12/80	39.94	879.16	01/28/81	39.96	879.14	03/08/81	39.94	879.16	04/17/81	40.02	879.08
08/13/80	39.90	879.20	01/28/81	39.88	879.22	03/09/81	39.96	879.14	04/17/81	39.95	879.15
08/13/80	39.98	879.12	01/29/81	39.96	879.14	03/09/81	39.94	879.16	04/18/81	40.03	879.07
08/13/80	39.97	879.13	01/29/81	40.01	879.09	03/10/81	39.93	879.17	04/18/81	39.98	879.12
08/14/80	39.98	879.12	01/30/81	39.94	879.16	03/10/81	39.95	879.15	04/19/81	40.01	879.09
08/14/80	40.01	879.09	01/30/81	40.01	879.09	03/11/81	39.95	879.15	04/19/81	40.05	879.05
08/15/80	40.02	879.08	01/31/81	39.93	879.17	03/11/81	39.88	879.22	04/20/81	39.99	879.11
08/15/80	40.02	879.08	01/31/81	39.85	879.25	03/12/81	39.88	879.22	04/20/81	40.06	879.04
08/16/80	39.97	879.13	02/01/81	39.94	879.16	03/12/81	39.89	879.21	04/21/81	39.88	879.22
08/16/80	40.02	879.08	02/01/81	39.84	879.26	03/13/81	39.92	879.18	04/21/81	39.98	879.12
08/17/80	39.96	879.14	02/02/81	39.96	879.14	03/13/81	39.89	879.21	04/22/81	40.13	878.97
08/17/80	39.97	879.13	02/02/81	39.94	879.16	03/14/81	39.91	879.19	04/22/81	39.88	879.22
08/18/80	39.94	879.16	02/03/81	39.97	879.13	03/14/81	39.80	879.30	04/23/81	39.99	879.11
08/18/80	39.97	879.13	02/03/81	39.94	879.16	03/15/81	39.91	879.19	04/23/81	39.96	879.14
08/19/80	39.95	879.15	02/04/81	39.93	879.17	03/15/81	39.82	879.28	04/24/81	39.97	879.13
08/19/80	39.96	879.14	02/04/81	39.99	879.11	03/16/81	39.84	879.26	04/24/81	40.00	879.10
08/20/80	39.88	879.22	02/05/81	39.93	879.17	03/16/81	39.91	879.19	04/25/81	39.95	879.15
08/20/80	39.96	879.14	02/05/81	39.88	879.22	03/17/81	39.92	879.18	04/25/81	39.96	879.14
08/21/80	39.96	879.14	02/06/81	39.90	879.20	03/17/81	39.86	879.24	04/26/81	39.95	879.15
08/21/80	39.86	879.24	02/06/81	39.83	879.27	03/18/81	39.90	879.20	04/26/81	40.09	879.01
08/22/80	39.99	879.11	02/07/81	39.80	879.30	03/18/81	39.92	879.18	04/27/81	40.00	879.10
08/22/80	39.97	879.13	02/07/81	39.84	879.26	03/18/81	39.89	879.21	04/27/81	39.98	879.12
08/23/80	39.96	879.14	02/08/81	39.84	879.26	03/19/81	39.90	879.20	04/27/81	39.96	879.14
08/23/80	39.98	879.12	02/08/81	39.85	879.25	03/19/81	39.91	879.19	04/28/81	39.95	879.15
08/24/80	39.96	879.14	02/09/81	39.85	879.25	03/20/81	39.91	879.19	04/28/81	39.99	879.11
08/24/80	39.94	879.16	02/09/81	39.84	879.26	03/20/81	39.86	879.24	04/29/81	39.93	879.17
08/25/80	39.95	879.15	02/10/81	39.86	879.24	03/21/81	39.95	879.15	04/29/81	39.96	879.14
08/25/80	40.01	879.09	02/10/81	39.85	879.25	03/21/81	39.89	879.21	04/30/81	40.01	879.09
08/26/80	40.02	879.08	02/11/81	39.88	879.22	03/22/81	39.95	879.15	04/30/81	39.96	879.14
08/26/80	40.04	879.06	02/11/81	39.86	879.24	03/22/81	39.97	879.13	05/01/81	40.04	879.06
08/27/80	40.02	879.08	02/12/81	39.88	879.22	03/23/81	39.96	879.14	05/01/81	40.00	879.10
08/27/80	40.04	879.06	02/12/81	39.96	879.14	03/23/81	39.94	879.16	05/02/81	39.91	879.19
08/28/80	40.01	879.09	02/13/81	39.94	879.16	03/24/81	39.95	879.15	05/02/81	40.00	879.10
08/28/80	40.03	879.07	02/13/81	39.96	879.14	03/24/81	39.93	879.17	05/03/81	39.99	879.11
08/29/80	40.01	879.09	02/14/81	39.87	879.23	03/25/81	39.93	879.17	05/03/81	39.92	879.18
08/29/80	39.94	879.16	02/14/81	39.96	879.14	03/25/81	39.90	879.20	05/04/81	40.00	879.10
08/30/80	39.98	879.12	02/15/81	39.86	879.24	03/26/81	39.91	879.19	05/04/81	40.05	879.05
08/30/80	39.96	879.14	02/15/81	39.83	879.27	03/26/81	39.95	879.15	05/05/81	40.13	878.97
08/31/80	39.98	879.12	02/16/81	39.81	879.29	03/27/81	39.96	879.14	05/05/81	40.06	879.04
08/31/80	39.96	879.14	02/16/81	39.84	879.26	03/27/81	39.88	879.22	05/06/81	40.24	878.86
09/01/80	39.97	879.13	02/17/81	39.80	879.30	03/28/81	39.86	879.24	05/06/81	40.13	878.97
09/01/80	39.96	879.14	02/17/81	39.82	879.28	03/28/81	39.87	879.23	05/07/81	40.25	878.85
09/02/80	39.97	879.13	02/18/81	39.82	879.28	03/29/81	39.75	879.35	05/07/81	40.18	878.92
09/02/80	39.99	879.11	02/18/81	39.81	879.29	03/29/81	39.86	879.24	05/08/81	40.14	878.96
09/03/80	39.96	879.14	02/19/81	39.81	879.29	03/30/81	39.76	879.34	05/08/81	40.23	878.87
09/03/80	39.93	879.17	02/19/81	39.85	879.25	03/30/81	39.80	879.30	05/09/81	40.15	878.95
09/04/80	39.96	879.14	02/20/81	39.81	879.29	03/31/81	39.71	879.39	05/09/81	40.20	878.90
09/04/80	40.01	879.09	02/20/81	39.85	879.25	03/31/81	39.80	879.30	05/10/81	40.19	878.91
09/05/80	40.01	879.09	02/21/81	39.85	879.25	04/01/81	39.80	879.30	05/10/81	40.15	878.95
09/05/80	40.04	879.06	02/21/81	39.84	879.26	04/01/81	39.73	879.37	05/11/81	40.15	878.95
09/06/80	40.04	879.06	02/22/81	39.83	879.27	04/02/81	39.79	879.31	05/11/81	40.18	878.92
09/06/80	40.01	879.09	02/22/81	39.85	879.25	04/02/81	39.75	879.35	05/12/81	40.18	878.92
09/07/80	40.02	879.08	02/23/81	39.82	879.28	04/03/81	39.76	879.34	05/12/81	40.17	878.93
09/07/80	40.00	879.10	02/23/81	39.82	879.28	04/03/81	39.73	879.37	05/13/81	40.15	878.95
09/08/80	39.99	879.11	02/23/81	39.83	879.27	04/04/81	39.84	879.26	05/13/81	40.17	878.93
09/08/80	40.08	879.02	02/24/81	39.88	879.22	04/04/81	39.74	879.36	05/14/81	40.15	878.95
09/09/80	40.07	879.03	02/24/81	39.82	879.28	04/05/81	39.84	879.26	05/14/81	40.39	878.71
09/09/80	40.08	879.02	02/25/81	39.89	879.21	04/05/81	39.88	879.22	05/15/81	40.16	878.94
09/09/80	40.11	878.99	02/25/81	39.93	879.17	04/06/81	39.87	879.23	05/15/81	40.22	878.88
10/08/80	39.95	879.15	02/26/81	39.90	879.20	04/06/81	39.80	879.30	05/16/81	40.17	878.93

137-049-27BBC **(Continued)** MP Elev (msl,ft)=919.1

Horace Aquifer SI (ft.)=249-300

Date	Depth to Water (ft)	WL Elev (msl. ft)	Date	Depth to Water (ft)	WL Elev (msl. ft)	Date	Depth to Water (ft)	WL Elev (msl. ft)	Date	Depth to Water (ft)	WL Elev (msl. ft)
05/16/81	40.19	878.91	06/25/81	40.27	878.83	08/03/81	40.20	878.90	09/12/81	40.36	878.74
05/17/81	40.23	878.87	06/25/81	40.33	878.77	08/04/81	40.27	878.83	09/12/81	40.38	878.72
05/17/81	40.19	878.91	06/26/81	40.30	878.80	08/04/81	40.24	878.86	09/13/81	40.40	878.70
05/18/81	40.28	878.82	06/26/81	40.34	878.76	08/05/81	40.17	878.93	09/13/81	40.35	878.75
05/18/81	40.23	878.87	06/27/81	40.24	878.86	08/05/81	40.27	878.83	09/14/81	40.44	878.66
05/19/81	40.29	878.81	06/27/81	40.29	878.81	08/06/81	40.18	878.92	09/14/81	40.40	878.70
05/19/81	40.26	878.84	06/28/81	40.22	878.88	08/06/81	40.19	878.91	09/15/81	40.44	878.66
05/20/81	40.27	878.83	06/28/81	40.27	878.83	08/07/81	40.19	878.91	09/15/81	40.62	878.48
05/20/81	40.23	878.87	06/29/81	40.27	878.83	08/07/81	40.18	878.92	09/16/81	40.53	878.57
05/21/81	40.20	878.90	06/29/81	40.35	878.75	08/08/81	40.18	878.92	09/16/81	40.69	878.41
05/21/81	40.23	878.87	06/30/81	40.35	878.75	08/08/81	40.21	878.89	09/17/81	40.52	878.58
05/22/81	40.13	878.97	06/30/81	40.37	878.73	08/09/81	40.21	878.89	09/17/81	40.56	878.54
05/22/81	40.20	878.90	07/01/81	40.37	878.73	08/09/81	40.24	878.86	09/18/81	40.45	878.65
05/23/81	40.06	879.04	07/01/81	40.38	878.72	08/10/81	40.26	878.84	09/18/81	40.52	878.58
05/23/81	40.24	878.86	07/02/81	40.39	878.71	08/10/81	40.24	878.86	09/19/81	40.43	878.67
05/24/81	40.04	879.06	07/02/81	40.31	878.79	08/11/81	40.22	878.88	09/19/81	40.45	878.65
05/24/81	40.07	879.03	07/03/81	40.26	878.84	08/11/81	40.25	878.85	09/20/81	40.43	878.67
05/25/81	40.06	879.04	07/03/81	40.22	878.88	08/12/81	40.24	878.86	09/20/81	40.41	878.69
05/25/81	40.10	879.00	07/04/81	40.23	878.87	08/12/81	40.22	878.88	09/21/81	40.42	878.68
05/26/81	40.15	878.95	07/04/81	40.24	878.86	08/13/81	40.24	878.86	09/21/81	40.46	878.64
05/26/81	40.10	879.00	07/05/81	40.24	878.86	08/13/81	40.23	878.87	09/22/81	40.49	878.61
05/27/81	40.15	878.95	07/05/81	40.25	878.85	08/14/81	40.24	878.86	09/22/81	40.46	878.64
05/27/81	40.15	878.95	07/06/81	40.26	878.84	08/14/81	40.27	878.83	09/23/81	40.47	878.63
05/28/81	40.12	878.98	07/06/81	40.25	878.85	08/15/81	40.27	878.83	09/23/81	40.48	878.62
05/28/81	40.15	878.95	07/07/81	40.27	878.83	08/15/81	40.31	878.79	09/24/81	40.50	878.60
05/29/81	40.10	879.00	07/07/81	40.26	878.84	08/16/81	40.34	878.76	09/24/81	40.48	878.62
05/29/81	40.20	878.90	07/08/81	40.27	878.83	08/16/81	40.31	878.79	09/25/81	40.48	878.62
05/30/81	40.21	878.89	07/08/81	40.36	878.74	08/17/81	40.34	878.76	09/25/81	40.40	878.70
05/30/81	40.29	878.81	07/09/81	40.36	878.74	08/17/81	40.34	878.76	09/26/81	40.41	878.69
05/31/81	40.18	878.92	07/09/81	40.39	878.71	08/18/81	40.34	878.76	09/26/81	40.37	878.73
05/31/81	40.25	878.85	07/10/81	40.39	878.71	08/18/81	40.34	878.76	09/27/81	40.51	878.59
06/01/81	40.17	878.93	07/10/81	40.37	878.73	08/19/81	40.34	878.76	09/27/81	40.41	878.69
06/01/81	40.20	878.90	07/11/81	40.35	878.75	08/19/81	40.35	878.75	09/28/81	40.46	878.64
06/02/81	40.19	878.91	07/11/81	40.37	878.73	08/20/81	40.31	878.79	09/28/81	40.52	878.58
06/02/81	40.17	878.93	07/12/81	40.36	878.74	08/20/81	40.34	878.76	09/29/81	40.46	878.64
06/03/81	40.17	878.93	07/12/81	40.37	878.73	08/21/81	40.32	878.78	09/29/81	40.47	878.63
06/03/81	40.22	878.88	07/13/81	40.37	878.73	08/21/81	40.31	878.79	09/30/81	40.47	878.63
06/04/81	40.21	878.89	07/13/81	40.40	878.70	08/22/81	40.32	878.78	09/30/81	40.43	878.67
06/04/81	40.17	878.93	07/14/81	40.20	878.90	08/22/81	40.30	878.80	10/01/81	40.44	878.66
06/05/81	40.17	878.93	07/14/81	40.38	878.72	08/23/81	40.31	878.79	10/01/81	40.49	878.61
06/05/81	40.21	878.89	07/15/81	40.22	878.88	08/23/81	40.30	878.80	10/02/81	40.49	878.61
06/06/81	40.22	878.88	07/15/81	40.20	878.90	08/24/81	40.27	878.83	10/02/81	40.43	878.67
06/06/81	40.19	878.91	07/16/81	40.21	878.89	08/24/81	40.31	878.79	10/03/81	40.43	878.67
06/07/81	40.18	878.92	07/16/81	40.20	878.90	08/25/81	40.27	878.83	10/03/81	40.36	878.74
06/07/81	40.17	878.93	07/17/81	40.21	878.89	08/25/81	40.29	878.81	10/04/81	40.40	878.70
06/08/81	40.17	878.93	07/17/81	40.24	878.86	08/26/81	40.31	878.79	10/04/81	40.36	878.74
06/08/81	40.18	878.92	07/18/81	40.24	878.86	08/26/81	40.28	878.82	10/05/81	40.41	878.69
06/09/81	40.19	878.91	07/18/81	40.27	878.83	08/27/81	40.30	878.80	10/05/81	40.38	878.72
06/09/81	40.17	878.93	07/19/81	40.26	878.84	08/27/81	40.34	878.76	10/06/81	40.43	878.67
06/09/81	40.19	878.91	07/19/81	40.23	878.87	08/28/81	40.31	878.79	10/06/81	40.38	878.72
06/10/81	40.19	878.91	07/20/81	40.26	878.84	08/28/81	40.33	878.77	10/07/81	40.38	878.72
06/10/81	40.23	878.87	07/20/81	40.23	878.87	08/29/81	40.27	878.83	10/07/81	40.43	878.67
06/11/81	40.23	878.87	07/21/81	40.25	878.85	08/29/81	40.31	878.79	10/08/81	40.38	878.72
06/11/81	40.26	878.84	07/21/81	40.28	878.82	08/30/81	40.27	878.83	10/08/81	40.39	878.71
06/12/81	40.28	878.82	07/21/81	40.24	878.86	08/30/81	40.25	878.85	10/08/81	40.35	878.75
06/12/81	40.24	878.86	07/22/81	40.22	878.88	08/31/81	40.29	878.81	10/09/81	40.36	878.74
06/13/81	40.23	878.87	07/22/81	40.24	878.86	08/31/81	40.23	878.87	10/09/81	40.35	878.75
06/13/81	40.17	878.93	07/23/81	40.22	878.88	09/01/81	40.32	878.78	10/10/81	40.36	878.74
06/14/81	40.18	878.92	07/23/81	40.20	878.90	09/01/81	40.29	878.81	10/10/81	40.39	878.71
06/14/81	40.20	878.90	07/24/81	40.24	878.86	09/02/81	40.28	878.82	10/11/81	40.42	878.68
06/15/81	40.23	878.87	07/24/81	40.20	878.90	09/02/81	40.31	878.79	10/11/81	40.39	878.71
06/15/81	40.19	878.91	07/25/81	40.24	878.86	09/02/81	40.31	878.79	10/12/81	40.33	878.77
06/16/81	40.26	878.84	07/25/81	40.28	878.82	09/03/81	40.30	878.80	10/12/81	40.40	878.70
06/16/81	40.23	878.87	07/26/81	40.30	878.80	09/03/81	40.38	878.72	10/13/81	40.34	878.76
06/17/81	40.20	878.90	07/26/81	40.28	878.82	09/04/81	40.38	878.72	10/13/81	40.36	878.74
06/17/81	40.25	878.85	07/27/81	40.30	878.80	09/04/81	40.40	878.70	10/14/81	40.36	878.74
06/18/81	40.23	878.87	07/27/81	40.31	878.79	09/05/81	40.37	878.73	10/14/81	40.39	878.71
06/18/81	40.30	878.80	07/28/81	40.28	878.82	09/05/81	40.39	878.71	10/15/81	40.39	878.71
06/19/81	40.28	878.82	07/28/81	40.31	878.79	09/06/81	40.32	878.78	10/15/81	40.40	878.70
06/19/81	40.30	878.80	07/29/81	40.26	878.84	09/06/81	40.37	878.73	10/16/81	40.40	878.70
06/20/81	40.27	878.83	07/29/81	40.28	878.82	09/07/81	40.34	878.76	10/16/81	40.34	878.76
06/20/81	40.29	878.81	07/30/81	40.26	878.84	09/07/81	40.37	878.73	10/17/81	40.33	878.77
06/21/81	40.27	878.83	07/30/81	40.23	878.87	09/08/81	40.39	878.71	10/17/81	40.27	878.83
06/21/81	40.19	878.91	07/31/81	40.24	878.86	09/08/81	40.36	878.74	10/18/81	40.32	878.78
06/22/81	40.19	878.91	07/31/81	40.28	878.82	09/09/81	40.36	878.74	10/18/81	40.37	878.73
06/22/81	40.26	878.84	08/01/81	40.24	878.86	09/09/81	40.31	878.79	10/19/81	40.37	878.73
06/23/81	40.20	878.90	08/01/81	40.29	878.81	09/10/81	40.31	878.79	10/19/81	40.31	878.79
06/23/81	40.25	878.85	08/02/81	40.25	878.85	09/10/81	40.33	878.77	10/20/81	40.31	878.79
06/24/81	40.22	878.88	08/02/81	40.23	878.87	09/11/81	40.32	878.78	10/20/81	40.42	878.68
06/24/81	40.27	878.83	08/03/81	40.24	878.86	09/11/81	40.38	878.72	10/21/81	40.44	878.66

137-049-27BBC **(Continued)** MP Elev (msl,ft)=919.1

Horace Aquifer SI (ft.)=249-300

Date	Depth to Water (ft)	WL Elev (msl, ft)	Date	Depth to Water (ft)	WL Elev (msl, ft)	Date	Depth to Water (ft)	WL Elev (msl, ft)	Date	Depth to Water (ft)	WL Elev (msl, ft)
10/21/81	40.42	878.68	11/30/81	40.39	878.71	01/08/82	40.40	878.70	02/17/82	40.22	878.88
10/22/81	40.41	878.69	12/01/81	40.34	878.76	01/09/82	40.47	878.63	02/18/82	40.21	878.89
10/22/81	40.45	878.65	12/01/81	40.29	878.81	01/09/82	40.39	878.71	02/18/82	40.25	878.85
10/23/81	40.38	878.72	12/02/81	40.30	878.80	01/10/82	40.48	878.62	02/19/82	40.18	878.92
10/23/81	40.45	878.65	12/02/81	40.31	878.79	01/10/82	40.41	878.69	02/19/82	40.25	878.85
10/24/81	40.30	878.80	12/03/81	40.31	878.79	01/11/82	40.37	878.73	02/20/82	40.23	878.87
10/24/81	40.37	878.73	12/03/81	40.35	878.75	01/11/82	40.41	878.69	02/20/82	40.18	878.92
10/25/81	40.33	878.77	12/03/81	40.39	878.71	01/12/82	40.36	878.74	02/21/82	40.23	878.87
10/25/81	40.36	878.74	12/04/81	40.39	878.71	01/12/82	40.39	878.71	02/21/82	40.22	878.88
10/26/81	40.31	878.79	12/04/81	40.42	878.68	01/13/82	40.36	878.74	02/22/82	40.30	878.80
10/26/81	40.38	878.72	12/05/81	40.36	878.74	01/13/82	40.32	878.78	02/22/82	40.22	878.88
10/27/81	40.39	878.71	12/05/81	40.42	878.68	01/14/82	40.23	878.87	02/23/82	40.31	878.79
10/27/81	40.47	878.63	12/06/81	40.31	878.79	01/14/82	40.32	878.78	02/23/82	40.28	878.82
10/28/81	40.47	878.63	12/06/81	40.35	878.75	01/15/82	40.23	878.87	02/24/82	40.29	878.81
10/28/81	40.43	878.67	12/07/81	40.41	878.69	01/15/82	40.34	878.76	02/24/82	40.37	878.73
10/29/81	40.45	878.65	12/07/81	40.32	878.78	01/16/82	40.33	878.77	02/25/82	40.36	878.74
10/29/81	40.38	878.72	12/08/81	40.41	878.69	01/16/82	40.37	878.73	02/25/82	40.37	878.73
10/30/81	40.48	878.62	12/08/81	40.48	878.62	01/17/82	40.33	878.77	02/26/82	40.31	878.79
10/30/81	40.37	878.73	12/09/81	40.49	878.61	01/17/82	40.24	878.86	02/26/82	40.36	878.74
10/31/81	40.55	878.55	12/09/81	40.48	878.62	01/18/82	40.26	878.84	02/27/82	40.32	878.78
10/31/81	40.48	878.62	12/10/81	40.42	878.68	01/18/82	40.29	878.81	02/27/82	40.29	878.81
11/01/81	40.55	878.55	12/10/81	40.48	878.62	01/19/82	40.39	878.71	02/28/82	40.30	878.80
11/01/81	40.52	878.58	12/11/81	40.44	878.66	01/19/82	40.28	878.82	02/28/82	40.27	878.83
11/02/81	40.54	878.56	12/11/81	40.41	878.69	01/20/82	40.36	878.74	03/01/82	40.29	878.81
11/02/81	40.52	878.58	12/12/81	40.43	878.67	01/20/82	40.39	878.71	03/01/82	40.31	878.79
11/03/81	40.51	878.59	12/12/81	40.40	878.70	01/21/82	40.38	878.72	03/02/82	40.31	878.79
11/03/81	40.54	878.56	12/13/81	40.42	878.68	01/21/82	40.39	878.71	03/02/82	40.29	878.81
11/04/81	40.53	878.57	12/13/81	40.45	878.65	01/22/82	40.38	878.72	03/03/82	40.31	878.79
11/04/81	40.52	878.58	12/14/81	40.43	878.67	01/22/82	40.21	878.89	03/03/82	40.28	878.82
11/05/81	40.58	878.52	12/14/81	40.45	878.65	01/23/82	40.28	878.82	03/04/82	40.28	878.82
11/05/81	40.53	878.57	12/15/81	40.44	878.66	01/23/82	40.18	878.92	03/04/82	40.25	878.85
11/06/81	40.58	878.52	12/15/81	40.43	878.67	01/24/82	40.28	878.82	03/05/82	40.26	878.84
11/06/81	40.55	878.55	12/16/81	40.44	878.66	01/24/82	40.23	878.87	03/05/82	40.29	878.81
11/07/81	40.53	878.57	12/16/81	40.48	878.62	01/25/82	40.30	878.80	03/06/82	40.31	878.79
11/07/81	40.56	878.54	12/17/81	40.50	878.60	01/25/82	40.27	878.83	03/06/82	40.23	878.87
11/08/81	40.56	878.54	12/17/81	40.48	878.62	01/26/82	40.30	878.80	03/07/82	40.31	878.79
11/08/81	40.61	878.49	12/18/81	40.50	878.60	01/26/82	40.15	878.95	03/07/82	40.26	878.84
11/09/81	40.53	878.57	12/18/81	40.50	878.60	01/27/82	40.13	878.97	03/08/82	40.31	878.79
11/09/81	40.61	878.49	12/19/81	40.49	878.61	01/27/82	40.24	878.86	03/08/82	40.17	878.93
11/10/81	40.50	878.60	12/19/81	40.39	878.71	01/28/82	40.24	878.86	03/09/82	40.31	878.79
11/10/81	40.54	878.56	12/20/81	40.26	878.84	01/28/82	40.29	878.81	03/09/82	40.22	878.88
11/11/81	40.50	878.60	12/20/81	40.38	878.72	01/29/82	40.28	878.82	03/10/82	40.16	878.94
11/11/81	40.54	878.56	12/21/81	40.27	878.83	01/29/82	40.25	878.85	03/10/82	40.22	878.88
11/12/81	40.50	878.60	12/21/81	40.24	878.86	01/30/82	40.27	878.83	03/11/82	40.24	878.86
11/12/81	40.46	878.64	12/22/81	40.33	878.77	01/30/82	40.35	878.75	03/11/82	40.16	878.94
11/13/81	40.43	878.67	12/22/81	40.27	878.83	01/31/82	40.35	878.75	03/12/82	40.08	879.02
11/13/81	40.47	878.63	12/23/81	40.34	878.76	01/31/82	40.29	878.81	03/12/82	40.16	878.94
11/14/81	40.44	878.66	12/23/81	40.30	878.80	02/01/82	40.28	878.82	03/13/82	40.22	878.88
11/14/81	40.41	878.69	12/24/81	40.34	878.76	02/01/82	40.29	878.81	03/13/82	40.08	879.02
11/15/81	40.39	878.71	12/24/81	40.36	878.74	02/02/82	40.35	878.75	03/14/82	40.23	878.87
11/15/81	40.41	878.69	12/25/81	40.36	878.74	02/02/82	40.29	878.81	03/14/82	40.22	878.88
11/16/81	40.43	878.67	12/25/81	40.35	878.75	02/03/82	40.35	878.75	03/15/82	40.22	878.88
11/16/81	40.40	878.70	12/26/81	40.30	878.80	02/03/82	40.36	878.74	03/15/82	40.17	878.93
11/17/81	40.43	878.67	12/26/81	40.35	878.75	02/04/82	40.35	878.75	03/16/82	40.17	878.93
11/17/81	40.44	878.66	12/27/81	40.35	878.75	02/04/82	40.36	878.74	03/16/82	40.22	878.88
11/18/81	40.44	878.66	12/27/81	40.28	878.82	02/05/82	40.36	878.74	03/17/82	40.22	878.88
11/18/81	40.42	878.68	12/28/81	40.36	878.74	02/05/82	40.33	878.77	03/17/82	40.23	878.87
11/19/81	40.47	878.63	12/28/81	40.40	878.70	02/06/82	40.22	878.88	03/18/82	40.27	878.83
11/19/81	40.44	878.66	12/29/81	40.41	878.69	02/06/82	40.33	878.77	03/18/82	40.22	878.88
11/20/81	40.48	878.62	12/29/81	40.40	878.70	02/07/82	40.29	878.81	03/19/82	40.27	878.83
11/20/81	40.47	878.63	12/30/81	40.32	878.78	02/07/82	40.23	878.87	03/19/82	40.16	878.94
11/21/81	40.47	878.63	12/30/81	40.41	878.69	02/08/82	40.28	878.82	03/20/82	40.15	878.95
11/21/81	40.43	878.67	12/31/81	40.33	878.77	02/08/82	40.31	878.79	03/20/82	40.10	879.00
11/22/81	40.43	878.67	12/31/81	40.36	878.74	02/09/82	40.31	878.79	03/21/82	40.18	878.92
11/22/81	40.40	878.70				02/09/82	40.27	878.83	03/21/82	40.14	878.96
11/23/81	40.42	878.68	01/01/82	40.33	878.77	02/10/82	40.27	878.83	03/22/82	40.15	878.95
11/23/81	40.38	878.72	01/01/82	40.37	878.73	02/10/82	40.22	878.88	03/22/82	40.18	878.92
11/24/81	40.42	878.68	01/02/82	40.32	878.78	02/11/82	40.31	878.79	03/23/82	40.14	878.96
11/24/81	40.39	878.71	01/02/82	40.27	878.83	02/11/82	40.23	878.87	03/23/82	40.07	879.03
11/25/81	40.35	878.75	01/03/82	40.35	878.75	02/12/82	40.33	878.77	03/24/82	40.09	879.01
11/25/81	40.40	878.70	01/03/82	40.31	878.79	02/12/82	40.31	878.79	03/24/82	40.18	878.92
11/26/81	40.37	878.73	01/04/82	40.34	878.76	02/13/82	40.31	878.79	03/25/82	40.21	878.89
11/26/81	40.32	878.78	01/04/82	40.29	878.81	02/13/82	40.23	878.87	03/25/82	40.18	878.92
11/27/81	40.44	878.66	01/05/82	40.25	878.85	02/14/82	40.23	878.87	03/26/82	40.25	878.85
11/27/81	40.38	878.72	01/05/82	40.32	878.78	02/14/82	40.15	878.95	03/26/82	40.21	878.89
11/28/81	40.44	878.66	01/06/82	40.39	878.71	02/15/82	40.25	878.85	03/27/82	40.26	878.84
11/28/81	40.44	878.66	01/06/82	40.33	878.77	02/15/82	40.17	878.93	03/27/82	40.21	878.89
11/29/81	40.39	878.71	01/07/82	40.36	878.74	02/16/82	40.25	878.85	03/28/82	40.16	878.94
11/29/81	40.44	878.66	01/07/82	40.39	878.71	02/16/82	40.22	878.88	03/28/82	40.21	878.89
11/30/81	40.34	878.76	01/08/82	40.36	878.74	02/17/82	40.20	878.90	03/29/82	40.16	878.94

137-049-27BBC **(Continued)** MP Elev (msl,ft)=919.1

Horace Aquifer SI (ft.)=249-300

Date	Depth to Water (ft)	WL Elev (msl. ft)
03/29/82	40.03	879.07
03/30/82	40.02	879.08
03/30/82	39.85	879.25
03/31/82	39.97	879.13
03/31/82	39.85	879.25
04/01/82	39.97	879.13
04/01/82	39.91	879.19
04/02/82	39.92	879.18
04/02/82	39.85	879.25
04/03/82	40.18	878.92
04/03/82	39.93	879.17
04/04/82	40.19	878.91
04/04/82	40.29	878.81
04/05/82	40.35	878.75
04/05/82	40.29	878.81
04/06/82	40.36	878.74
04/06/82	40.34	878.76
04/07/82	40.35	878.75
04/07/82	40.33	878.77
04/08/82	40.31	878.79
04/08/82	40.35	878.75
04/09/82	40.31	878.79
04/09/82	40.27	878.83
04/10/82	40.34	878.76
04/10/82	40.29	878.81
04/11/82	40.33	878.77
04/11/82	40.25	878.85
04/12/82	40.19	878.91
04/12/82	40.26	878.84
04/13/82	40.26	878.84
04/13/82	40.31	878.79
04/14/82	40.29	878.81
04/14/82	40.22	878.88
04/15/82	40.23	878.87
04/15/82	40.21	878.89
04/16/82	40.24	878.86
04/16/82	40.33	878.77
04/17/82	40.33	878.77
04/17/82	40.36	878.74
04/18/82	40.34	878.76
04/18/82	40.36	878.74
04/19/82	40.37	878.73
04/19/82	40.42	878.68
04/20/82	40.47	878.63
04/20/82	40.42	878.68
04/21/82	40.50	878.60
04/21/82	40.47	878.63
04/22/82	40.47	878.63
04/22/82	40.50	878.60
04/23/82	40.38	878.72
04/23/82	40.47	878.63
04/24/82	40.35	878.75
04/24/82	40.38	878.72
04/25/82	40.44	878.66
04/25/82	40.37	878.73
04/26/82	40.49	878.61
04/26/82	40.45	878.65
04/27/82	40.53	878.57
04/27/82	40.49	878.61
04/28/82	40.51	878.59
04/28/82	40.50	878.60
04/29/82	40.50	878.60
04/29/82	40.48	878.62
04/30/82	40.48	878.62
04/30/82	40.50	878.60
05/01/82	40.49	878.61
05/01/82	40.50	878.60
05/02/82	40.48	878.62
05/02/82	40.49	878.61
05/03/82	40.48	878.62
05/03/82	40.43	878.67
05/04/82	40.42	878.68
05/04/82	40.52	878.58
05/05/82	40.52	878.58
05/05/82	40.67	878.43
05/06/82	40.52	878.58
05/06/82	40.65	878.45
05/07/82	40.54	878.56
05/07/82	40.57	878.53
05/08/82	40.57	878.53
05/08/82	40.58	878.52
05/09/82	40.50	878.60
05/09/82	40.58	878.52
05/10/82	40.50	878.60
05/10/82	40.46	878.64
05/11/82	40.48	878.62
05/11/82	40.54	878.56
05/12/82	40.52	878.58
05/12/82	40.54	878.56
05/13/82	40.51	878.59
05/13/82	40.52	878.58
05/14/82	40.52	878.58
05/14/82	40.46	878.64
05/15/82	40.48	878.62
05/15/82	40.46	878.64
05/16/82	40.44	878.66
05/16/82	40.49	878.61
05/17/82	40.43	878.67
05/17/82	40.45	878.65
05/18/82	40.44	878.66
05/18/82	40.42	878.68
05/19/82	40.44	878.66
05/19/82	40.47	878.63
05/20/82	40.51	878.59
05/20/82	40.48	878.62
05/20/82	40.54	878.56
05/21/82	40.50	878.60
05/21/82	40.53	878.57
05/22/82	40.60	878.50
05/22/82	40.52	878.58
05/23/82	40.55	878.55
05/23/82	40.52	878.58
05/24/82	40.55	878.55
05/24/82	40.53	878.57
05/25/82	40.51	878.59
05/25/82	40.53	878.57
05/26/82	40.51	878.59
05/26/82	40.50	878.60
05/27/82	40.57	878.53
05/27/82	40.50	878.60
05/28/82	40.58	878.52
05/28/82	40.66	878.44
05/29/82	40.60	878.50
05/29/82	40.70	878.40
05/30/82	40.63	878.47
05/30/82	40.59	878.51
05/31/82	40.57	878.53
05/31/82	40.59	878.51
06/01/82	40.59	878.51
06/01/82	40.63	878.47
06/02/82	40.63	878.47
06/02/82	40.75	878.35
06/03/82	40.64	878.46
06/03/82	40.67	878.43
06/04/82	40.62	878.48
06/04/82	40.78	878.32
06/05/82	40.64	878.46
06/05/82	40.82	878.28
06/06/82	40.53	878.57
06/06/82	40.64	878.46
06/07/82	40.54	878.56
06/07/82	40.62	878.48
06/08/82	40.64	878.46
06/08/82	40.62	878.48
06/09/82	40.63	878.47
06/09/82	40.58	878.52
06/10/82	40.65	878.45
06/10/82	40.62	878.48
06/11/82	40.63	878.47
06/11/82	40.64	878.46
06/12/82	40.64	878.46
06/12/82	40.66	878.44
06/13/82	40.63	878.47
06/13/82	40.65	878.45
06/14/82	40.63	878.47
06/14/82	40.61	878.49
06/15/82	40.66	878.44
06/15/82	40.63	878.47
06/16/82	40.66	878.44
06/16/82	40.63	878.47
06/17/82	40.65	878.45
06/17/82	40.70	878.40
06/18/82	40.70	878.40
06/18/82	40.90	878.20
06/19/82	40.79	878.31
06/19/82	40.68	878.42
06/20/82	40.70	878.40
06/20/82	40.87	878.23
06/21/82	40.93	878.17
06/21/82	40.75	878.35
06/22/82	40.77	878.33
06/22/82	40.79	878.31
06/23/82	40.78	878.32
06/23/82	40.77	878.33
06/24/82	40.82	878.28
06/24/82	40.76	878.34
06/25/82	40.82	878.28
06/25/82	40.84	878.26
06/26/82	40.81	878.29
06/26/82	40.83	878.27
06/27/82	40.81	878.29
06/27/82	40.82	878.28
06/28/82	40.82	878.28
06/28/82	40.75	878.35
06/29/82	40.77	878.33
06/29/82	40.81	878.29
06/30/82	40.87	878.23
06/30/82	40.81	878.29
06/30/82	40.85	878.25
07/01/82	40.86	878.24
07/01/82	40.82	878.28
07/02/82	40.82	878.28
07/02/82	40.79	878.31
07/03/82	40.79	878.31
07/03/82	40.95	878.15
07/04/82	40.98	878.12
07/04/82	40.81	878.29
07/05/82	40.79	878.31
07/05/82	40.82	878.28
07/06/82	40.85	878.25
07/06/82	40.82	878.28
07/07/82	40.96	878.14
07/07/82	40.85	878.25
07/08/82	40.92	878.18
07/08/82	40.97	878.13
07/09/82	40.89	878.21
07/09/82	40.93	878.17
07/10/82	40.92	878.18
07/10/82	40.91	878.19
07/11/82	40.91	878.19
07/11/82	41.08	878.02
07/12/82	41.12	877.98
07/12/82	40.99	878.11
07/13/82	40.99	878.11
07/13/82	41.00	878.10
07/14/82	40.97	878.13
07/14/82	40.99	878.11
07/15/82	40.95	878.15
07/15/82	40.96	878.14
07/16/82	40.91	878.19
07/16/82	40.94	878.16
07/17/82	40.92	878.18
07/17/82	41.13	877.97
07/18/82	41.15	877.95
07/18/82	41.01	878.09
07/19/82	41.03	878.07
07/19/82	40.98	878.12
07/20/82	41.01	878.09
07/20/82	40.97	878.13
07/21/82	41.06	878.04
07/21/82	41.00	878.10
07/22/82	41.06	878.04
07/22/82	41.08	878.02
07/23/82	41.08	878.02
07/23/82	41.05	878.05
07/24/82	41.08	878.02
07/24/82	41.04	878.06
07/25/82	41.11	877.99
07/25/82	41.08	878.02
07/26/82	41.11	877.99
07/26/82	41.12	877.98
07/27/82	41.14	877.96
07/27/82	41.12	877.98
07/28/82	41.13	877.97
07/28/82	41.15	877.95
07/29/82	41.12	877.98
07/29/82	41.15	877.95
07/30/82	41.32	877.78
07/30/82	41.15	877.95
07/31/82	41.36	877.74
07/31/82	41.17	877.93
08/01/82	41.20	877.90
08/01/82	41.16	877.94
08/02/82	41.12	877.98
08/02/82	41.16	877.94
08/03/82	41.14	877.96
08/03/82	41.18	877.92
08/04/82	41.18	877.92
08/04/82	41.40	877.70
08/05/82	41.29	877.81
08/05/82	41.27	877.83
08/06/82	41.29	877.81
08/06/82	41.53	877.57
08/07/82	41.28	877.82
08/07/82	41.40	877.70
08/08/82	41.29	877.81
08/08/82	41.28	877.82
08/09/82	41.31	877.79
08/09/82	41.29	877.81
08/10/82	41.34	877.76
08/10/82	41.32	877.78
08/11/82	41.34	877.76
08/11/82	41.32	877.78
08/12/82	41.33	877.77
08/12/82	41.30	877.80
08/13/82	41.32	877.78
08/13/82	41.30	877.80
08/14/82	41.32	877.78
08/14/82	41.34	877.76
08/15/82	41.32	877.78
08/15/82	41.34	877.76
08/16/82	41.34	877.76
08/16/82	41.38	877.72
08/17/82	41.37	877.73
08/17/82	41.35	877.75
08/18/82	41.32	877.78
08/18/82	41.35	877.75
08/19/82	41.32	877.78
08/19/82	41.40	877.70
08/20/82	41.40	877.70
08/20/82	41.65	877.45
08/21/82	41.37	877.73
08/21/82	41.56	877.54
08/22/82	41.37	877.73
08/22/82	41.39	877.71
08/23/82	41.38	877.72
08/23/82	41.41	877.69
08/24/82	41.41	877.69
08/24/82	41.39	877.71
08/24/82	41.40	877.70
08/25/82	41.39	877.71
08/25/82	41.42	877.68
08/25/82	41.40	877.70
08/26/82	41.39	877.71
08/26/82	41.41	877.69
08/27/82	41.46	877.64
08/27/82	41.41	877.69
08/28/82	41.51	877.59
08/28/82	41.44	877.66
08/29/82	41.43	877.67
08/29/82	41.48	877.62
08/30/82	41.46	877.64
08/30/82	41.49	877.61
08/31/82	41.65	877.45
08/31/82	41.44	877.66
09/01/82	41.49	877.61
09/01/82	41.71	877.39
09/02/82	41.50	877.60
09/02/82	41.52	877.58
09/03/82	41.51	877.59

137-049-27BBC **(Continued)** MP Elev (msl,ft)=919.1

Horace Aquifer SI (ft.)=249-300

Date	Depth to Water (ft)	WL Elev (msl, ft)
09/03/82	41.54	877.56
09/04/82	41.55	877.55
09/04/82	41.56	877.54
09/05/82	41.56	877.54
09/05/82	41.55	877.55
09/06/82	41.53	877.57
09/06/82	41.55	877.55
09/07/82	41.53	877.57
09/07/82	41.53	877.57
09/08/82	41.51	877.59
09/08/82	41.53	877.57
09/09/82	41.50	877.60
09/09/82	41.51	877.59
09/10/82	41.50	877.60
09/10/82	41.49	877.61
09/11/82	41.49	877.61
09/11/82	41.48	877.62
09/12/82	41.49	877.61
09/12/82	41.48	877.62
09/13/82	41.49	877.61
09/13/82	41.49	877.61
09/14/82	41.50	877.60
09/14/82	41.49	877.61
09/15/82	41.50	877.60
09/15/82	41.52	877.58
09/16/82	41.54	877.56
09/16/82	41.52	877.58
09/17/82	41.54	877.56
09/17/82	41.55	877.55
09/18/82	41.56	877.54
09/18/82	41.55	877.55
09/19/82	41.56	877.54
09/19/82	41.57	877.53
09/20/82	41.57	877.53
09/20/82	41.57	877.53
09/21/82	41.58	877.52
09/21/82	41.58	877.52
09/22/82	41.56	877.54
09/22/82	41.58	877.52
09/23/82	41.56	877.54
09/23/82	41.55	877.55
09/24/82	41.53	877.57
09/24/82	41.55	877.55
09/25/82	41.67	877.43
09/25/82	41.52	877.58
09/26/82	41.56	877.54
09/26/82	41.70	877.40
09/27/82	41.69	877.41
09/27/82	41.55	877.55
09/28/82	41.68	877.42
09/28/82	41.50	877.60
09/29/82	41.51	877.59
09/29/82	41.58	877.52
09/30/82	41.55	877.55
09/30/82	41.54	877.56
10/30/82	41.12	877.98
11/16/82	41.10	878.00
11/18/82	41.11	877.99
11/21/82	41.12	877.98
11/29/82	41.01	878.09
03/24/83	41.04	878.06
03/24/83	41.04	878.06
03/24/83	41.05	878.05
03/25/83	41.07	878.03
03/25/83	41.03	878.07
03/26/83	41.05	878.05
03/26/83	41.06	878.04
03/27/83	41.04	878.06
03/27/83	41.07	878.03
03/28/83	41.08	878.02
03/28/83	41.07	878.03
03/29/83	41.05	878.05
03/29/83	41.09	878.01
03/30/83	40.99	878.11
03/30/83	41.05	878.05
03/31/83	40.95	878.15
03/31/83	40.99	878.11
04/01/83	41.03	878.07
04/01/83	40.96	878.14
04/02/83	41.03	878.07
04/02/83	41.02	878.08
04/03/83	41.06	878.04
04/03/83	41.02	878.08
04/04/83	41.11	877.99
04/04/83	41.06	878.04
04/05/83	41.12	877.98
04/05/83	41.11	877.99
04/06/83	41.11	877.99
04/06/83	41.09	878.01
04/07/83	41.13	877.97
04/07/83	41.10	878.00
04/08/83	41.14	877.96
04/08/83	41.13	877.97
04/09/83	41.10	878.00
04/09/83	41.13	877.97
04/10/83	41.09	878.01
04/10/83	41.11	877.99
04/11/83	41.11	877.99
04/11/83	41.12	877.98
04/12/83	41.13	877.97
04/12/83	41.10	878.00
04/13/83	41.07	878.03
04/13/83	41.09	878.01
04/14/83	41.10	878.00
04/14/83	41.07	878.03
04/15/83	41.14	877.96
04/15/83	41.11	877.99
04/16/83	41.18	877.92
04/16/83	41.15	877.95
04/17/83	41.15	877.95
04/17/83	41.16	877.94
04/18/83	41.11	877.99
04/18/83	41.16	877.94
04/18/83	41.14	877.96
04/19/83	41.14	877.96
04/19/83	41.13	877.97
04/19/83	41.14	877.96
04/20/83	41.15	877.95
04/20/83	41.14	877.96
04/21/83	41.14	877.96
04/21/83	41.15	877.95
04/22/83	41.15	877.95
04/22/83	41.19	877.91
04/23/83	41.19	877.91
04/23/83	41.21	877.89
04/24/83	41.15	877.95
04/24/83	41.20	877.90
04/25/83	41.08	878.02
04/25/83	41.15	877.95
04/26/83	41.06	878.04
04/26/83	41.13	877.97
04/27/83	41.13	877.97
04/27/83	41.17	877.93
04/28/83	41.17	877.93
04/28/83	41.19	877.91
04/29/83	41.20	877.90
04/29/83	41.18	877.92
04/30/83	41.19	877.91
04/30/83	41.18	877.92
05/01/83	41.18	877.92
05/01/83	41.15	877.95
05/02/83	41.17	877.93
05/02/83	41.15	877.95
05/03/83	41.18	877.92
05/03/83	41.29	877.81
05/04/83	41.36	877.74
05/04/83	41.29	877.81
05/05/83	41.36	877.74
05/05/83	41.40	877.70
05/06/83	41.40	877.70
05/06/83	41.33	877.77
05/07/83	41.38	877.72
05/07/83	41.34	877.76
05/08/83	41.37	877.73
05/08/83	41.32	877.78
05/09/83	41.33	877.77
05/09/83	41.27	877.83
05/10/83	41.28	877.82
05/10/83	41.26	877.84
05/11/83	41.21	877.89
05/11/83	41.29	877.81
05/12/83	41.15	877.95
05/12/83	41.21	877.89
05/13/83	41.21	877.89
05/13/83	41.17	877.93
05/14/83	41.24	877.86
05/14/83	41.21	877.89
05/15/83	41.22	877.88
05/15/83	41.24	877.86
05/16/83	41.26	877.84
05/16/83	41.24	877.86
05/17/83	41.24	877.86
05/17/83	41.23	877.87
05/18/83	41.32	877.78
05/18/83	41.23	877.87
05/19/83	41.22	877.88
05/19/83	41.26	877.84
05/20/83	41.26	877.84
05/20/83	41.23	877.87
05/20/83	41.24	877.86
05/21/83	41.17	877.93
05/21/83	41.22	877.88
05/22/83	41.17	877.93
05/22/83	41.21	877.89
05/23/83	41.21	877.89
05/23/83	41.28	877.82
05/24/83	41.21	877.89
05/24/83	41.27	877.83
05/25/83	41.27	877.83
05/25/83	41.29	877.81
05/26/83	41.28	877.82
05/26/83	41.23	877.87
05/27/83	41.22	877.88
05/27/83	41.44	877.66
05/28/83	41.45	877.65
05/28/83	41.29	877.81
05/29/83	41.42	877.68
05/29/83	41.30	877.80
05/30/83	41.46	877.64
05/30/83	41.30	877.80
05/31/83	41.40	877.70
05/31/83	41.31	877.79
06/01/83	41.33	877.77
06/01/83	41.32	877.78
06/02/83	41.53	877.57
06/02/83	41.32	877.78
06/03/83	41.47	877.63
06/03/83	41.33	877.77
06/04/83	41.38	877.72
06/04/83	41.39	877.71
06/05/83	41.39	877.71
06/05/83	41.54	877.56
06/06/83	41.59	877.51
06/06/83	41.40	877.70
06/07/83	41.41	877.69
06/07/83	41.36	877.74
06/08/83	41.36	877.74
06/08/83	41.39	877.71
06/09/83	41.67	877.43
06/09/83	41.40	877.70
06/10/83	41.41	877.69
06/10/83	41.55	877.55
06/11/83	41.39	877.71
06/11/83	41.43	877.67
06/12/83	41.36	877.74
06/12/83	41.39	877.71
06/13/83	41.35	877.75
06/13/83	41.41	877.69
06/14/83	41.38	877.72
06/14/83	41.39	877.71
06/15/83	41.37	877.73
06/15/83	41.42	877.68
06/16/83	41.42	877.68
06/16/83	41.46	877.64
06/17/83	41.46	877.64
06/17/83	41.74	877.36
06/18/83	41.52	877.58
06/18/83	41.73	877.37
06/19/83	41.52	877.58
06/19/83	41.48	877.62
06/20/83	41.46	877.64
06/20/83	41.48	877.62
06/21/83	41.50	877.60
06/21/83	41.48	877.62
06/21/83	41.46	877.64
06/22/83	41.52	877.58
06/22/83	41.55	877.55
06/22/83	41.44	877.66
06/23/83	41.65	877.45
06/23/83	41.55	877.55
06/24/83	41.64	877.46
06/24/83	41.77	877.33
06/25/83	41.62	877.48
06/25/83	41.82	877.28
06/26/83	41.85	877.25
06/26/83	41.66	877.44
06/27/83	41.71	877.39
06/27/83	41.66	877.44
06/28/83	41.73	877.37
06/28/83	41.71	877.39
06/29/83	41.73	877.37
06/29/83	41.58	877.52
06/30/83	41.57	877.53
06/30/83	41.56	877.54
07/01/83	41.58	877.52
07/01/83	41.56	877.54
07/02/83	41.58	877.52
07/02/83	41.33	877.77
07/03/83	41.33	877.77
07/03/83	41.24	877.86
07/04/83	41.23	877.87
07/04/83	41.37	877.73
07/05/83	41.43	877.67
07/05/83	41.37	877.73
07/06/83	41.44	877.66
07/06/83	41.43	877.67
07/07/83	41.44	877.66
07/07/83	41.45	877.65
07/08/83	41.48	877.62
07/08/83	41.45	877.65
07/09/83	41.50	877.60
07/09/83	41.48	877.62
07/10/83	41.46	877.64
07/10/83	41.48	877.62
07/11/83	41.48	877.62
07/11/83	41.53	877.57
07/12/83	41.53	877.57
07/12/83	41.54	877.56
07/13/83	41.53	877.57
07/13/83	41.52	877.58
07/14/83	41.53	877.57
07/14/83	41.52	877.58
07/15/83	41.64	877.46
07/15/83	41.53	877.57
07/16/83	41.58	877.52
07/16/83	41.53	877.57
07/17/83	41.59	877.51
07/17/83	41.50	877.60
07/18/83	41.54	877.56
07/18/83	41.51	877.59
07/19/83	41.53	877.57
07/19/83	41.56	877.54
07/20/83	41.57	877.53
07/20/83	41.53	877.57
07/21/83	41.52	877.58
07/21/83	41.56	877.54
07/22/83	41.58	877.52
07/22/83	41.56	877.54
07/23/83	41.60	877.50
07/23/83	41.57	877.53
07/24/83	41.60	877.50
07/24/83	41.63	877.47
07/25/83	41.69	877.41
07/25/83	41.65	877.45
07/25/83	41.63	877.47
07/26/83	41.65	877.45
07/26/83	41.68	877.42
07/27/83	41.65	877.45
07/27/83	41.65	877.45

137-049-27BBC **(Continued)** MP Elev (msl,ft)=919.1

Horace Aquifer SI (ft.)=249-300

Date	Depth to Water (ft)	WL Elev (msl. ft)	Date	Depth to Water (ft)	WL Elev (msl. ft)	Date	Depth to Water (ft)	WL Elev (msl. ft)	Date	Depth to Water (ft)	WL Elev (msl. ft)
07/26/83	41.69	877.41	09/04/83	42.09	877.01	10/13/83	42.27	876.83	11/22/83	42.49	876.61
07/26/83	41.65	877.45	09/05/83	41.99	877.11	10/13/83	42.30	876.80	11/22/83	42.47	876.63
07/29/83	41.82	877.28	09/05/83	42.03	877.07	10/14/83	42.36	876.74	11/23/83	42.41	876.69
07/29/83	41.69	877.41	09/06/83	42.00	877.10	10/14/83	42.30	876.80	11/23/83	42.48	876.62
07/29/83	42.00	877.10	09/06/83	42.06	877.04	10/15/83	42.36	876.74	11/24/83	42.44	876.66
07/30/83	41.64	877.46	09/07/83	42.09	877.01	10/15/83	42.30	876.80	11/24/83	42.43	876.67
07/30/83	41.87	877.23	09/07/83	42.05	877.05	10/16/83	42.30	876.80	11/25/83	42.44	876.66
07/31/83	41.65	877.45	09/08/83	42.06	877.04	10/16/83	42.35	876.75	11/25/83	42.49	876.61
07/31/83	41.67	877.43	09/08/83	42.02	877.08	10/17/83	42.35	876.75	11/26/83	42.49	876.61
08/01/83	41.67	877.43	09/09/83	42.20	876.90	10/17/83	42.38	876.72	11/26/83	42.58	876.52
08/01/83	41.69	877.41	09/09/83	42.06	877.04	10/18/83	42.36	876.74	11/27/83	42.59	876.51
08/02/83	41.68	877.42	09/10/83	42.22	876.88	10/18/83	42.38	876.72	11/27/83	42.54	876.56
08/02/83	41.65	877.45	09/10/83	42.10	877.00	10/19/83	42.37	876.73	11/28/83	42.53	876.57
08/03/83	41.65	877.45	09/11/83	42.13	876.97	10/19/83	42.35	876.75	11/28/83	42.47	876.63
08/03/83	41.70	877.40	09/11/83	42.17	876.93	10/20/83	42.39	876.71	11/28/83	42.46	876.64
08/04/83	41.70	877.40	09/12/83	42.14	876.96	10/20/83	42.37	876.73	11/29/83	42.45	876.65
08/04/83	41.72	877.38	09/12/83	42.19	876.91	10/21/83	42.39	876.71	11/29/83	42.50	876.60
08/05/83	41.74	877.36	09/13/83	42.21	876.89	10/21/83	42.37	876.73	11/30/83	42.50	876.60
08/05/83	41.72	877.38	09/13/83	42.19	876.91	10/22/83	42.38	876.72	11/30/83	42.56	876.54
08/06/83	41.77	877.33	09/14/83	42.15	876.95	10/22/83	42.35	876.75	12/01/83	42.56	876.54
08/06/83	41.74	877.36	09/14/83	42.20	876.90	10/23/83	42.35	876.75	12/01/83	42.52	876.58
08/07/83	41.72	877.38	09/15/83	42.20	876.90	10/23/83	42.31	876.79	12/02/83	42.55	876.55
08/07/83	41.75	877.35	09/15/83	42.14	876.96	10/24/83	42.34	876.76	12/02/83	42.52	876.58
08/08/83	41.75	877.35	09/15/83	42.08	877.02	10/24/83	42.40	876.70	12/03/83	42.47	876.63
08/08/83	42.00	877.10	09/16/83	42.09	877.01	10/25/83	42.36	876.74	12/03/83	42.55	876.55
08/09/83	41.89	877.21	09/16/83	42.13	876.97	10/25/83	42.41	876.69	12/04/83	42.48	876.62
08/09/83	41.77	877.33	09/17/83	42.04	877.06	10/26/83	42.40	876.70	12/04/83	42.55	876.55
08/10/83	41.76	877.34	09/17/83	42.09	877.01	10/26/83	42.39	876.71	12/05/83	42.57	876.53
08/10/83	41.94	877.16	09/18/83	42.05	877.05	10/27/83	42.39	876.71	12/05/83	42.55	876.55
08/11/83	41.87	877.23	09/18/83	42.11	876.99	10/27/83	42.35	876.75	12/06/83	42.53	876.57
08/11/83	42.04	877.06	09/19/83	42.15	876.95	10/28/83	42.53	876.57	12/06/83	42.57	876.53
08/12/83	41.87	877.23	09/19/83	42.11	876.99	10/28/83	42.38	876.72	12/07/83	42.53	876.57
08/12/83	41.83	877.27	09/20/83	42.17	876.93	10/29/83	42.55	876.55	12/07/83	42.56	876.54
08/13/83	41.83	877.27	09/20/83	42.15	876.95	10/29/83	42.53	876.57	12/08/83	42.61	876.49
08/13/83	42.05	877.05	09/21/83	42.18	876.92	10/30/83	42.52	876.58	12/08/83	42.56	876.54
08/14/83	41.90	877.20	09/21/83	42.16	876.94	10/30/83	42.55	876.55	12/09/83	42.62	876.48
08/14/83	42.02	877.08	09/22/83	42.22	876.88	10/31/83	42.53	876.57	12/09/83	42.60	876.50
08/15/83	41.89	877.21	09/22/83	42.18	876.92	10/31/83	42.55	876.55	12/10/83	42.59	876.51
08/15/83	41.90	877.20	09/23/83	42.22	876.88	11/01/83	42.59	876.51	12/10/83	42.61	876.49
08/16/83	41.86	877.24	09/23/83	42.17	876.93	11/01/83	42.55	876.55	12/11/83	42.59	876.51
08/16/83	41.90	877.20	09/24/83	42.32	876.78	11/02/83	42.63	876.47	12/11/83	42.61	876.49
08/17/83	41.87	877.23	09/24/83	42.15	876.95	11/02/83	42.59	876.51	12/12/83	42.55	876.55
08/17/83	41.89	877.21	09/25/83	42.23	876.87	11/03/83	42.63	876.47	12/12/83	42.61	876.49
08/18/83	41.86	877.24	09/25/83	42.20	876.90	11/03/83	42.60	876.50	12/13/83	42.55	876.55
08/18/83	41.89	877.21	09/26/83	42.22	876.88	11/04/83	42.61	876.49	12/13/83	42.52	876.58
08/18/83	42.87	876.23	09/26/83	42.20	876.90	11/04/83	42.52	876.58	12/14/83	42.51	876.59
08/19/83	41.87	877.23	09/27/83	42.17	876.93	11/05/83	42.52	876.58	12/14/83	42.49	876.61
08/19/83	41.99	877.11	09/27/83	42.20	876.90	11/05/83	42.48	876.62	12/15/83	42.61	876.49
08/20/83	41.91	877.19	09/28/83	42.28	876.82	11/06/83	42.47	876.63	12/15/83	42.51	876.59
08/20/83	41.96	877.14	09/28/83	42.17	876.93	11/06/83	42.49	876.61	12/15/83	42.60	876.50
08/21/83	41.90	877.20	09/29/83	42.31	876.79	11/07/83	42.44	876.66	12/16/83	42.60	876.50
08/21/83	41.95	877.15	09/29/83	42.28	876.82	11/07/83	42.53	876.57	12/16/83	42.67	876.43
08/22/83	41.99	877.11	09/30/83	42.19	876.91	11/08/83	42.63	876.47	12/17/83	42.67	876.43
08/22/83	41.95	877.15	09/30/83	42.28	876.82	11/08/83	42.54	876.56	12/17/83	42.71	876.39
08/23/83	41.98	877.12	10/01/83	42.18	876.92	11/09/83	42.63	876.47	12/18/83	42.70	876.40
08/23/83	41.97	877.13	10/01/83	42.21	876.89	11/09/83	42.61	876.49	12/18/83	42.73	876.37
08/24/83	42.08	877.02	10/02/83	42.20	876.90	11/10/83	42.61	876.49	12/19/83	42.73	876.37
08/24/83	41.97	877.13	10/02/83	42.15	876.95	11/10/83	42.59	876.51	12/19/83	42.72	876.38
08/25/83	42.16	876.94	10/03/83	42.16	876.94	11/11/83	42.60	876.50	12/20/83	42.73	876.37
08/25/83	41.98	877.12	10/03/83	42.20	876.90	11/11/83	42.57	876.53	12/20/83	42.69	876.41
08/26/83	42.01	877.09	10/04/83	42.21	876.89	11/12/83	42.48	876.62	12/21/83	42.63	876.47
08/26/83	42.19	876.91	10/04/83	42.18	876.92	11/12/83	42.56	876.54	12/21/83	42.69	876.41
08/27/83	42.02	877.08	10/05/83	42.26	876.84	11/13/83	42.47	876.63	12/22/83	42.63	876.47
08/27/83	42.04	877.06	10/05/83	42.18	876.92	11/13/83	42.42	876.68	12/22/83	42.67	876.43
08/28/83	42.02	877.08	10/06/83	42.25	876.85	11/14/83	42.50	876.60	12/23/83	42.71	876.39
08/28/83	42.00	877.10	10/06/83	42.28	876.82	11/14/83	42.42	876.68	12/23/83	42.67	876.43
08/29/83	41.98	877.12	10/06/83	42.24	876.86	11/15/83	42.55	876.55	12/24/83	42.74	876.36
08/29/83	41.97	877.13	10/07/83	42.30	876.80	11/15/83	42.51	876.59	12/24/83	42.68	876.42
08/29/83	42.02	877.08	10/07/83	42.21	876.89	11/16/83	42.55	876.55	12/25/83	42.68	876.42
08/30/83	41.98	877.12	10/08/83	42.33	876.77	11/16/83	42.51	876.59	12/25/83	42.61	876.49
08/30/83	42.03	877.07	10/08/83	42.30	876.80	11/17/83	42.50	876.60	12/26/83	42.57	876.53
08/31/83	42.03	877.07	10/09/83	42.28	876.82	11/17/83	42.45	876.65	12/26/83	42.61	876.49
08/31/83	42.05	877.05	10/09/83	42.34	876.76	11/18/83	42.44	876.66	12/27/83	42.59	876.51
09/01/83	42.15	876.95	10/10/83	42.22	876.88	11/18/83	42.47	876.63	12/27/83	42.57	876.53
09/01/83	42.01	877.09	10/10/83	42.28	876.82	11/19/83	42.47	876.63	12/28/83	42.59	876.51
09/02/83	42.21	876.89	10/11/83	42.23	876.87	11/19/83	42.36	876.74	12/28/83	42.66	876.44
09/02/83	42.04	877.06	10/11/83	42.27	876.83	11/20/83	42.37	876.73	12/29/83	42.66	876.44
09/03/83	42.27	876.83	10/12/83	42.27	876.83	11/20/83	42.31	876.79	12/29/83	42.69	876.41
09/03/83	42.05	877.05	10/12/83	42.31	876.79	11/21/83	42.48	876.62	12/30/83	42.66	876.44
09/04/83	42.03	877.07	10/12/83	42.28	876.82	11/21/83	42.37	876.73	12/30/83	42.60	876.50

137-049-27BBC **(Continued)** MP Elev (msl,ft)=919.1

Horace Aquifer SI (ft.)=249-300

Date	Depth to Water (ft)	WL Elev (msl, ft)
12/31/83	42.63	876.47
12/31/83	42.70	876.40
01/01/84	42.68	876.42
01/01/84	42.71	876.39
01/02/84	42.62	876.48
01/02/84	42.71	876.39
01/03/84	42.63	876.47
01/03/84	42.59	876.51
01/04/84	42.65	876.45
01/04/84	42.60	876.50
01/05/84	42.63	876.47
01/05/84	42.57	876.53
01/05/84	42.58	876.52
01/06/84	42.64	876.46
01/06/84	42.63	876.47
01/07/84	42.71	876.39
01/07/84	42.64	876.46
01/08/84	42.72	876.38
01/08/84	42.73	876.37
01/09/84	42.73	876.37
01/09/84	42.82	876.28
01/10/84	42.82	876.28
01/10/84	42.76	876.34
01/11/84	42.74	876.36
01/11/84	42.76	876.34
01/12/84	42.79	876.31
01/12/84	42.76	876.34
01/13/84	42.79	876.31
01/13/84	42.87	876.23
01/14/84	42.87	876.23
01/14/84	42.90	876.20
01/15/84	42.73	876.37
01/15/84	42.88	876.22
01/16/84	42.72	876.38
01/16/84	42.79	876.31
01/17/84	42.78	876.32
01/17/84	42.83	876.27
01/18/84	42.78	876.32
01/18/84	42.83	876.27
01/19/84	42.78	876.32
01/19/84	42.86	876.24
01/20/84	42.80	876.30
01/20/84	42.88	876.22
01/21/84	42.77	876.33
01/21/84	42.79	876.31
01/22/84	42.76	876.34
01/22/84	42.79	876.31
01/23/84	42.76	876.34
01/23/84	42.70	876.40
01/24/84	42.74	876.36
01/24/84	42.66	876.44
01/25/84	42.72	876.38
01/25/84	42.74	876.36
01/26/84	42.82	876.28
01/26/84	42.72	876.38
01/27/84	42.81	876.29
01/27/84	42.67	876.43
01/28/84	42.73	876.37
01/28/84	42.66	876.44
01/29/84	42.70	876.40
01/29/84	42.79	876.31
01/30/84	42.80	876.30
01/30/84	42.75	876.35
01/31/84	42.73	876.37
01/31/84	42.76	876.34
02/01/84	42.71	876.39
02/01/84	42.74	876.36
02/02/84	42.71	876.39
02/02/84	42.69	876.41
02/03/84	42.77	876.33
02/03/84	42.68	876.42
02/04/84	42.83	876.27
02/04/84	42.74	876.36
02/05/84	42.83	876.27
02/05/84	42.87	876.23
02/06/84	42.84	876.26
02/06/84	42.87	876.23
02/07/84	42.90	876.20
02/07/84	42.87	876.23
02/08/84	42.90	876.20
02/08/84	42.85	876.25
02/09/84	42.81	876.29
02/09/84	42.84	876.26
02/10/84	42.81	876.29
02/10/84	42.80	876.30
02/11/84	42.81	876.29
02/11/84	42.84	876.26
02/12/84	42.83	876.27
02/12/84	42.77	876.33
02/13/84	42.79	876.31
02/13/84	42.76	876.34
02/13/84	42.77	876.33
02/14/84	42.79	876.31
02/14/84	42.86	876.24
02/15/84	42.84	876.26
02/15/84	42.86	876.24
02/16/84	42.81	876.29
02/16/84	42.85	876.25
02/17/84	42.82	876.28
02/17/84	42.86	876.24
02/18/84	42.83	876.27
02/18/84	42.87	876.23
02/19/84	42.85	876.25
02/19/84	42.87	876.23
02/20/84	42.85	876.25
02/20/84	42.83	876.27
02/21/84	42.78	876.32
02/21/84	42.83	876.27
02/22/84	42.77	876.33
02/22/84	42.78	876.32
02/23/84	42.78	876.32
02/23/84	42.84	876.26
02/24/84	42.86	876.24
02/24/84	42.84	876.26
02/25/84	42.90	876.20
02/25/84	42.85	876.25
02/26/84	42.90	876.20
02/26/84	42.93	876.17
02/27/84	42.93	876.17
02/27/84	42.96	876.14
02/28/84	42.95	876.15
02/28/84	42.96	876.14
02/29/84	42.95	876.15
02/29/84	42.88	876.22
03/01/84	42.92	876.18
03/01/84	42.86	876.24
03/02/84	42.93	876.17
03/02/84	42.92	876.18
03/03/84	42.93	876.17
03/03/84	42.92	876.18
03/04/84	42.93	876.17
03/04/84	42.88	876.22
03/05/84	42.93	876.17
03/05/84	42.90	876.20
03/06/84	42.93	876.17
03/06/84	42.95	876.15
03/07/84	42.97	876.13
03/07/84	42.91	876.19
03/08/84	43.01	876.09
03/08/84	42.98	876.12
03/09/84	42.99	876.11
03/09/84	43.02	876.08
03/10/84	43.01	876.09
03/10/84	42.91	876.19
03/11/84	43.03	876.07
03/11/84	43.01	876.09
03/12/84	43.01	876.09
03/12/84	42.97	876.13
03/13/84	42.98	876.12
03/13/84	42.95	876.15
03/14/84	42.97	876.13
03/14/84	42.89	876.21
03/15/84	43.06	876.04
03/15/84	42.93	876.17
03/16/84	43.07	876.03
03/16/84	43.05	876.05
03/17/84	43.06	876.04
03/17/84	43.03	876.07
03/18/84	43.04	876.06
03/18/84	43.06	876.04
03/19/84	43.04	876.06
03/19/84	42.98	876.12
03/20/84	42.96	876.14
03/20/84	42.98	876.12
03/21/84	42.98	876.12
03/21/84	42.97	876.13
03/22/84	43.04	876.06
03/22/84	43.03	876.07
03/22/84	42.98	876.12
03/23/84	43.05	876.05
03/23/84	43.03	876.07
03/24/84	43.02	876.08
03/24/84	42.99	876.11
03/25/84	42.99	876.11
03/25/84	42.93	876.17
03/26/84	42.80	876.30
03/26/84	42.92	876.18
03/27/84	42.68	876.42
03/27/84	42.79	876.31
03/28/84	42.65	876.45
03/28/84	42.67	876.43
03/29/84	42.74	876.36
03/29/84	42.67	876.43
03/30/84	42.82	876.28
03/30/84	42.74	876.36
03/31/84	42.83	876.27
03/31/84	42.91	876.19
04/01/84	42.91	876.19
04/01/84	42.98	876.12
04/02/84	43.06	876.04
04/02/84	42.99	876.11
04/03/84	43.07	876.03
04/03/84	43.14	875.96
04/04/84	43.14	875.96
04/04/84	43.19	875.91
04/05/84	43.21	875.89
04/05/84	43.19	875.91
04/06/84	43.21	875.89
04/06/84	43.20	875.90
04/07/84	43.23	875.87
04/07/84	43.21	875.89
04/08/84	43.23	875.87
04/08/84	43.24	875.86
04/09/84	43.24	875.86
04/09/84	43.23	875.87
04/10/84	43.20	875.90
04/10/84	43.23	875.87
04/11/84	43.13	875.97
04/11/84	43.18	875.92
04/11/84	43.16	875.94
04/12/84	43.13	875.97
04/12/84	43.08	876.02
04/13/84	43.17	875.93
04/13/84	43.09	876.01
04/14/84	43.17	875.93
04/14/84	43.24	875.86
04/15/84	43.24	875.86
04/15/84	43.27	875.83
04/16/84	43.27	875.83
04/16/84	43.25	875.85
04/17/84	43.27	875.83
04/17/84	43.32	875.78
04/18/84	43.33	875.77
04/18/84	43.32	875.78
04/19/84	43.33	875.77
04/19/84	43.34	875.76
04/20/84	43.34	875.76
04/20/84	43.42	875.68
04/21/84	43.39	875.71
04/21/84	43.42	875.68
04/22/84	43.32	875.78
04/22/84	43.39	875.71
04/23/84	43.32	875.78
04/23/84	43.29	875.81
04/24/84	43.31	875.79
04/24/84	43.27	875.83
04/25/84	43.32	875.78
04/25/84	43.29	875.81
04/26/84	43.30	875.80
04/26/84	43.21	875.89
04/27/84	43.21	875.89
04/27/84	43.13	875.97
04/28/84	43.13	875.97
04/28/84	43.32	875.78
04/29/84	43.35	875.75
04/29/84	43.31	875.79
04/30/84	43.35	875.75
04/30/84	43.30	875.80
05/01/84	43.38	875.72
05/01/84	43.35	875.75
05/02/84	43.36	875.74
05/02/84	43.34	875.76
05/03/84	43.34	875.76
05/03/84	43.32	875.78
05/04/84	43.30	875.80
05/04/84	43.32	875.78
05/05/84	43.30	875.80
05/05/84	43.34	875.76
05/06/84	43.34	875.76
05/06/84	43.32	875.78
05/07/84	43.34	875.76
05/07/84	43.42	875.68
05/08/84	43.42	875.68
05/08/84	43.47	875.63
05/09/84	43.47	875.63
05/09/84	43.50	875.60
05/10/84	43.49	875.61
05/10/84	43.42	875.68
05/11/84	43.48	875.62
05/11/84	43.43	875.67
05/12/84	43.50	875.60
05/12/84	43.45	875.65
05/13/84	43.45	875.65
05/13/84	43.54	875.56
05/14/84	43.57	875.53
05/14/84	43.54	875.56
05/15/84	43.54	875.56
05/15/84	43.57	875.53
05/16/84	43.54	875.56
05/16/84	43.50	875.60
05/16/84	44.55	874.55
05/17/84	43.76	875.34
05/17/84	43.49	875.61
05/18/84	43.89	875.21
05/18/84	43.69	875.41
05/19/84	43.66	875.44
05/19/84	43.74	875.36
05/20/84	43.68	875.42
05/20/84	43.58	875.52
05/21/84	43.55	875.55
05/21/84	43.59	875.51
05/22/84	43.55	875.55
05/22/84	43.63	875.47
05/23/84	43.58	875.52
05/23/84	43.65	875.45
05/24/84	43.60	875.50
05/24/84	43.56	875.54
05/25/84	43.60	875.50
05/25/84	43.72	875.38
05/26/84	43.76	875.34
05/26/84	43.68	875.42
05/27/84	43.78	875.32
05/27/84	43.71	875.39
05/28/84	43.99	875.11
05/28/84	43.78	875.32
05/29/84	43.99	875.11
05/29/84	43.85	875.25
05/30/84	43.87	875.23
05/30/84	43.76	875.34
05/31/84	43.76	875.34
05/31/84	43.71	875.39
06/01/84	43.90	875.20
06/01/84	43.72	875.38
06/02/84	43.82	875.28
06/02/84	44.02	875.08
06/03/84	43.82	875.28
06/03/84	43.85	875.25
06/04/84	43.82	875.28
06/04/84	43.69	875.41

137-049-27BBC **(Continued)** MP Elev (msl,ft)=919.1

Horace Aquifer SI (ft.)=249-300

Date	Depth to Water (ft)	WL Elev (msl. ft)	Date	Depth to Water (ft)	WL Elev (msl. ft)	Date	Depth to Water (ft)	WL Elev (msl. ft)	Date	Depth to Water (ft)	WL Elev (msl. ft)
06/05/84	43.73	875.37	07/14/84	44.27	874.83	08/22/84	45.52	873.58	09/30/84	45.71	873.39
06/05/84	43.69	875.41	07/14/84	44.55	874.55	08/22/84	45.31	873.79	09/30/84	45.71	873.39
06/06/84	43.62	875.48	07/15/84	44.38	874.72	08/23/84	45.50	873.60	10/01/84	45.65	873.45
06/06/84	43.72	875.38	07/15/84	44.56	874.54	08/23/84	45.42	873.68	10/01/84	45.71	873.39
06/07/84	43.64	875.46	07/16/84	44.37	874.73	08/24/84	45.38	873.72	10/02/84	45.63	873.47
06/07/84	43.52	875.58	07/16/84	44.46	874.64	08/24/84	45.41	873.69	10/02/84	45.65	873.45
06/08/84	43.55	875.55	07/17/84	44.38	874.72	08/25/84	45.39	873.71	10/03/84	45.67	873.43
06/08/84	43.47	875.63	07/17/84	44.42	874.68	08/25/84	45.63	873.47	10/03/84	45.70	873.40
06/09/84	43.55	875.55	07/18/84	44.41	874.69	08/26/84	45.45	873.65	10/04/84	45.68	873.42
06/09/84	43.59	875.51	07/18/84	44.42	874.68	08/26/84	45.41	873.69	10/04/84	45.67	873.43
06/10/84	43.72	875.38	07/19/84	44.49	874.61	08/27/84	45.58	873.52	10/05/84	45.68	873.42
06/10/84	43.60	875.50	07/19/84	44.41	874.69	08/27/84	45.42	873.68	10/05/84	45.71	873.39
06/11/84	43.70	875.40	07/20/84	44.64	874.46	08/28/84	45.64	873.46	10/06/84	45.67	873.43
06/11/84	43.75	875.35	07/20/84	44.49	874.61	08/28/84	45.50	873.60	10/06/84	45.71	873.39
06/12/84	43.75	875.35	07/21/84	44.50	874.60	08/29/84	45.55	873.55	10/07/84	45.66	873.44
06/12/84	43.70	875.40	07/21/84	44.53	874.57	08/29/84	45.52	873.58	10/07/84	45.68	873.42
06/13/84	43.81	875.29	07/22/84	44.50	874.60	08/30/84	45.51	873.59	10/08/84	45.69	873.41
06/13/84	43.75	875.35	07/22/84	44.67	874.43	08/30/84	45.56	873.54	10/08/84	45.73	873.37
06/14/84	43.80	875.30	07/23/84	44.61	874.49	08/30/84	45.56	873.54	10/09/84	45.73	873.37
06/14/84	43.82	875.28	07/23/84	44.84	874.26	08/31/84	45.51	873.59	10/09/84	45.74	873.36
06/14/84	43.82	875.28	07/24/84	44.70	874.40	08/31/84	45.56	873.54	10/10/84	45.73	873.37
06/15/84	43.79	875.31	07/24/84	44.72	874.38	09/01/84	45.49	873.61	10/10/84	45.78	873.32
06/15/84	43.83	875.27	07/25/84	44.69	874.41	09/01/84	45.52	873.58	10/10/84	45.74	873.36
06/16/84	43.84	875.26	07/25/84	44.72	874.38	09/02/84	45.54	873.56	10/11/84	45.70	873.40
06/16/84	43.82	875.28	07/26/84	44.71	874.39	09/02/84	45.50	873.60	10/11/84	45.73	873.37
06/17/84	43.82	875.28	07/26/84	44.71	874.39	09/03/84	45.74	873.36	10/12/84	45.72	873.38
06/17/84	43.78	875.32	07/26/84	44.69	874.41	09/03/84	45.50	873.60	10/12/84	45.67	873.43
06/18/84	43.84	875.26	07/27/84	44.92	874.18	09/04/84	45.67	873.43	10/13/84	45.68	873.42
06/18/84	43.79	875.31	07/27/84	44.68	874.42	09/04/84	45.79	873.31	10/13/84	45.47	873.63
06/19/84	43.87	875.23	07/28/84	45.00	874.10	09/05/84	45.68	873.42	10/14/84	45.40	873.70
06/19/84	43.84	875.26	07/28/84	44.79	874.31	09/05/84	45.61	873.49	10/14/84	45.44	873.66
06/20/84	43.87	875.23	07/29/84	44.76	874.34	09/06/84	45.59	873.51	10/15/84	45.39	873.71
06/20/84	43.90	875.20	07/29/84	44.84	874.26	09/06/84	45.46	873.64	10/15/84	45.24	873.86
06/21/84	43.88	875.22	07/30/84	44.71	874.39	09/07/84	45.44	873.66	10/16/84	45.29	873.81
06/21/84	43.89	875.21	07/30/84	44.75	874.35	09/07/84	45.55	873.55	10/16/84	45.35	873.75
06/22/84	43.84	875.26	07/31/84	44.71	874.39	09/08/84	45.48	873.62	10/17/84	45.40	873.70
06/22/84	43.91	875.19	07/31/84	44.80	874.30	09/08/84	45.51	873.59	10/17/84	45.33	873.77
06/22/84	43.89	875.21	08/01/84	44.82	874.28	09/09/84	45.52	873.58	10/18/84	45.40	873.70
06/23/84	43.88	875.22	08/01/84	44.78	874.32	09/09/84	45.50	873.60	10/18/84	45.28	873.82
06/23/84	43.85	875.25	08/02/84	44.86	874.24	09/10/84	45.70	873.40	10/19/84	45.25	873.85
06/24/84	43.88	875.22	08/02/84	45.04	874.06	09/10/84	45.52	873.58	10/19/84	45.19	873.91
06/24/84	43.90	875.20	08/03/84	44.94	874.16	09/11/84	45.62	873.48	10/20/84	45.28	873.82
06/25/84	43.88	875.22	08/03/84	45.15	873.95	09/11/84	45.58	873.52	10/20/84	45.20	873.90
06/25/84	43.91	875.19	08/04/84	44.97	874.13	09/12/84	45.55	873.55	10/21/84	45.28	873.82
06/26/84	43.91	875.19	08/04/84	45.06	874.04	09/12/84	45.50	873.60	10/21/84	45.34	873.76
06/26/84	43.95	875.15	08/05/84	44.88	874.22	09/12/84	45.57	873.53	10/22/84	45.35	873.75
06/27/84	44.00	875.10	08/05/84	44.91	874.19	09/13/84	45.61	873.49	10/22/84	45.40	873.70
06/27/84	43.95	875.15	08/06/84	44.99	874.11	09/13/84	45.55	873.55	10/23/84	45.40	873.70
06/28/84	43.98	875.12	08/06/84	44.89	874.21	09/14/84	45.65	873.45	10/23/84	45.42	873.68
06/28/84	44.02	875.08	08/07/84	44.90	874.20	09/14/84	45.62	873.48	10/24/84	45.36	873.74
06/29/84	44.02	875.08	08/07/84	44.92	874.18	09/15/84	45.65	873.45	10/24/84	45.36	873.74
06/29/84	44.06	875.04	08/08/84	44.94	874.16	09/15/84	45.68	873.42	10/24/84	45.40	873.70
06/30/84	44.04	875.06	08/08/84	44.93	874.17	09/16/84	45.65	873.45	10/25/84	45.34	873.76
06/30/84	44.06	875.04	08/09/84	44.97	874.13	09/16/84	45.77	873.33	10/25/84	45.41	873.69
07/01/84	44.04	875.06	08/09/84	44.92	874.18	09/17/84	45.78	873.32	10/26/84	45.27	873.83
07/01/84	44.05	875.05	08/09/84	44.98	874.12	09/17/84	45.63	873.47	10/26/84	45.33	873.77
07/02/84	44.20	874.90	08/10/84	45.24	873.86	09/18/84	45.64	873.46	10/27/84	45.35	873.75
07/02/84	44.02	875.08	08/10/84	44.99	874.11	09/18/84	45.67	873.43	10/27/84	45.23	873.87
07/03/84	44.22	874.88	08/11/84	45.10	874.00	09/19/84	45.61	873.49	10/28/84	45.36	873.74
07/03/84	44.11	874.99	08/11/84	45.07	874.03	09/19/84	45.64	873.46	10/28/84	45.40	873.70
07/04/84	44.12	874.98	08/12/84	45.11	873.99	09/20/84	45.64	873.46	10/29/84	45.37	873.73
07/04/84	44.13	874.97	08/12/84	45.36	873.74	09/20/84	45.68	873.42	10/29/84	45.41	873.69
07/05/84	44.12	874.98	08/13/84	45.35	873.75	09/21/84	45.60	873.50	10/30/84	45.42	873.68
07/05/84	44.16	874.94	08/13/84	45.19	873.91	09/21/84	45.53	873.57	10/30/84	45.47	873.63
07/06/84	44.33	874.77	08/14/84	45.26	873.84	09/22/84	45.76	873.34	10/31/84	45.38	873.72
07/06/84	44.16	874.94	08/14/84	45.23	873.87	09/22/84	45.54	873.56	10/31/84	45.47	873.63
07/07/84	44.17	874.93	08/15/84	45.25	873.85	09/23/84	45.69	873.41	11/01/84	45.43	873.67
07/07/84	44.23	874.87	08/15/84	45.34	873.76	09/23/84	45.72	873.38	11/01/84	45.52	873.58
07/08/84	44.28	874.82	08/16/84	45.31	873.79	09/24/84	45.62	873.48	11/02/84	45.53	873.57
07/08/84	44.15	874.95	08/16/84	45.50	873.60	09/24/84	45.68	873.42	11/02/84	45.37	873.73
07/09/84	44.17	874.93	08/17/84	45.35	873.75	09/25/84	45.72	873.38	11/03/84	45.36	873.74
07/09/84	44.31	874.79	08/17/84	45.38	873.72	09/25/84	45.67	873.43	11/03/84	45.30	873.80
07/10/84	44.23	874.87	08/18/84	45.33	873.77	09/26/84	45.72	873.38	11/04/84	45.43	873.67
07/10/84	44.20	874.90	08/18/84	45.39	873.71	09/26/84	45.74	873.36	11/04/84	45.33	873.77
07/11/84	44.22	874.88	08/19/84	45.31	873.79	09/27/84	45.72	873.38	11/05/84	45.43	873.67
07/11/84	44.26	874.84	08/19/84	45.28	873.82	09/27/84	45.75	873.35	11/05/84	45.46	873.64
07/12/84	44.26	874.84	08/20/84	45.25	873.85	09/28/84	45.76	873.34	11/06/84	45.46	873.64
07/12/84	44.29	874.81	08/20/84	45.29	873.81	09/28/84	45.75	873.35	11/06/84	45.42	873.68
07/13/84	44.28	874.82	08/21/84	45.25	873.85	09/29/84	45.75	873.35	11/07/84	45.37	873.73
07/13/84	44.26	874.84	08/21/84	45.30	873.80	09/29/84	45.71	873.39	11/07/84	45.36	873.74

137-049-27BBC **(Continued)** MP Elev (msl,ft)=919.1

Horace Aquifer SI (ft.)=249-300

Date	Depth to Water (ft)	WL Elev (msl, ft)
11/07/84	45.42	873.68
11/08/84	45.39	873.71
11/08/84	45.45	873.65
11/09/84	45.43	873.67
11/09/84	45.49	873.61
11/10/84	45.49	873.61
11/10/84	45.53	873.57
11/11/84	45.51	873.59
11/11/84	45.53	873.57
11/12/84	45.52	873.58
11/12/84	45.52	873.58
11/13/84	45.44	873.66
11/13/84	45.52	873.58
11/14/84	45.43	873.67
11/14/84	45.38	873.72
11/15/84	45.53	873.57
11/15/84	45.42	873.68
11/16/84	45.54	873.56
11/16/84	45.51	873.59
11/17/84	45.58	873.52
11/17/84	45.51	873.59
11/18/84	45.57	873.53
11/18/84	45.60	873.50
11/19/84	45.65	873.45
11/19/84	45.60	873.50
11/20/84	45.65	873.45
11/20/84	45.63	873.47
11/21/84	45.64	873.46
11/21/84	45.58	873.52
11/22/84	45.58	873.52
11/22/84	45.61	873.49
11/23/84	45.61	873.49
11/23/84	45.54	873.56
11/24/84	45.54	873.56
11/24/84	45.48	873.62
11/25/84	45.45	873.65
11/25/84	45.50	873.60
11/26/84	45.43	873.67
11/26/84	45.48	873.62
11/27/84	45.48	873.62
11/27/84	45.50	873.60
11/27/84	45.48	873.62
11/28/84	45.51	873.59
11/28/84	45.49	873.61
11/29/84	45.51	873.59
11/29/84	45.54	873.56
11/30/84	45.57	873.53
11/30/84	45.54	873.56
12/01/84	45.62	873.48
12/01/84	45.57	873.53
12/02/84	45.62	873.48
12/02/84	45.65	873.45
12/03/84	45.65	873.45
12/03/84	45.68	873.42
12/04/84	45.65	873.45
12/04/84	45.68	873.42
12/05/84	45.72	873.38
12/05/84	45.73	873.37
12/05/84	45.61	873.49
12/06/84	45.73	873.37
12/06/84	45.61	873.49
12/07/84	45.61	873.49
12/07/84	45.55	873.55
12/08/84	45.60	873.50
12/08/84	45.58	873.52
12/09/84	45.58	873.52
12/09/84	45.65	873.45
12/10/84	45.55	873.55
12/10/84	45.65	873.45
12/11/84	45.52	873.58
12/11/84	45.60	873.50
12/12/84	45.66	873.44
12/12/84	45.60	873.50
12/13/84	45.73	873.37
12/13/84	45.66	873.44
12/14/84	45.73	873.37
12/14/84	45.69	873.41
12/15/84	45.57	873.53
12/15/84	45.68	873.42
12/16/84	45.65	873.45
12/16/84	45.52	873.58
12/17/84	45.71	873.39
12/17/84	45.65	873.45
12/18/84	45.71	873.39
12/18/84	45.65	873.45
12/19/84	45.59	873.51
12/19/84	45.64	873.46
12/20/84	45.57	873.53
12/20/84	45.64	873.46
12/21/84	45.54	873.56
12/21/84	45.65	873.45
12/22/84	45.66	873.44
12/22/84	45.65	873.45
12/23/84	45.71	873.39
12/23/84	45.65	873.45
12/24/84	45.71	873.39
12/24/84	45.69	873.41
12/25/84	45.78	873.32
12/25/84	45.69	873.41
12/26/84	45.78	873.32
12/26/84	45.71	873.39
12/27/84	45.63	873.47
12/27/84	45.70	873.40
12/28/84	45.62	873.48
12/28/84	45.69	873.41
12/29/84	45.78	873.32
12/29/84	45.70	873.40
12/30/84	45.79	873.31
12/30/84	45.82	873.28
12/31/84	45.82	873.28
12/31/84	45.80	873.30
01/01/85	45.78	873.32
01/01/85	45.80	873.30
01/02/85	45.78	873.32
01/02/85	45.80	873.30
01/03/85	45.75	873.35
01/03/85	45.77	873.33
01/04/85	45.79	873.31
01/04/85	45.75	873.35
01/05/85	45.67	873.43
01/05/85	45.75	873.35
01/06/85	45.72	873.38
01/06/85	45.66	873.44
01/07/85	45.83	873.27
01/07/85	45.72	873.38
01/08/85	45.83	873.27
01/08/85	45.83	873.27
01/09/85	45.81	873.29
01/09/85	45.84	873.26
01/10/85	45.83	873.27
01/10/85	45.90	873.20
01/11/85	45.90	873.20
01/11/85	45.87	873.23
01/12/85	45.71	873.39
01/12/85	45.86	873.24
01/13/85	45.78	873.32
01/13/85	45.68	873.42
01/14/85	45.84	873.26
01/14/85	45.79	873.31
01/15/85	45.78	873.32
01/15/85	45.80	873.30
01/16/85	45.74	873.36
01/16/85	45.78	873.32
01/17/85	45.66	873.44
01/17/85	45.73	873.37
01/18/85	45.80	873.30
01/18/85	45.73	873.37
01/19/85	45.87	873.23
01/19/85	45.80	873.30
01/20/85	45.85	873.25
01/20/85	45.88	873.22
01/21/85	45.89	873.21
01/21/85	45.87	873.23
01/22/85	45.79	873.31
01/22/85	45.88	873.22
01/23/85	45.73	873.37
01/23/85	45.79	873.31
01/24/85	45.71	873.39
01/24/85	45.85	873.25
01/25/85	45.87	873.23
01/25/85	45.81	873.29
01/26/85	45.80	873.30
01/26/85	45.78	873.32
01/27/85	45.80	873.30
01/27/85	45.84	873.26
01/28/85	45.79	873.31
01/28/85	45.83	873.27
01/29/85	45.88	873.22
01/29/85	45.79	873.31
01/30/85	45.89	873.21
01/30/85	45.86	873.24
01/31/85	45.87	873.23
01/31/85	45.86	873.24
02/01/85	45.88	873.22
02/01/85	45.87	873.23
02/02/85	45.86	873.24
02/02/85	45.90	873.20
02/03/85	45.90	873.20
02/03/85	45.97	873.13
02/04/85	45.96	873.14
02/04/85	45.87	873.23
02/05/85	45.87	873.23
02/05/85	45.84	873.26
02/06/85	45.86	873.24
02/06/85	45.95	873.15
02/07/85	45.97	873.13
02/07/85	45.95	873.15
02/08/85	45.95	873.15
02/08/85	45.88	873.22
02/09/85	45.93	873.17
02/09/85	45.88	873.22
02/10/85	45.97	873.13
02/10/85	45.93	873.17
02/11/85	45.97	873.13
02/11/85	45.96	873.14
02/12/85	45.96	873.14
02/12/85	45.91	873.19
02/13/85	45.96	873.14
02/13/85	45.92	873.18
02/14/85	45.97	873.13
02/14/85	45.91	873.19
02/15/85	45.91	873.19
02/15/85	45.82	873.28
02/16/85	45.83	873.27
02/16/85	45.89	873.21
02/17/85	45.90	873.20
02/17/85	45.89	873.21
02/18/85	45.96	873.14
02/18/85	45.91	873.19
02/19/85	45.96	873.14
02/19/85	45.90	873.20
02/20/85	45.84	873.26
02/20/85	45.90	873.20
02/21/85	45.90	873.20
02/21/85	45.86	873.24
02/22/85	45.92	873.18
02/22/85	45.90	873.20
02/23/85	45.97	873.13
02/23/85	45.93	873.17
02/24/85	45.97	873.13
02/24/85	45.91	873.19
02/25/85	45.96	873.14
02/25/85	45.90	873.20
02/26/85	46.02	873.08
02/26/85	45.97	873.13
02/27/85	46.02	873.08
02/27/85	45.96	873.14
02/28/85	45.90	873.20
02/28/85	45.96	873.14
03/01/85	45.90	873.20
03/01/85	46.01	873.09
03/02/85	46.01	873.09
03/02/85	46.05	873.05
03/03/85	46.05	873.05
03/03/85	45.90	873.20
03/04/85	45.79	873.31
03/04/85	45.90	873.20
03/05/85	45.90	873.20
03/05/85	45.99	873.11
03/06/85	45.99	873.11
03/06/85	45.88	873.22
03/07/85	45.89	873.21
03/07/85	45.91	873.19
03/08/85	45.91	873.19
03/08/85	45.96	873.14
03/09/85	45.93	873.17
03/09/85	45.95	873.15
03/10/85	45.93	873.17
03/10/85	45.89	873.21
03/11/85	45.89	873.21
03/11/85	45.94	873.16
03/12/85	45.89	873.21
03/12/85	45.94	873.16
03/13/85	45.90	873.20
03/13/85	45.88	873.22
03/13/85	45.90	873.20
03/14/85	45.90	873.20
03/14/85	45.94	873.16
03/15/85	45.88	873.22
03/15/85	45.93	873.17
03/16/85	45.91	873.19
03/16/85	45.90	873.20
03/17/85	45.91	873.19
03/17/85	45.90	873.20
03/18/85	45.89	873.21
03/18/85	45.86	873.24
03/19/85	45.95	873.15
03/19/85	45.88	873.22
03/20/85	45.97	873.13
03/20/85	45.95	873.15
03/21/85	45.93	873.17
03/21/85	45.96	873.14
03/22/85	45.97	873.13
03/22/85	45.96	873.14
03/23/85	45.96	873.14
03/23/85	45.97	873.13
03/24/85	45.97	873.13
03/24/85	46.02	873.08
03/25/85	46.03	873.07
03/25/85	45.98	873.12
03/26/85	45.97	873.13
03/26/85	45.92	873.18
03/27/85	45.92	873.18
03/27/85	45.95	873.15
03/28/85	45.89	873.21
03/28/85	45.92	873.18
03/29/85	46.01	873.09
03/29/85	45.89	873.21
03/30/85	46.02	873.08
03/30/85	45.99	873.11
03/31/85	45.98	873.12
03/31/85	45.94	873.16
04/01/85	45.96	873.14
04/01/85	45.98	873.12
04/02/85	45.95	873.15
04/02/85	45.90	873.20
04/03/85	45.94	873.16
04/03/85	45.91	873.19
04/04/85	45.94	873.16
04/04/85	45.92	873.18
04/05/85	45.93	873.17
04/05/85	45.95	873.15
04/06/85	45.95	873.15
04/06/85	46.01	873.09
04/07/85	46.02	873.08
04/07/85	46.09	873.01
04/08/85	46.13	872.97
04/08/85	46.09	873.01
04/09/85	46.10	873.00
04/09/85	46.02	873.08
04/10/85	46.05	873.05
04/10/85	46.01	873.09
04/11/85	46.04	873.06
04/11/85	46.06	873.04
04/12/85	46.04	873.06
04/12/85	46.06	873.04
04/13/85	46.05	873.05
04/13/85	46.06	873.04
04/14/85	46.00	873.10

137-049-27BBC **(Continued)** MP Elev (msl,ft)=919.1

Horace Aquifer SI (ft.)=249-300

Date	Depth to Water (ft)	WL Elev (msl. ft)
04/14/85	46.06	873.04
04/15/85	46.00	873.10
04/15/85	46.06	873.04
04/16/85	46.10	873.00
04/16/85	46.05	873.05
04/17/85	45.97	873.13
04/17/85	46.00	873.10
04/17/85	46.04	873.06
04/18/85	45.96	873.14
04/18/85	46.00	873.10
04/19/85	45.94	873.16
04/19/85	45.98	873.12
04/20/85	46.00	873.10
04/20/85	45.92	873.18
04/21/85	46.01	873.09
04/21/85	45.95	873.15
04/22/85	46.03	873.07
04/22/85	45.99	873.11
04/23/85	46.02	873.08
04/23/85	46.05	873.05
04/24/85	46.06	873.04
04/24/85	46.07	873.03
04/25/85	46.10	873.00
04/25/85	46.06	873.04
04/26/85	46.15	872.95
04/26/85	46.11	872.99
04/27/85	46.15	872.95
04/27/85	46.12	872.98
04/28/85	46.12	872.98
04/28/85	46.14	872.96
04/29/85	46.21	872.89
04/29/85	46.12	872.98
04/30/85	46.31	872.79
04/30/85	46.22	872.88
05/01/85	46.35	872.75
05/01/85	46.32	872.78
05/02/85	46.34	872.76
05/02/85	46.28	872.82
05/03/85	46.27	872.83
05/03/85	46.18	872.92
05/04/85	46.12	872.98
05/04/85	46.17	872.93
05/05/85	46.20	872.90
05/05/85	46.16	872.94
05/05/85	46.17	872.93
05/06/85	46.19	872.91
05/06/85	46.25	872.85
05/07/85	46.29	872.81
05/07/85	46.25	872.85
05/08/85	46.27	872.83
05/08/85	46.20	872.90
05/09/85	46.23	872.87
05/09/85	46.20	872.90
05/10/85	46.33	872.77
05/10/85	46.22	872.88
05/11/85	46.21	872.89
05/11/85	46.12	872.98
05/12/85	46.16	872.94
05/12/85	46.10	873.00
05/13/85	46.20	872.90
05/13/85	46.17	872.93
05/14/85	46.20	872.90
05/14/85	46.19	872.91
05/15/85	46.18	872.92
05/15/85	46.12	872.98
05/16/85	46.15	872.95
05/16/85	46.20	872.90
05/17/85	46.21	872.89
05/17/85	46.18	872.92
05/18/85	46.12	872.98
05/18/85	46.18	872.92
05/19/85	46.18	872.92
05/19/85	46.12	872.98
05/20/85	46.24	872.86
05/20/85	46.18	872.92
05/21/85	46.24	872.86
05/21/85	46.27	872.83
05/22/85	46.37	872.73
05/22/85	46.24	872.86
05/23/85	46.34	872.76
05/23/85	46.30	872.80
05/24/85	46.28	872.82
05/24/85	46.32	872.78
05/25/85	46.24	872.86
05/25/85	46.28	872.82
05/26/85	46.24	872.86
05/26/85	46.28	872.82
05/27/85	46.33	872.77
05/27/85	46.28	872.82
05/28/85	46.32	872.78
05/28/85	46.28	872.82
05/29/85	46.27	872.83
05/29/85	46.22	872.88
05/30/85	46.08	873.02
05/30/85	46.23	872.87
05/31/85	46.16	872.94
05/31/85	46.07	873.03
06/01/85	46.19	872.91
06/01/85	46.14	872.96
06/02/85	46.13	872.97
06/02/85	46.16	872.94
06/03/85	46.15	872.95
06/03/85	46.13	872.97
06/04/85	46.15	872.95
06/04/85	46.13	872.97
06/05/85	46.19	872.91
06/05/85	46.15	872.95
06/06/85	46.19	872.91
06/06/85	46.23	872.87
06/07/85	46.23	872.87
06/07/85	46.27	872.83
06/08/85	46.22	872.88
06/08/85	46.29	872.81
06/08/85	46.26	872.84
06/09/85	46.29	872.81
06/09/85	46.35	872.75
06/10/85	46.35	872.75
06/10/85	46.37	872.73
06/11/85	46.37	872.73
06/11/85	46.31	872.79
06/12/85	46.33	872.77
06/12/85	46.35	872.75
06/13/85	46.32	872.78
06/13/85	46.29	872.81
06/14/85	46.29	872.81
06/14/85	46.27	872.83
06/15/85	46.33	872.77
06/15/85	46.28	872.82
06/16/85	46.30	872.80
06/16/85	46.33	872.77
06/17/85	46.33	872.77
06/17/85	46.30	872.80
06/18/85	46.32	872.78
06/18/85	46.37	872.73
06/19/85	46.33	872.77
06/19/85	46.37	872.73
06/20/85	46.30	872.80
06/20/85	46.33	872.77
06/21/85	46.26	872.84
06/21/85	46.29	872.81
06/22/85	46.27	872.83
06/22/85	46.33	872.77
06/23/85	46.33	872.77
06/23/85	46.39	872.71
06/24/85	46.37	872.73
06/24/85	46.49	872.61
06/25/85	46.37	872.73
06/25/85	46.33	872.77
06/26/85	46.38	872.72
06/26/85	46.40	872.70
06/26/85	46.37	872.73
06/27/85	46.43	872.67
06/27/85	46.40	872.70
06/28/85	46.46	872.64
06/28/85	46.43	872.67
06/29/85	46.46	872.64
06/29/85	46.50	872.60
06/30/85	46.51	872.59
06/30/85	46.49	872.61
07/01/85	46.49	872.61
07/01/85	46.52	872.58
07/02/85	46.55	872.55
07/02/85	46.50	872.60
07/03/85	46.45	872.65
07/03/85	46.50	872.60
07/04/85	46.45	872.65
07/04/85	46.66	872.44
07/05/85	46.72	872.38
07/05/85	46.54	872.56
07/06/85	46.54	872.56
07/06/85	46.58	872.52
07/07/85	46.54	872.56
07/07/85	46.62	872.48
07/08/85	46.63	872.47
07/08/85	46.64	872.46
07/08/85	46.59	872.51
07/09/85	46.61	872.49
07/09/85	46.81	872.29
07/10/85	46.68	872.42
07/10/85	46.83	872.27
07/11/85	46.73	872.37
07/11/85	46.85	872.25
07/12/85	46.72	872.38
07/12/85	46.68	872.42
07/13/85	46.71	872.39
07/13/85	46.66	872.44
07/14/85	46.71	872.39
07/14/85	46.92	872.18
07/15/85	46.81	872.29
07/15/85	46.78	872.32
07/16/85	46.80	872.30
07/16/85	46.82	872.28
07/17/85	46.98	872.12
07/17/85	46.76	872.34
07/18/85	46.75	872.35
07/18/85	46.68	872.42
07/19/85	46.72	872.38
07/19/85	46.68	872.42
07/20/85	46.71	872.39
07/20/85	46.73	872.37
07/21/85	46.71	872.39
07/21/85	46.76	872.34
07/22/85	46.76	872.34
07/22/85	46.78	872.32
07/23/85	46.76	872.34
07/23/85	46.73	872.37
07/24/85	46.77	872.33
07/24/85	46.71	872.39
07/25/85	46.83	872.27
07/25/85	46.77	872.33
07/26/85	46.83	872.27
07/26/85	46.86	872.24
07/27/85	46.82	872.28
07/27/85	46.84	872.26
07/28/85	46.83	872.27
07/28/85	46.89	872.21
07/29/85	46.93	872.17
07/29/85	46.89	872.21
07/30/85	46.91	872.19
07/30/85	46.93	872.17
07/31/85	46.95	872.15
07/31/85	46.92	872.18
08/01/85	46.97	872.13
08/01/85	46.95	872.15
08/02/85	46.93	872.17
08/02/85	46.95	872.15
08/03/85	46.89	872.21
08/03/85	46.93	872.17
08/04/85	46.96	872.14
08/04/85	46.88	872.22
08/05/85	46.90	872.20
08/05/85	46.88	872.22
08/06/85	46.89	872.21
08/06/85	46.93	872.17
08/07/85	46.94	872.16
08/07/85	46.93	872.17
08/08/85	46.94	872.16
08/08/85	46.90	872.20
08/09/85	46.90	872.20
08/09/85	47.15	871.95
08/10/85	47.05	872.05
08/10/85	47.23	871.87
08/11/85	47.03	872.07
08/11/85	47.12	871.98
08/12/85	46.89	872.21
08/12/85	47.02	872.08
08/13/85	46.90	872.20
08/13/85	46.97	872.13
08/14/85	46.97	872.13
08/14/85	47.00	872.10
08/15/85	46.99	872.11
08/15/85	47.00	872.10
08/16/85	46.94	872.16
08/16/85	47.00	872.10
08/17/85	47.01	872.09
08/17/85	47.13	871.97
08/17/85	46.95	872.15
08/18/85	47.06	872.04
08/18/85	47.01	872.09
08/19/85	47.10	872.00
08/19/85	47.06	872.04
08/20/85	47.09	872.01
08/20/85	47.10	872.00
08/21/85	47.07	872.03
08/21/85	47.10	872.00
08/22/85	47.03	872.07
08/22/85	47.05	872.05
08/23/85	47.03	872.07
08/23/85	47.01	872.09
08/24/85	47.07	872.03
08/24/85	47.03	872.07
08/25/85	47.10	872.00
08/25/85	47.07	872.03
08/26/85	47.08	872.02
08/26/85	47.09	872.01
08/27/85	47.09	872.01
08/27/85	47.13	871.97
08/28/85	47.13	871.97
08/28/85	47.08	872.02
08/29/85	47.08	872.02
08/29/85	47.07	872.03
08/30/85	47.05	872.05
08/30/85	47.08	872.02
08/31/85	47.01	872.09
08/31/85	47.05	872.05
09/01/85	47.05	872.05
09/01/85	47.11	871.99
09/02/85	47.11	871.99
09/02/85	47.00	872.10
09/03/85	47.00	872.10
09/03/85	47.01	872.09
09/04/85	47.01	872.09
09/04/85	47.02	872.08
09/05/85	46.87	872.23
09/05/85	47.02	872.08
09/06/85	46.94	872.16
09/06/85	46.87	872.23
09/07/85	46.99	872.11
09/07/85	46.95	872.15
09/08/85	46.96	872.14
09/08/85	47.03	872.07
09/09/85	46.98	872.12
09/09/85	46.96	872.14
09/10/85	47.03	872.07
09/10/85	46.98	872.12
09/11/85	47.06	872.04
09/11/85	47.03	872.07
09/12/85	47.04	872.06
09/12/85	47.07	872.03
09/13/85	47.07	872.03
09/13/85	47.10	872.00
09/14/85	47.10	872.00
09/14/85	47.06	872.04
09/15/85	47.06	872.04
09/15/85	46.99	872.11
09/16/85	47.00	872.10
09/16/85	46.92	872.18
09/17/85	46.94	872.16
09/17/85	46.91	872.19
09/17/85	46.96	872.14

137-049-27BBC **(Continued)** MP Elev (msl,ft)=919.1

Horace Aquifer SI (ft.)=249-300

Date	Depth to Water (ft)	WL Elev (msl, ft)	Date	Depth to Water (ft)	WL Elev (msl, ft)	Date	Depth to Water (ft)	WL Elev (msl, ft)	Date	Depth to Water (ft)	WL Elev (msl, ft)
09/18/85	46.97	872.13	10/26/85	47.09	872.01	12/05/85	47.15	871.95	05/19/86	47.34	871.76
09/18/85	46.98	872.12	10/27/85	47.20	871.90	12/06/85	47.17	871.93	05/19/86	47.36	871.74
09/19/85	46.96	872.14	10/27/85	47.18	871.92	12/06/85	47.15	871.95	05/20/86	47.35	871.75
09/19/85	47.01	872.09	10/28/85	47.12	871.98	12/06/85	47.15	871.95	05/20/86	47.38	871.72
09/20/85	47.08	872.02	10/28/85	47.19	871.91	12/07/85	47.15	871.95	05/21/86	47.43	871.67
09/20/85	47.01	872.09	10/29/85	47.23	871.87				05/21/86	47.37	871.73
09/21/85	47.08	872.02	10/29/85	47.15	871.95	04/13/86	47.37	871.73	05/22/86	47.54	871.56
09/21/85	47.00	872.10	10/30/85	47.23	871.87	04/13/86	47.37	871.73	05/22/86	47.42	871.68
09/22/85	47.01	872.09	10/30/85	47.15	871.95	04/13/86	47.30	871.80	05/22/86	47.52	871.58
09/22/85	46.99	872.11	10/31/85	47.15	871.95	04/14/86	47.30	871.80	05/23/86	47.54	871.56
09/22/85	47.02	872.08	10/31/85	47.09	872.01	04/14/86	47.12	871.98	05/23/86	47.44	871.66
09/23/85	47.03	872.07	11/01/85	47.13	871.97	04/15/86	47.14	871.96	05/24/86	47.45	871.65
09/23/85	47.02	872.08	11/01/85	47.10	872.00	04/15/86	47.10	872.00	05/24/86	47.42	871.68
09/24/85	47.04	872.06	11/02/85	47.16	871.94	04/16/86	47.09	872.01	05/25/86	47.42	871.68
09/24/85	47.02	872.08	11/02/85	47.13	871.97	04/16/86	47.02	872.08	05/25/86	47.44	871.66
09/25/85	47.03	872.07	11/03/85	47.20	871.90	04/17/86	47.05	872.05	05/26/86	47.42	871.68
09/25/85	47.06	872.04	11/03/85	47.17	871.93	04/17/86	47.02	872.08	05/26/86	47.45	871.65
09/26/85	47.01	872.09	11/04/85	47.20	871.90	04/18/86	46.91	872.19	05/27/86	47.45	871.65
09/26/85	47.06	872.04	11/04/85	47.15	871.95	04/18/86	47.03	872.07	05/27/86	47.49	871.61
09/27/85	46.99	872.11	11/05/85	47.07	872.03	04/19/86	46.94	872.16	05/28/86	47.66	871.44
09/27/85	47.08	872.02	11/05/85	47.15	871.95	04/19/86	46.91	872.19	05/28/86	47.49	871.61
09/28/85	47.09	872.01	11/06/85	47.11	871.99	04/20/86	47.06	872.04	05/29/86	47.55	871.55
09/28/85	47.14	871.96	11/06/85	47.14	871.96	04/20/86	46.94	872.16	05/29/86	47.62	871.48
09/29/85	47.15	871.95	11/07/85	47.12	871.98	04/21/86	47.13	871.97	05/30/86	47.55	871.55
09/29/85	47.14	871.96	11/07/85	47.17	871.93	04/21/86	47.06	872.04	05/30/86	47.54	871.56
09/30/85	47.15	871.95	11/08/85	47.17	871.93	04/22/86	47.11	871.99	05/31/86	47.67	871.43
09/30/85	47.13	871.97	11/08/85	47.22	871.88	04/22/86	47.13	871.97	05/31/86	47.53	871.57
10/01/85	47.13	871.97	11/09/85	47.22	871.88	04/23/86	47.21	871.89	06/01/86	47.61	871.49
10/01/85	47.09	872.01	11/09/85	47.28	871.82	04/23/86	47.11	871.99	06/01/86	47.59	871.51
10/02/85	47.05	872.05	11/10/85	47.27	871.83	04/24/86	47.30	871.80	06/02/86	47.56	871.54
10/02/85	47.09	872.01	11/10/85	47.31	871.79	04/24/86	47.22	871.88	06/02/86	47.69	871.41
10/03/85	47.03	872.07	11/11/85	47.31	871.79	04/25/86	47.30	871.80	06/03/86	47.53	871.57
10/03/85	47.06	872.04	11/11/85	47.24	871.86	04/25/86	47.19	871.91	06/03/86	47.60	871.50
10/04/85	47.04	872.06	11/12/85	47.23	871.87	04/26/86	47.21	871.89	06/04/86	47.58	871.52
10/04/85	47.11	871.99	11/12/85	47.25	871.85	04/26/86	47.13	871.97	06/04/86	47.78	871.32
10/05/85	47.10	872.00	11/13/85	47.26	871.84	04/27/86	47.13	871.97	06/05/86	47.74	871.36
10/05/85	47.12	871.98	11/13/85	47.24	871.86	04/27/86	47.01	872.09	06/05/86	47.61	871.49
10/06/85	47.11	871.99	11/14/85	47.30	871.80	04/28/86	47.00	872.10	06/06/86	47.52	871.58
10/06/85	47.08	872.02	11/14/85	47.26	871.84	04/28/86	46.95	872.15	06/06/86	47.62	871.48
10/07/85	46.98	872.12	11/15/85	47.25	871.85	04/29/86	46.97	872.13	06/07/86	47.56	871.54
10/07/85	47.11	871.99	11/15/85	47.31	871.79	04/29/86	46.95	872.15	06/07/86	47.52	871.58
10/08/85	47.14	871.96	11/16/85	47.18	871.92	04/30/86	47.01	872.09	06/08/86	47.65	871.45
10/08/85	46.97	872.13	11/16/85	47.24	871.86	04/30/86	46.94	872.16	06/08/86	47.61	871.49
10/09/85	47.15	871.95	11/17/85	47.22	871.88	05/01/86	47.15	871.95	06/08/86	47.56	871.54
10/09/85	47.18	871.92	11/17/85	47.18	871.92	05/01/86	47.02	872.08	06/09/86	47.62	871.48
10/10/85	47.13	871.97	11/18/85	47.23	871.87	05/02/86	47.20	871.90	06/09/86	47.59	871.51
10/10/85	47.17	871.93	11/18/85	47.11	871.99	05/02/86	47.15	871.95	06/10/86	47.61	871.49
10/11/85	47.13	871.97	11/19/85	47.11	871.99	05/03/86	47.13	871.97	06/10/86	47.62	871.48
10/11/85	47.07	872.03	11/19/85	47.16	871.94	05/03/86	47.20	871.90	06/11/86	47.61	871.49
10/12/85	47.01	872.09	11/20/85	47.16	871.94	05/04/86	47.05	872.05	06/11/86	47.63	871.47
10/12/85	47.06	872.04	11/20/85	47.26	871.84	05/04/86	47.12	871.98	06/12/86	47.63	871.47
10/13/85	47.07	872.03	11/21/85	47.27	871.83	05/05/86	47.07	872.03	06/12/86	47.70	871.40
10/13/85	47.09	872.01	11/21/85	47.23	871.87	05/05/86	47.03	872.07	06/13/86	47.73	871.37
10/14/85	47.09	872.01	11/22/85	47.16	871.94	05/06/86	47.07	872.03	06/13/86	47.70	871.40
10/14/85	47.06	872.04	11/22/85	47.22	871.88	05/06/86	47.23	871.87	06/14/86	47.69	871.41
10/15/85	47.08	872.02	11/23/85	47.18	871.92	05/07/86	47.29	871.81	06/14/86	47.74	871.36
10/15/85	47.14	871.96	11/23/85	47.21	871.89	05/07/86	47.23	871.87	06/15/86	47.58	871.52
10/16/85	47.08	872.02	11/24/85	47.24	871.86	05/08/86	47.27	871.83	06/15/86	47.68	871.42
10/16/85	47.15	871.95	11/24/85	47.21	871.89	05/08/86	47.20	871.90	06/16/86	47.62	871.48
10/17/85	47.12	871.98	11/25/85	47.25	871.85	05/09/86	47.15	871.95	06/16/86	47.70	871.40
10/17/85	47.05	872.05	11/25/85	47.13	871.97	05/09/86	47.19	871.91	06/17/86	47.72	871.38
10/18/85	47.17	871.93	11/26/85	47.19	871.91	05/10/86	47.12	871.98	06/17/86	47.64	871.46
10/18/85	47.12	871.98	11/26/85	47.12	871.98	05/10/86	47.15	871.95	06/18/86	47.61	871.49
10/19/85	47.19	871.91	11/27/85	47.19	871.91	05/10/86	47.55	871.55	06/18/86	47.65	871.45
10/19/85	47.17	871.93	11/27/85	47.19	871.91	05/11/86	47.12	871.98	06/19/86	47.61	871.49
10/20/85	47.15	871.95	11/28/85	47.19	871.91	05/11/86	47.09	872.01	06/19/86	47.75	871.35
10/20/85	47.18	871.92	11/28/85	47.17	871.93	05/12/86	47.09	872.01	06/20/86	47.61	871.49
10/21/85	47.15	871.95	11/29/85	47.21	871.89	05/12/86	47.14	871.96	06/20/86	47.68	871.42
10/21/85	47.11	871.99	11/29/85	47.19	871.91	05/13/86	47.15	871.95	06/21/86	47.64	871.46
10/22/85	47.00	872.10	11/30/85	47.22	871.88	05/13/86	47.14	871.96	06/21/86	47.60	871.50
10/22/85	47.11	871.99	11/30/85	47.21	871.89	05/14/86	47.13	871.97	06/22/86	47.63	871.47
10/23/85	47.04	872.06	12/01/85	47.21	871.89	05/14/86	47.18	871.92	06/22/86	47.68	871.42
10/23/85	47.05	872.05	12/01/85	47.15	871.95	05/15/86	47.18	871.92	06/23/86	47.78	871.32
10/23/85	47.00	872.10	12/02/85	47.22	871.88	05/15/86	47.23	871.87	06/23/86	47.67	871.43
10/24/85	47.14	871.96	12/02/85	47.19	871.91	05/16/86	47.23	871.87	06/24/86	47.79	871.31
10/24/85	47.05	872.05	12/03/85	47.21	871.89	05/16/86	47.30	871.80	06/24/86	47.93	871.17
10/25/85	47.14	871.96	12/03/85	47.11	871.99	05/17/86	47.30	871.80	06/25/86	47.79	871.31
10/25/85	47.09	872.01	12/04/85	47.11	871.99	05/17/86	47.32	871.78	06/25/86	47.98	871.12
10/26/85	47.22	871.88	12/04/85	47.15	871.95	05/18/86	47.32	871.78	06/26/86	47.84	871.26
10/26/85	47.18	871.92	12/05/85	47.17	871.93	05/18/86	47.35	871.75	06/26/86	47.99	871.11

137-049-27BBC **(Continued)** MP Elev (msl,ft)=919.1

Horace Aquifer SI (ft.)=249-300

Date	Depth to Water (ft)	WL Elev (msl. ft)	Date	Depth to Water (ft)	WL Elev (msl. ft)	Date	Depth to Water (ft)	WL Elev (msl. ft)	Date	Depth to Water (ft)	WL Elev (msl. ft)
06/27/86	48.04	871.06	08/04/86	47.93	871.17	09/12/86	48.08	871.02	10/21/86	48.20	870.90
06/27/86	47.86	871.24	08/05/86	47.92	871.18	09/12/86	48.14	870.96	10/22/86	48.16	870.94
06/28/86	47.89	871.21	08/05/86	47.94	871.16	09/13/86	48.21	870.89	10/22/86	48.19	870.91
06/28/86	47.87	871.23	08/06/86	47.93	871.17	09/13/86	48.15	870.95	10/23/86	48.20	870.90
06/29/86	47.82	871.28	08/06/86	47.90	871.20	09/14/86	48.17	870.93	10/23/86	48.24	870.86
06/29/86	47.88	871.22	08/07/86	47.90	871.20	09/14/86	48.20	870.90	10/24/86	48.24	870.86
06/30/86	47.82	871.28	08/07/86	47.92	871.18	09/15/86	48.18	870.92	10/24/86	48.25	870.85
06/30/86	47.83	871.27	08/08/86	47.94	871.16	09/15/86	48.15	870.95	10/25/86	48.20	870.90
07/01/86	47.82	871.28	08/08/86	47.92	871.18	09/16/86	48.12	870.98	10/25/86	48.24	870.86
07/01/86	47.83	871.27	08/09/86	47.92	871.18	09/16/86	48.18	870.92	10/26/86	48.20	870.90
07/02/86	47.84	871.26	08/09/86	47.96	871.14	09/17/86	48.12	870.98	10/26/86	48.15	870.95
07/02/86	47.87	871.23	08/10/86	48.00	871.10	09/17/86	48.09	871.01	10/27/86	48.16	870.94
07/03/86	47.91	871.19	08/10/86	47.96	871.14	09/18/86	48.15	870.95	10/27/86	48.13	870.97
07/03/86	47.72	871.38	08/11/86	48.00	871.10	09/18/86	48.12	870.98	10/28/86	48.23	870.87
07/04/86	47.74	871.36	08/11/86	48.02	871.08	09/19/86	48.06	871.04	10/28/86	48.13	870.97
07/04/86	47.71	871.39	08/12/86	48.01	871.09	09/19/86	48.14	870.96	10/29/86	48.23	870.87
07/05/86	48.39	870.71	08/12/86	47.97	871.13	09/20/86	48.07	871.03	10/29/86	48.26	870.84
07/05/86	47.79	871.31	08/13/86	47.97	871.13	09/20/86	48.08	871.02	10/30/86	48.13	870.97
07/05/86	47.68	871.42	08/13/86	47.91	871.19	09/21/86	48.07	871.03	10/30/86	48.26	870.84
07/06/86	47.86	871.24	08/14/86	47.91	871.19	09/21/86	48.01	871.09	10/31/86	48.14	870.96
07/06/86	47.79	871.31	08/14/86	47.91	871.19	09/22/86	48.03	871.07	10/31/86	48.31	870.79
07/07/86	47.90	871.20	08/15/86	47.92	871.18	09/22/86	47.98	871.12	11/01/86	48.31	870.79
07/07/86	47.86	871.24	08/15/86	47.90	871.20	09/23/86	47.96	871.14	11/01/86	48.33	870.77
07/08/86	47.87	871.23	08/16/86	47.90	871.20	09/23/86	47.98	871.12	11/01/86	48.40	870.70
07/08/86	47.89	871.21	08/16/86	47.98	871.12	09/24/86	47.91	871.19	11/02/86	48.33	870.77
07/09/86	47.87	871.23	08/17/86	47.99	871.11	09/24/86	47.96	871.14	11/02/86	48.22	870.88
07/09/86	47.89	871.21	08/17/86	48.05	871.05	09/25/86	47.90	871.20	11/03/86	48.29	870.81
07/10/86	47.73	871.37	08/18/86	48.04	871.06	09/25/86	47.85	871.25	11/03/86	48.22	870.88
07/10/86	47.87	871.23	08/18/86	48.06	871.04	09/26/86	47.94	871.16	11/04/86	48.29	870.81
07/11/86	47.74	871.36	08/19/86	48.01	871.09	09/26/86	47.90	871.20	11/04/86	48.20	870.90
07/11/86	47.72	871.38	08/19/86	48.04	871.06	09/27/86	48.00	871.10	11/05/86	48.21	870.89
07/12/86	47.72	871.38	08/20/86	48.02	871.08	09/27/86	47.93	871.17	11/05/86	48.17	870.93
07/12/86	47.73	871.37	08/20/86	48.11	870.99	09/28/86	47.96	871.14	11/06/86	48.23	870.87
07/13/86	47.73	871.37	08/21/86	48.10	871.00	09/28/86	48.02	871.08	11/06/86	48.17	870.93
07/13/86	47.81	871.29	08/21/86	48.13	870.97	09/29/86	47.99	871.11	11/07/86	48.23	870.87
07/14/86	47.81	871.29	08/22/86	48.10	871.00	09/29/86	47.96	871.14	11/07/86	48.03	871.07
07/14/86	47.83	871.27	08/22/86	47.98	871.12	09/30/86	48.03	871.07	11/08/86	48.13	870.97
07/15/86	47.80	871.30	08/23/86	48.02	871.08	09/30/86	47.99	871.11	11/08/86	47.98	871.12
07/15/86	47.82	871.28	08/23/86	48.04	871.06	10/01/86	48.02	871.08	11/09/86	48.25	870.85
07/16/86	47.82	871.28	08/24/86	48.03	871.07	10/01/86	48.05	871.05	11/09/86	48.14	870.96
07/16/86	47.75	871.35	08/24/86	47.96	871.14	10/02/86	48.05	871.05	11/10/86	48.28	870.82
07/17/86	47.75	871.35	08/25/86	48.00	871.10	10/02/86	48.01	871.09	11/10/86	48.24	870.86
07/17/86	47.78	871.32	08/25/86	47.96	871.14	10/03/86	48.05	871.05	11/11/86	48.25	870.85
07/18/86	47.78	871.32	08/26/86	48.05	871.05	10/03/86	48.09	871.01	11/11/86	48.21	870.89
07/18/86	47.82	871.28	08/26/86	48.00	871.10	10/04/86	48.09	871.01	11/12/86	48.34	870.76
07/19/86	47.79	871.31	08/27/86	48.08	871.02	10/04/86	48.04	871.06	11/12/86	48.26	870.84
07/19/86	47.86	871.24	08/27/86	48.06	871.04	10/05/86	48.13	870.97	11/13/86	48.21	870.89
07/20/86	47.86	871.24	08/28/86	48.09	871.01	10/05/86	48.06	871.04	11/13/86	48.34	870.76
07/20/86	47.90	871.20	08/28/86	48.06	871.04	10/06/86	48.06	871.04	11/14/86	48.18	870.92
07/21/86	47.86	871.24	08/29/86	48.06	871.04	10/06/86	48.13	870.97	11/14/86	48.23	870.87
07/21/86	47.88	871.22	08/29/86	48.03	871.07	10/07/86	48.03	871.07	11/15/86	48.23	870.87
07/22/86	47.87	871.23	08/30/86	48.05	871.05	10/07/86	48.09	871.01	11/15/86	48.14	870.96
07/22/86	47.90	871.20	08/30/86	48.03	871.07	10/08/86	48.10	871.00	11/16/86	48.11	870.99
07/23/86	47.84	871.26	08/30/86	48.19	870.91	10/08/86	48.19	870.91	11/16/86	48.16	870.94
07/23/86	47.88	871.22	08/31/86	48.04	871.06	10/09/86	48.22	870.88	11/17/86	48.21	870.89
07/24/86	47.83	871.27	08/31/86	48.02	871.08	10/09/86	48.16	870.94	11/17/86	48.16	870.94
07/24/86	47.88	871.22	09/01/86	48.05	871.05	10/10/86	48.10	871.00	11/18/86	48.25	870.85
07/25/86	47.88	871.22	09/01/86	48.03	871.07	10/10/86	48.15	870.95	11/18/86	48.20	870.90
07/25/86	47.91	871.19	09/02/86	47.98	871.12	10/10/86	48.02	871.08	11/19/86	48.19	870.91
07/26/86	47.82	871.28	09/02/86	48.03	871.07	10/11/86	48.14	870.96	11/19/86	48.09	871.01
07/26/86	47.90	871.20	09/03/86	47.98	871.12	10/11/86	48.18	870.92	11/20/86	48.20	870.90
07/27/86	47.83	871.27	09/03/86	47.96	871.14	10/12/86	48.19	870.91	11/20/86	48.16	870.94
07/27/86	47.81	871.29	09/03/86	47.98	871.12	10/12/86	48.16	870.94	11/21/86	48.12	870.98
07/28/86	47.86	871.24	09/04/86	48.14	870.96	10/13/86	48.15	870.95	11/21/86	48.17	870.93
07/28/86	47.84	871.26	09/04/86	47.98	871.12	10/13/86	48.12	870.98	11/22/86	48.19	870.91
07/29/86	47.88	871.22	09/04/86	48.08	871.02	10/14/86	48.10	871.00	11/22/86	48.14	870.96
07/29/86	47.86	871.24	09/05/86	48.08	871.02	10/14/86	48.16	870.94	11/23/86	48.19	870.91
07/30/86	47.87	871.23	09/05/86	48.12	870.98	10/15/86	48.13	870.97	11/23/86	48.22	870.88
07/30/86	47.80	871.30	09/06/86	48.15	870.95	10/15/86	48.18	870.92	11/24/86	48.13	870.97
07/30/86	47.85	871.25	09/06/86	48.13	870.97	10/16/86	48.18	870.92	11/24/86	48.18	870.92
07/31/86	47.87	871.23	09/07/86	48.16	870.94	10/16/86	48.13	870.97	11/25/86	48.21	870.89
07/31/86	47.90	871.20	09/07/86	48.13	870.97	10/17/86	48.20	870.90	11/25/86	48.12	870.98
08/01/86	47.91	871.19	09/08/86	48.13	870.97	10/17/86	48.18	870.92	11/26/86	48.21	870.89
08/01/86	47.88	871.22	09/08/86	48.11	870.99	10/18/86	48.21	870.89	11/26/86	48.11	870.99
08/02/86	47.99	871.11	09/09/86	48.11	870.99	10/18/86	48.18	870.92	11/26/86	48.15	870.95
08/02/86	47.95	871.15	09/09/86	48.06	871.04	10/19/86	48.19	870.91	11/27/86	48.10	871.00
08/02/86	47.91	871.19	09/10/86	48.04	871.06	10/19/86	48.21	870.89	11/27/86	48.13	870.97
08/03/86	47.94	871.16	09/10/86	48.06	871.04	10/20/86	48.21	870.89	11/28/86	48.11	870.99
08/03/86	47.96	871.14	09/11/86	48.04	871.06	10/20/86	48.19	870.91	11/28/86	48.17	870.93
08/04/86	47.95	871.15	09/11/86	48.08	871.02	10/21/86	48.16	870.94	11/29/86	48.23	870.87

137-049-27BBC **(Continued)** MP Elev (msl,ft)=919.1

Horace Aquifer SI (ft.)=249-300

Date	Depth to Water (ft)	WL Elev (msl, ft)	Date	Depth to Water (ft)	WL Elev (msl, ft)	Date	Depth to Water (ft)	WL Elev (msl, ft)	Date	Depth to Water (ft)	WL Elev (msl, ft)
11/29/86	48.18	870.92	01/07/87	48.37	870.73	02/14/87	48.31	870.79	03/25/87	48.22	870.88
11/30/86	48.27	870.83	01/07/87	48.31	870.79	02/15/87	48.36	870.74	03/25/87	48.20	870.90
11/30/86	48.22	870.88	01/07/87	48.29	870.81	02/15/87	48.35	870.75	03/26/87	48.17	870.93
12/01/86	48.27	870.83	01/08/87	48.25	870.85	02/16/87	48.36	870.74	03/26/87	48.22	870.88
12/01/86	48.21	870.89	01/08/87	48.29	870.81	02/16/87	48.34	870.76	03/27/87	48.27	870.83
12/01/86	48.20	870.90	01/09/87	48.24	870.86	02/17/87	48.35	870.75	03/27/87	48.16	870.94
12/02/86	48.13	870.97	01/09/87	48.29	870.81	02/17/87	48.37	870.73	03/28/87	48.27	870.83
12/02/86	48.20	870.90	01/10/87	48.30	870.80	02/18/87	48.34	870.76	03/28/87	48.34	870.76
12/03/86	48.16	870.94	01/10/87	48.27	870.83	02/18/87	48.35	870.75	03/29/87	48.33	870.77
12/03/86	48.20	870.90	01/11/87	48.26	870.84	02/19/87	48.39	870.71	03/29/87	48.34	870.76
12/04/86	48.25	870.85	01/11/87	48.21	870.89	02/19/87	48.36	870.74	03/30/87	48.29	870.81
12/04/86	48.21	870.89	01/12/87	48.22	870.88	02/20/87	48.39	870.71	03/30/87	48.33	870.77
12/05/86	48.18	870.92	01/12/87	48.24	870.86	02/20/87	48.30	870.80	03/31/87	48.29	870.81
12/05/86	48.25	870.85	01/13/87	48.20	870.90	02/21/87	48.30	870.80	03/31/87	48.21	870.89
12/06/86	48.28	870.82	01/13/87	48.23	870.87	02/21/87	48.27	870.83	04/01/87	48.36	870.74
12/06/86	48.32	870.78	01/14/87	48.24	870.86	02/22/87	48.30	870.80	04/01/87	48.23	870.87
12/06/86	48.25	870.85	01/14/87	48.26	870.84	02/22/87	48.33	870.77	04/02/87	48.38	870.72
12/07/86	48.25	870.85	01/14/87	48.32	870.78	02/23/87	48.36	870.74	04/02/87	48.36	870.74
12/07/86	48.22	870.88	01/15/87	48.38	870.72	02/23/87	48.32	870.78	04/03/87	48.36	870.74
12/08/86	48.17	870.93	01/15/87	48.33	870.77	02/24/87	48.34	870.76	04/03/87	48.38	870.72
12/08/86	48.21	870.89	01/16/87	48.38	870.72	02/24/87	48.35	870.75	04/04/87	48.37	870.73
12/09/86	48.20	870.90	01/16/87	48.33	870.77	02/25/87	48.34	870.76	04/04/87	48.41	870.69
12/09/86	48.24	870.86	01/17/87	48.33	870.77	02/25/87	48.37	870.73	04/05/87	48.41	870.69
12/10/86	48.24	870.86	01/17/87	48.30	870.80	02/26/87	48.37	870.73	04/05/87	48.43	870.67
12/10/86	48.11	870.99	01/18/87	48.23	870.87	02/26/87	48.33	870.77	04/06/87	48.42	870.68
12/11/86	48.21	870.89	01/18/87	48.30	870.80	02/27/87	48.34	870.76	04/06/87	48.43	870.67
12/11/86	48.12	870.98	01/19/87	48.28	870.82	02/27/87	48.31	870.79	04/07/87	48.38	870.72
12/12/86	48.31	870.79	01/19/87	48.22	870.88	02/28/87	48.31	870.79	04/07/87	48.42	870.68
12/12/86	48.21	870.89	01/20/87	48.18	870.92	02/28/87	48.23	870.87	04/08/87	48.38	870.72
12/13/86	48.18	870.92	01/20/87	48.28	870.82	03/01/87	48.24	870.86	04/08/87	48.31	870.79
12/13/86	48.31	870.79	01/21/87	48.26	870.84	03/01/87	48.22	870.88	04/09/87	48.31	870.79
12/14/86	48.18	870.92	01/21/87	48.16	870.94	03/02/87	48.32	870.78	04/09/87	48.28	870.82
12/14/86	48.22	870.88	01/22/87	48.26	870.84	03/02/87	48.22	870.88	04/10/87	48.30	870.80
12/15/86	48.23	870.87	01/22/87	48.31	870.79	03/03/87	48.33	870.77	04/10/87	48.26	870.84
12/15/86	48.21	870.89	01/23/87	48.27	870.83	03/03/87	48.30	870.80	04/11/87	48.31	870.79
12/16/86	48.23	870.87	01/23/87	48.30	870.80	03/03/87	48.37	870.73	04/11/87	48.27	870.83
12/16/86	48.18	870.92	01/24/87	48.32	870.78	03/04/87	48.29	870.81	04/12/87	48.31	870.79
12/17/86	48.21	870.89	01/24/87	48.29	870.81	03/04/87	48.28	870.82	04/12/87	48.36	870.74
12/17/86	48.24	870.86	01/25/87	48.32	870.78	03/05/87	48.30	870.80	04/13/87	48.36	870.74
12/18/86	48.24	870.86	01/25/87	48.31	870.79	03/05/87	48.26	870.84	04/13/87	48.38	870.72
12/18/86	48.19	870.91	01/26/87	48.31	870.79	03/06/87	48.25	870.85	04/14/87	48.38	870.72
12/19/86	48.25	870.85	01/26/87	48.26	870.84	03/06/87	48.22	870.88	04/14/87	48.34	870.76
12/19/86	48.22	870.88	01/27/87	48.30	870.80	03/07/87	48.24	870.86	04/15/87	48.34	870.76
12/20/86	48.26	870.84	01/27/87	48.25	870.85	03/07/87	48.21	870.89	04/15/87	48.30	870.80
12/20/86	48.28	870.82	01/28/87	48.30	870.80	03/08/87	48.35	870.75	04/16/87	48.31	870.79
12/21/86	48.24	870.86	01/28/87	48.30	870.80	03/08/87	48.24	870.86	04/16/87	48.28	870.82
12/21/86	48.29	870.81	01/28/87	48.23	870.87	03/09/87	48.35	870.75	04/17/87	48.27	870.83
12/22/86	48.23	870.87	01/29/87	48.25	870.85	03/09/87	48.38	870.72	04/17/87	48.29	870.81
12/22/86	48.24	870.86	01/29/87	48.19	870.91	03/10/87	48.38	870.72	04/18/87	48.28	870.82
12/23/86	48.20	870.90	01/30/87	48.28	870.82	03/10/87	48.36	870.74	04/18/87	48.27	870.83
12/23/86	48.23	870.87	01/30/87	48.25	870.85	03/11/87	48.40	870.70	04/19/87	48.25	870.85
12/24/86	48.19	870.91	01/31/87	48.26	870.84	03/11/87	48.34	870.76	04/19/87	48.29	870.81
12/24/86	48.21	870.89	01/31/87	48.18	870.92	03/12/87	48.41	870.69	04/20/87	48.29	870.81
12/25/86	48.27	870.83	02/01/87	48.20	870.90	03/12/87	48.40	870.70	04/20/87	48.44	870.66
12/25/86	48.21	870.89	02/01/87	48.15	870.95	03/12/87	48.38	870.72	04/21/87	48.44	870.66
12/26/86	48.24	870.86	02/02/87	48.24	870.86	03/13/87	48.37	870.73	04/21/87	48.48	870.62
12/26/86	48.27	870.83	02/02/87	48.12	870.98	03/13/87	48.29	870.81	04/22/87	48.44	870.66
12/27/86	48.22	870.88	02/03/87	48.32	870.78	03/14/87	48.30	870.80	04/22/87	48.39	870.71
12/27/86	48.25	870.85	02/03/87	48.25	870.85	03/14/87	48.33	870.77	04/23/87	48.41	870.69
12/28/86	48.25	870.85	02/04/87	48.36	870.74	03/15/87	48.35	870.75	04/23/87	48.57	870.53
12/28/86	48.21	870.89	02/04/87	48.32	870.78	03/15/87	48.33	870.77	04/24/87	48.46	870.64
12/29/86	48.24	870.86	02/05/87	48.36	870.74	03/16/87	48.34	870.76	04/24/87	48.61	870.49
12/29/86	48.28	870.82	02/05/87	48.35	870.75	03/16/87	48.36	870.74	04/25/87	48.45	870.65
12/30/86	48.28	870.82	02/06/87	48.35	870.75	03/17/87	48.35	870.75	04/25/87	48.61	870.49
12/30/86	48.20	870.90	02/06/87	48.32	870.78	03/17/87	48.30	870.80	04/25/87	48.51	870.59
12/31/86	48.27	870.83	02/07/87	48.24	870.86	03/18/87	48.26	870.84	04/26/87	48.50	870.60
12/31/86	48.18	870.92	02/07/87	48.35	870.75	03/18/87	48.30	870.80	04/26/87	48.46	870.64
			02/08/87	48.41	870.69	03/19/87	48.28	870.82	04/27/87	48.54	870.56
01/01/87	48.27	870.83	02/08/87	48.36	870.74	03/19/87	48.25	870.85	04/27/87	48.50	870.60
01/01/87	48.29	870.81	02/09/87	48.29	870.81	03/20/87	48.25	870.85	04/28/87	48.40	870.70
01/02/87	48.27	870.83	02/09/87	48.35	870.75	03/20/87	48.28	870.82	04/28/87	48.50	870.60
01/02/87	48.23	870.87	02/10/87	48.32	870.78	03/21/87	48.22	870.88	04/29/87	48.43	870.67
01/03/87	48.25	870.85	02/10/87	48.33	870.77	03/21/87	48.25	870.85	04/29/87	48.66	870.44
01/03/87	48.26	870.84	02/11/87	48.34	870.76	03/22/87	48.27	870.83	04/30/87	48.49	870.61
01/04/87	48.26	870.84	02/11/87	48.28	870.82	03/22/87	48.22	870.88	04/30/87	48.66	870.44
01/04/87	48.22	870.88	02/12/87	48.37	870.73	03/23/87	48.23	870.87	05/01/87	48.59	870.51
01/05/87	48.21	870.89	02/12/87	48.34	870.76	03/23/87	48.26	870.84	05/01/87	48.44	870.66
01/05/87	48.23	870.87	02/13/87	48.33	870.77	03/24/87	48.23	870.87	05/02/87	48.46	870.64
01/06/87	48.28	870.82	02/13/87	48.30	870.80	03/24/87	48.22	870.88	05/02/87	48.48	870.62
01/06/87	48.21	870.89	02/14/87	48.36	870.74	03/24/87	48.21	870.89	05/03/87	48.48	870.62

137-049-27BBC **(Continued)** MP Elev (msl,ft)=919.1

Horace Aquifer SI (ft.)=249-300

Date	Depth to Water (ft)	WL Elev (msl. ft)	Date	Depth to Water (ft)	WL Elev (msl. ft)	Date	Depth to Water (ft)	WL Elev (msl. ft)	Date	Depth to Water (ft)	WL Elev (msl. ft)
05/03/87	48.65	870.45	06/12/87	48.76	870.34	07/21/87	49.29	869.81	08/29/87	49.74	869.36
05/04/87	48.57	870.53	06/12/87	48.79	870.31	07/21/87	49.34	869.76	08/29/87	49.67	869.43
05/04/87	48.78	870.32	06/13/87	48.78	870.32	07/22/87	49.28	869.82	08/29/87	49.62	869.48
05/05/87	48.59	870.51	06/13/87	48.80	870.30	07/22/87	49.30	869.80	08/30/87	49.65	869.45
05/05/87	48.64	870.46	06/14/87	48.79	870.31	07/23/87	49.27	869.83	08/30/87	49.70	869.40
05/06/87	48.59	870.51	06/14/87	48.86	870.24	07/23/87	49.46	869.64	08/31/87	49.70	869.40
05/06/87	48.70	870.40	06/15/87	48.86	870.24	07/24/87	49.36	869.74	08/31/87	49.74	869.36
05/07/87	48.60	870.50	06/15/87	48.88	870.22	07/24/87	49.52	869.58	09/01/87	49.86	869.24
05/07/87	48.71	870.39	06/16/87	49.07	870.03	07/25/87	49.41	869.69	09/01/87	49.70	869.40
05/08/87	48.72	870.38	06/16/87	48.86	870.24	07/25/87	49.57	869.53	09/02/87	49.91	869.19
05/08/87	48.59	870.51	06/17/87	48.88	870.22	07/26/87	49.39	869.71	09/02/87	49.73	869.37
05/09/87	48.54	870.56	06/17/87	48.83	870.27	07/26/87	49.47	869.63	09/03/87	49.67	869.43
05/09/87	48.57	870.53	06/18/87	48.85	870.25	07/27/87	49.37	869.73	09/03/87	49.72	869.38
05/10/87	48.60	870.50	06/18/87	48.90	870.20	07/27/87	49.39	869.71	09/04/87	49.67	869.43
05/10/87	48.50	870.60	06/19/87	48.88	870.22	07/28/87	49.37	869.73	09/04/87	49.70	869.40
05/11/87	48.56	870.54	06/19/87	48.90	870.20	07/28/87	49.55	869.55	09/05/87	49.66	869.44
05/11/87	48.78	870.32	06/20/87	48.88	870.22	07/29/87	49.41	869.69	09/05/87	49.69	869.41
05/12/87	48.77	870.33	06/20/87	49.06	870.04	07/29/87	49.42	869.68	09/06/87	49.66	869.44
05/12/87	48.59	870.51	06/21/87	49.00	870.10	07/30/87	49.41	869.69	09/06/87	49.67	869.43
05/13/87	48.56	870.54	06/21/87	48.88	870.22	07/30/87	49.41	869.69	09/07/87	49.66	869.44
05/13/87	48.61	870.49	06/22/87	48.90	870.20	07/31/87	49.60	869.50	09/07/87	49.70	869.40
05/14/87	48.62	870.48	06/22/87	48.88	870.22	07/31/87	49.40	869.70	09/08/87	49.70	869.40
05/14/87	48.76	870.34	06/23/87	48.88	870.22	08/01/87	49.51	869.59	09/08/87	49.69	869.41
05/15/87	48.58	870.52	06/23/87	48.95	870.15	08/01/87	49.40	869.70	09/09/87	49.68	869.42
05/15/87	48.70	870.40	06/24/87	49.04	870.06	08/01/87	49.58	869.52	09/09/87	49.69	869.41
05/16/87	48.57	870.53	06/24/87	48.95	870.15	08/02/87	49.34	869.76	09/10/87	49.67	869.43
05/16/87	48.58	870.52	06/25/87	48.98	870.12	08/02/87	49.42	869.68	09/10/87	49.70	869.40
05/17/87	48.62	870.48	06/25/87	49.12	869.98	08/03/87	49.34	869.76	09/11/87	49.70	869.40
05/17/87	48.59	870.51	06/26/87	49.03	870.07	08/03/87	49.46	869.64	09/11/87	49.72	869.38
05/18/87	48.59	870.51	06/26/87	49.05	870.05	08/03/87	49.40	869.70	09/12/87	49.71	869.39
05/18/87	48.60	870.50	06/27/87	49.20	869.90	08/04/87	49.44	869.66	09/12/87	49.69	869.41
05/19/87	48.60	870.50	06/27/87	49.22	869.88	08/04/87	49.41	869.69	09/13/87	49.69	869.41
05/19/87	48.58	870.52	06/27/87	49.02	870.08	08/05/87	49.35	869.75	09/13/87	49.71	869.39
05/20/87	48.59	870.51	06/28/87	49.03	870.07	08/05/87	49.42	869.68	09/14/87	49.71	869.39
05/20/87	48.56	870.54	06/28/87	49.18	869.92	08/06/87	49.44	869.66	09/14/87	49.72	869.38
05/21/87	48.55	870.55	06/29/87	49.08	870.02	08/06/87	49.36	869.74	09/15/87	49.72	869.38
05/21/87	48.60	870.50	06/29/87	49.05	870.05	08/07/87	49.48	869.62	09/15/87	49.73	869.37
05/22/87	48.66	870.44	06/30/87	49.11	869.99	08/07/87	49.44	869.66	09/16/87	49.70	869.40
05/22/87	48.61	870.49	06/30/87	49.08	870.02	08/08/87	49.45	869.65	09/16/87	49.72	869.38
05/23/87	48.68	870.42	07/01/87	49.09	870.01	08/08/87	49.46	869.64	09/17/87	49.70	869.40
05/23/87	48.65	870.45	07/01/87	49.03	870.07	08/09/87	49.48	869.62	09/17/87	49.75	869.35
05/24/87	48.63	870.47	07/02/87	49.03	870.07	08/09/87	49.44	869.66	09/18/87	49.76	869.34
05/24/87	48.66	870.44	07/02/87	49.08	870.02	08/10/87	49.50	869.60	09/18/87	49.70	869.40
05/25/87	48.64	870.46	07/03/87	49.22	869.88	08/10/87	49.46	869.64	09/19/87	49.70	869.40
05/25/87	48.51	870.59	07/03/87	49.08	870.02	08/11/87	49.43	869.67	09/19/87	49.73	869.37
05/26/87	48.53	870.57	07/04/87	49.08	870.02	08/11/87	49.47	869.63	09/20/87	49.79	869.31
05/26/87	48.50	870.60	07/04/87	49.11	869.99	08/12/87	49.60	869.50	09/20/87	49.73	869.37
05/27/87	48.52	870.58	07/05/87	49.08	870.02	08/12/87	49.46	869.64	09/21/87	49.83	869.27
05/27/87	48.50	870.60	07/05/87	49.07	870.03	08/13/87	49.52	869.58	09/21/87	49.79	869.31
05/28/87	48.50	870.60	07/06/87	49.07	870.03	08/13/87	49.51	869.59	09/22/87	49.83	869.27
05/28/87	48.54	870.56	07/06/87	49.09	870.01	08/14/87	49.47	869.63	09/22/87	49.81	869.29
05/29/87	48.56	870.54	07/07/87	49.08	870.02	08/14/87	49.51	869.59	09/23/87	49.79	869.31
05/29/87	48.54	870.56	07/07/87	49.28	869.82	08/15/87	49.48	869.62	09/23/87	49.81	869.29
05/30/87	48.59	870.51	07/08/87	49.17	869.93	08/15/87	49.42	869.68	09/24/87	49.80	869.30
05/30/87	48.71	870.39	07/08/87	49.34	869.76	08/16/87	49.48	869.62	09/24/87	49.85	869.25
05/30/87	48.56	870.54	07/09/87	49.18	869.92	08/16/87	49.44	869.66	09/24/87	49.84	869.26
05/31/87	48.58	870.52	07/09/87	49.18	869.92	08/17/87	49.48	869.62	09/25/87	49.84	869.26
05/31/87	48.55	870.55	07/09/87	49.08	870.02	08/17/87	49.53	869.57	09/25/87	49.78	869.32
06/01/87	48.58	870.52	07/10/87	49.11	869.99	08/18/87	49.56	869.54	09/26/87	49.74	869.36
06/01/87	48.53	870.57	07/10/87	49.16	869.94	08/18/87	49.53	869.57	09/26/87	49.86	869.24
06/02/87	48.58	870.52	07/11/87	49.12	869.98	08/19/87	49.59	869.51	09/26/87	49.78	869.32
06/02/87	48.62	870.48	07/11/87	49.16	869.94	08/19/87	49.56	869.54	09/27/87	49.74	869.36
06/03/87	48.63	870.47	07/12/87	49.16	869.94	08/20/87	49.77	869.33	09/27/87	49.77	869.33
06/03/87	48.71	870.39	07/12/87	49.21	869.89	08/20/87	49.57	869.53	09/28/87	49.77	869.33
06/04/87	48.82	870.28	07/13/87	49.21	869.89	08/21/87	49.57	869.53	09/28/87	49.79	869.31
06/04/87	48.70	870.40	07/13/87	49.23	869.87	08/21/87	49.63	869.47	09/29/87	49.85	869.25
06/05/87	48.93	870.17	07/14/87	49.21	869.89	08/22/87	49.64	869.46	09/29/87	49.80	869.30
06/05/87	48.74	870.36	07/14/87	49.23	869.87	08/22/87	49.70	869.40	09/30/87	49.80	869.30
06/06/87	48.74	870.36	07/15/87	49.19	869.91	08/23/87	49.70	869.40	09/30/87	49.88	869.22
06/06/87	48.69	870.41	07/15/87	49.21	869.89	08/23/87	49.73	869.37	10/01/87	49.87	869.23
06/07/87	48.85	870.25	07/16/87	49.17	869.93	08/24/87	49.89	869.21	10/01/87	49.76	869.34
06/07/87	48.69	870.41	07/16/87	49.29	869.81	08/24/87	49.69	869.41	10/02/87	49.88	869.22
06/08/87	48.79	870.31	07/17/87	49.19	869.91	08/25/87	49.69	869.41	10/02/87	49.94	869.16
06/08/87	48.94	870.16	07/17/87	49.35	869.75	08/25/87	49.73	869.37	10/03/87	49.94	869.16
06/09/87	49.02	870.08	07/18/87	49.21	869.89	08/26/87	49.69	869.41	10/03/87	49.87	869.23
06/09/87	48.85	870.25	07/18/87	49.25	869.85	08/26/87	49.68	869.42	10/04/87	49.86	869.24
06/10/87	48.75	870.35	07/19/87	49.42	869.68	08/27/87	49.70	869.40	10/04/87	49.81	869.29
06/10/87	48.87	870.23	07/19/87	49.21	869.89	08/27/87	49.69	869.41	10/05/87	49.86	869.24
06/11/87	48.74	870.36	07/20/87	49.29	869.81	08/28/87	49.69	869.41	10/05/87	49.79	869.31
06/11/87	48.76	870.34	07/20/87	49.35	869.75	08/28/87	49.67	869.43	10/06/87	49.86	869.24

137-049-27BBC **(Continued)** MP Elev (msl,ft)=919.1

Horace Aquifer SI (ft.)=249-300

Date	Depth to Water (ft)	WL Elev (msl. ft)	Date	Depth to Water (ft)	WL Elev (msl. ft)	Date	Depth to Water (ft)	WL Elev (msl. ft)	Date	Depth to Water (ft)	WL Elev (msl. ft)
10/06/87	49.91	869.19	11/15/87	50.34	868.76	12/23/87	50.08	869.02	02/01/88	50.11	868.99
10/07/87	49.92	869.18	11/15/87	50.39	868.71	12/24/87	50.14	868.96	02/01/88	50.14	868.96
10/07/87	49.90	869.20	11/16/87	50.39	868.71	12/24/87	50.16	868.94	02/02/88	50.14	868.96
10/08/87	49.84	869.26	11/16/87	50.34	868.76	12/25/87	50.19	868.91	02/02/88	50.12	868.98
10/08/87	49.90	869.20	11/17/87	50.35	868.75	12/25/87	50.17	868.93	02/03/88	50.16	868.94
10/09/87	49.90	869.20	11/17/87	50.38	868.72	12/26/87	50.17	868.93	02/03/88	50.12	868.98
10/09/87	50.01	869.09	11/18/87	50.28	868.82	12/26/87	50.19	868.91	02/04/88	50.18	868.92
10/10/87	50.02	869.08	11/18/87	50.38	868.72	12/27/87	50.21	868.89	02/04/88	50.16	868.94
10/10/87	50.03	869.07	11/19/87	50.30	868.80	12/27/87	50.17	868.93	02/05/88	50.19	868.91
10/11/87	49.95	869.15	11/19/87	50.27	868.83	12/28/87	50.22	868.88	02/05/88	50.18	868.92
10/11/87	50.02	869.08	11/20/87	50.31	868.79	12/28/87	50.21	868.89	02/06/88	50.18	868.92
10/12/87	49.92	869.18	11/20/87	50.28	868.82	12/29/87	50.15	868.95	02/06/88	50.04	869.06
10/12/87	49.95	869.15	11/21/87	50.27	868.83	12/29/87	50.23	868.87	02/07/88	50.04	869.06
10/13/87	49.92	869.18	11/21/87	50.13	868.97	12/30/87	50.07	869.03	02/07/88	50.10	869.00
10/13/87	49.89	869.21	11/22/87	50.10	869.00	12/30/87	50.15	868.95	02/08/88	50.08	869.02
10/14/87	49.95	869.15	11/22/87	50.13	868.97	12/31/87	50.18	868.92	02/08/88	50.10	869.00
10/14/87	49.92	869.18	11/23/87	50.12	868.98	12/31/87	50.09	869.01	02/09/88	50.16	868.94
10/15/87	49.93	869.17	11/23/87	50.20	868.90				02/09/88	50.09	869.01
10/15/87	49.96	869.14	11/24/87	50.23	868.87	01/01/88	50.18	868.92	02/10/88	50.21	868.89
10/16/87	49.93	869.17	11/24/87	50.21	868.89	01/01/88	50.17	868.93	02/10/88	50.16	868.94
10/16/87	49.93	869.17	11/24/87	50.24	868.86	01/02/88	50.12	868.98	02/11/88	50.13	868.97
10/17/87	49.91	869.19	11/25/87	50.25	868.85	01/02/88	50.17	868.93	02/11/88	50.21	868.89
10/17/87	49.93	869.17	11/25/87	50.22	868.88	01/03/88	50.16	868.94	02/12/88	50.07	869.03
10/18/87	49.93	869.17	11/26/87	50.26	868.84	01/03/88	50.12	868.98	02/12/88	50.13	868.97
10/18/87	49.96	869.14	11/26/87	50.25	868.85	01/04/88	50.24	868.86	02/13/88	50.07	869.03
10/19/87	49.96	869.14	11/27/87	50.26	868.84	01/04/88	50.17	868.93	02/13/88	49.96	869.14
10/19/87	49.97	869.13	11/27/87	50.24	868.86	01/05/88	50.25	868.85	02/14/88	49.95	869.15
10/20/87	49.97	869.13	11/28/87	50.24	868.86	01/05/88	50.26	868.84	02/14/88	50.02	869.08
10/20/87	50.03	869.07	11/28/87	50.18	868.92	01/06/88	50.27	868.83	02/15/88	49.93	869.17
10/21/87	50.03	869.07	11/28/87	50.24	868.86	01/06/88	50.25	868.85	02/15/88	50.02	869.08
10/21/87	49.98	869.12	11/29/87	50.17	868.93	01/07/88	50.20	868.90	02/16/88	49.93	869.17
10/22/87	50.00	869.10	11/29/87	50.15	868.95	01/07/88	50.25	868.85	02/16/88	50.01	869.09
10/22/87	49.96	869.14	11/30/87	50.15	868.95	01/08/88	50.20	868.90	02/17/88	50.01	869.09
10/23/87	50.02	869.08	11/30/87	50.14	868.96	01/08/88	50.21	868.89	02/17/88	49.99	869.11
10/23/87	49.99	869.11	12/01/87	50.15	868.95	01/09/88	50.18	868.92	02/18/88	49.99	869.11
10/24/87	50.06	869.04	12/01/87	50.13	868.97	01/09/88	50.21	868.89	02/18/88	49.99	869.11
10/24/87	50.02	869.08	12/02/87	50.13	868.97	01/10/88	50.10	869.00	02/19/88	49.93	869.17
10/25/87	49.97	869.13	12/02/87	50.08	869.02	01/10/88	50.18	868.92	02/19/88	49.99	869.11
10/25/87	50.06	869.04	12/03/87	50.16	868.94	01/11/88	50.02	869.08	02/20/88	49.99	869.11
10/26/87	49.94	869.16	12/03/87	50.07	869.03	01/11/88	50.10	869.00	02/20/88	50.04	869.06
10/26/87	49.97	869.13	12/04/87	50.17	868.93	01/12/88	49.99	869.11	02/21/88	50.02	869.08
10/27/87	50.02	869.08	12/04/87	50.15	868.95	01/12/88	50.12	868.98	02/21/88	49.85	869.25
10/27/87	49.98	869.12	12/05/87	50.15	868.95	01/13/88	50.19	868.91	02/22/88	49.85	869.25
10/28/87	50.02	869.08	12/05/87	50.11	868.99	01/13/88	50.12	868.98	02/22/88	49.99	869.11
10/28/87	49.99	869.11	12/06/87	50.12	868.98	01/14/88	50.19	868.91	02/23/88	49.99	869.11
10/29/87	49.99	869.11	12/06/87	50.12	868.98	01/14/88	50.18	868.92	02/23/88	50.04	869.06
10/29/87	49.97	869.13	12/07/87	50.12	868.98	01/15/88	49.94	869.16	02/24/88	50.04	869.06
10/30/87	50.06	869.04	12/07/87	50.08	869.02	01/15/88	50.19	868.91	02/24/88	50.08	869.02
10/30/87	49.97	869.13	12/08/87	50.08	869.02	01/16/88	49.91	869.19	02/25/88	50.08	869.02
10/31/87	50.07	869.03	12/08/87	50.06	869.04	01/16/88	49.99	869.11	02/25/88	50.02	869.08
10/31/87	50.06	869.04	12/09/87	50.07	869.03	01/17/88	50.03	869.07	02/26/88	50.01	869.09
10/31/87	50.27	868.83	12/09/87	50.06	869.04	01/17/88	49.99	869.11	02/26/88	50.07	869.03
11/01/87	50.07	869.03	12/10/87	49.96	869.14	01/18/88	50.07	869.03	02/27/88	50.04	869.06
11/01/87	50.06	869.04	12/10/87	50.07	869.03	01/18/88	50.04	869.06	02/27/88	50.08	869.02
11/02/87	50.02	869.08	12/11/87	49.94	869.16	01/19/88	50.09	869.01	02/28/88	50.03	869.07
11/02/87	50.06	869.04	12/11/87	49.97	869.13	01/19/88	50.08	869.02	02/28/88	50.10	869.00
11/03/87	49.98	869.12	12/12/87	50.04	869.06	01/20/88	50.09	869.01	02/29/88	50.12	868.98
11/03/87	50.02	869.08	12/12/87	49.97	869.13	01/20/88	50.09	869.01	02/29/88	50.10	869.00
11/04/87	49.98	869.12	12/13/87	50.04	869.06	01/21/88	50.07	869.03	03/01/88	50.04	869.06
11/04/87	50.08	869.02	12/13/87	50.13	868.97	01/21/88	50.09	869.01	03/01/88	50.11	868.99
11/05/87	50.08	869.02	12/14/87	50.14	868.96	01/22/88	50.08	869.02	03/02/88	50.11	868.99
11/05/87	50.10	869.00	12/14/87	50.13	868.97	01/22/88	50.06	869.04	03/02/88	50.15	868.95
11/06/87	50.10	869.00	12/15/87	50.14	868.96	01/23/88	49.98	869.12	03/03/88	50.13	868.97
11/06/87	50.06	869.04	12/15/87	50.12	868.98	01/23/88	50.05	869.05	03/03/88	50.15	868.95
11/07/87	50.02	869.08	12/16/87	50.13	868.97	01/24/88	49.98	869.12	03/04/88	50.14	868.96
11/07/87	50.06	869.04	12/16/87	50.18	868.92	01/24/88	50.08	869.02	03/04/88	50.13	868.97
11/08/87	50.14	868.96	12/17/87	50.18	868.92	01/25/88	50.10	869.00	03/05/88	50.08	869.02
11/08/87	50.07	869.03	12/17/87	50.12	868.98	01/25/88	50.08	869.02	03/05/88	50.14	868.96
11/09/87	50.15	868.95	12/18/87	50.09	869.01	01/26/88	50.11	868.99	03/06/88	50.08	869.02
11/09/87	50.22	868.88	12/18/87	50.12	868.98	01/26/88	50.10	869.00	03/06/88	50.09	869.01
11/10/87	50.28	868.82	12/19/87	50.05	869.05	01/27/88	50.13	868.97	03/07/88	50.05	869.05
11/10/87	50.23	868.87	12/19/87	50.19	868.91	01/27/88	50.11	868.99	03/07/88	50.09	869.01
11/11/87	50.29	868.81	12/19/87	50.09	869.01	01/28/88	50.06	869.04	03/08/88	50.06	869.04
11/11/87	50.28	868.82	12/20/87	50.06	869.04	01/28/88	50.13	868.97	03/08/88	50.03	869.07
11/12/87	50.23	868.87	12/20/87	50.05	869.05	01/29/88	49.99	869.11	03/09/88	50.03	869.07
11/12/87	50.28	868.82	12/21/87	50.04	869.06	01/29/88	50.06	869.04	03/09/88	50.06	869.04
11/13/87	50.32	868.78	12/21/87	50.06	869.04	01/30/88	49.99	869.11	03/10/88	50.02	869.08
11/13/87	50.26	868.84	12/22/87	50.07	869.03	01/30/88	49.98	869.12	03/10/88	50.03	869.07
11/14/87	50.32	868.78	12/22/87	50.05	869.05	01/31/88	49.98	869.12	03/11/88	49.99	869.11
11/14/87	50.34	868.76	12/23/87	50.13	868.97	01/31/88	50.11	868.99	03/11/88	50.02	869.08

137-049-27BBC **(Continued)** MP Elev (msl,ft)=919.1

Horace Aquifer SI (ft.)=249-300

Date	Depth to Water (ft)	WL Elev (msl, ft)
03/12/88	50.06	869.04
03/12/88	49.99	869.11
03/13/88	50.06	869.04
03/13/88	50.11	868.99
03/14/88	50.11	868.99
03/14/88	50.11	868.99
03/15/88	50.11	868.99
03/15/88	50.14	868.96
03/16/88	50.17	868.93
03/16/88	50.14	868.96
03/17/88	50.16	868.94
03/17/88	50.19	868.91
03/18/88	50.14	868.96
03/18/88	50.16	868.94
03/19/88	50.14	868.96
03/19/88	50.10	869.00
03/20/88	50.14	868.96
03/20/88	50.11	868.99
03/21/88	50.09	869.01
03/21/88	50.14	868.96
03/22/88	50.08	869.02
03/22/88	50.09	869.01
03/23/88	50.10	869.00
03/23/88	50.05	869.05
03/24/88	49.98	869.12
03/24/88	50.05	869.05
03/25/88	49.95	869.15
03/25/88	50.03	869.07
03/26/88	50.12	868.98
03/26/88	50.03	869.07
03/27/88	50.12	868.98
03/27/88	50.04	869.06
03/28/88	50.05	869.05
03/28/88	50.10	869.00
03/29/88	50.10	869.00
03/29/88	50.13	868.97
03/30/88	50.18	868.92
03/30/88	50.22	868.88
03/30/88	50.13	868.97
03/31/88	50.25	868.85
03/31/88	50.22	868.88
04/01/88	50.24	868.86
04/01/88	50.19	868.91
04/02/88	50.19	868.91
04/02/88	50.32	868.78
04/02/88	50.12	868.98
04/03/88	50.08	869.02
04/03/88	50.12	868.98
04/04/88	50.05	869.05
04/04/88	50.10	869.00
04/05/88	50.15	868.95
04/05/88	50.10	869.00
04/06/88	50.14	868.96
04/06/88	50.16	868.94
04/07/88	50.14	868.96
04/07/88	50.10	869.00
04/08/88	50.18	868.92
04/08/88	50.07	869.03
04/09/88	50.18	868.92
04/09/88	50.26	868.84
04/10/88	50.25	868.85
04/10/88	50.26	868.84
04/11/88	50.25	868.85
04/11/88	50.22	868.88
04/12/88	50.20	868.90
04/12/88	50.22	868.88
04/13/88	50.21	868.89
04/13/88	50.25	868.85
04/14/88	50.25	868.85
04/14/88	50.27	868.83
04/15/88	50.26	868.84
04/15/88	50.40	868.70
04/16/88	50.21	868.89
04/16/88	50.35	868.75
04/17/88	50.22	868.88
04/17/88	50.27	868.83
04/18/88	50.25	868.85
04/18/88	50.28	868.82
04/19/88	50.28	868.82
04/19/88	50.43	868.67
04/20/88	50.35	868.75
04/20/88	50.40	868.70
04/21/88	50.32	868.78
04/21/88	50.37	868.73
04/22/88	50.29	868.81
04/22/88	50.32	868.78
04/23/88	50.28	868.82
04/23/88	50.29	868.81
04/24/88	50.23	868.87
04/24/88	50.28	868.82
04/25/88	50.27	868.83
04/25/88	50.29	868.81
04/26/88	50.30	868.80
04/26/88	50.29	868.81
04/27/88	50.51	868.59
04/27/88	50.29	868.81
04/28/88	50.55	868.55
04/28/88	50.40	868.70
04/29/88	50.52	868.58
04/29/88	50.35	868.75
04/30/88	50.35	868.75
04/30/88	50.51	868.59
04/30/88	50.30	868.80
05/01/88	50.31	868.79
05/01/88	50.28	868.82
05/02/88	50.31	868.79
05/02/88	50.29	868.81
05/03/88	50.44	868.66
05/03/88	50.31	868.79
05/04/88	50.59	868.51
05/04/88	50.37	868.73
05/05/88	50.65	868.45
05/05/88	50.42	868.68
05/06/88	50.42	868.68
05/06/88	50.31	868.79
05/07/88	50.21	868.89
05/07/88	50.31	868.79
05/08/88	50.20	868.90
05/08/88	50.23	868.87
05/09/88	50.30	868.80
05/09/88	50.22	868.88
05/10/88	50.39	868.71
05/10/88	50.30	868.80
05/11/88	50.39	868.71
05/11/88	50.37	868.73
05/12/88	50.33	868.77
05/12/88	50.42	868.68
05/13/88	50.52	868.58
05/13/88	50.40	868.70
05/14/88	50.32	868.78
05/14/88	50.40	868.70
05/15/88	50.32	868.78
05/15/88	50.41	868.69
05/16/88	50.41	868.69
05/16/88	50.52	868.58
05/17/88	50.41	868.69
05/17/88	50.54	868.56
05/18/88	50.50	868.60
05/18/88	50.39	868.71
05/19/88	50.52	868.58
05/19/88	50.43	868.67
05/20/88	50.46	868.64
05/20/88	50.48	868.62
05/21/88	50.45	868.65
05/21/88	50.47	868.63
05/22/88	50.45	868.65
05/22/88	50.48	868.62
05/23/88	50.47	868.63
05/23/88	50.47	868.63
05/24/88	50.47	868.63
05/24/88	50.49	868.61
05/25/88	50.49	868.61
05/25/88	50.45	868.65
05/26/88	50.62	868.48
05/26/88	50.43	868.67
05/27/88	50.43	868.67
05/27/88	50.65	868.45
05/27/88	50.44	868.66
05/28/88	50.54	868.56
05/28/88	50.42	868.68
05/29/88	50.45	868.65
05/29/88	50.42	868.68
05/30/88	50.44	868.66
05/30/88	50.47	868.63
05/31/88	50.47	868.63
05/31/88	50.51	868.59
06/01/88	50.74	868.36
06/01/88	50.50	868.60
06/02/88	50.59	868.51
06/02/88	50.74	868.36
06/03/88	50.65	868.45
06/03/88	50.77	868.33
06/04/88	50.76	868.34
06/04/88	50.67	868.43
06/05/88	50.70	868.40
06/05/88	50.66	868.44
06/06/88	50.83	868.27
06/06/88	50.66	868.44
06/07/88	50.89	868.21
06/07/88	50.71	868.39
06/08/88	50.90	868.20
06/08/88	50.77	868.33
06/09/88	50.79	868.31
06/09/88	50.88	868.22
06/10/88	50.83	868.27
06/10/88	50.94	868.16
06/11/88	50.87	868.23
06/11/88	50.79	868.31
06/12/88	50.79	868.31
06/12/88	50.84	868.26
06/13/88	50.78	868.32
06/13/88	50.84	868.26
06/14/88	50.82	868.28
06/14/88	50.73	868.37
06/15/88	50.83	868.27
06/15/88	50.79	868.31
06/16/88	50.83	868.27
06/16/88	50.97	868.13
06/17/88	50.85	868.25
06/17/88	50.80	868.30
06/18/88	50.75	868.35
06/18/88	50.80	868.30
06/19/88	50.76	868.34
06/19/88	50.94	868.16
06/20/88	50.88	868.22
06/20/88	51.09	868.01
06/21/88	50.88	868.22
06/21/88	50.81	868.29
06/22/88	50.83	868.27
06/22/88	50.90	868.20
06/23/88	50.85	868.25
06/23/88	50.91	868.19
06/24/88	50.84	868.26
06/24/88	50.86	868.24
06/24/88	51.08	868.02
06/25/88	51.11	867.99
06/25/88	50.87	868.23
06/26/88	51.13	867.97
06/26/88	51.00	868.10
06/27/88	50.94	868.16
06/27/88	51.02	868.08
06/27/88	51.10	868.00
06/28/88	50.92	868.18
06/28/88	51.13	867.97
06/29/88	51.00	868.10
06/29/88	51.15	867.95
06/30/88	51.14	867.96
06/30/88	51.28	867.82
07/01/88	51.23	867.87
07/01/88	51.12	867.98
07/02/88	51.32	867.78
07/02/88	51.11	867.99
07/03/88	51.13	867.97
07/03/88	51.09	868.01
07/04/88	51.08	868.02
07/04/88	51.11	867.99
07/05/88	51.08	868.02
07/05/88	51.09	868.01
07/06/88	51.08	868.02
07/06/88	51.10	868.00
07/07/88	51.14	867.96
07/07/88	51.08	868.02
07/08/88	51.14	867.96
07/08/88	51.40	867.70
07/09/88	51.31	867.79
07/09/88	51.19	867.91
07/10/88	51.19	867.91
07/10/88	51.21	867.89
07/11/88	51.25	867.85
07/11/88	51.20	867.90
07/12/88	51.11	867.99
07/12/88	51.22	867.88
07/13/88	51.14	867.96
07/13/88	51.11	867.99
07/14/88	51.17	867.93
07/14/88	51.13	867.97
07/15/88	51.12	867.98
07/15/88	51.18	867.92
07/16/88	51.18	867.92
07/16/88	51.38	867.72
07/17/88	51.32	867.78
07/17/88	51.46	867.64
07/18/88	51.29	867.81
07/18/88	51.32	867.78
07/19/88	51.50	867.60
07/19/88	51.29	867.81
07/20/88	51.40	867.70
07/20/88	51.35	867.75
07/21/88	51.34	867.76
07/21/88	51.35	867.75
07/22/88	51.47	867.63
07/22/88	51.34	867.76
07/22/88	51.57	867.53
07/23/88	51.44	867.66
07/23/88	51.32	867.78
07/24/88	51.32	867.78
07/24/88	51.35	867.75
07/25/88	51.35	867.75
07/25/88	51.39	867.71
07/26/88	51.42	867.68
07/26/88	51.36	867.74
07/27/88	51.58	867.52
07/27/88	51.38	867.72
07/28/88	51.38	867.72
07/28/88	51.51	867.59
07/29/88	51.38	867.72
07/29/88	51.42	867.68
07/30/88	51.50	867.60
07/30/88	51.42	867.68
07/31/88	51.39	867.71
07/31/88	51.59	867.51
08/01/88	51.51	867.59
08/01/88	51.37	867.73
08/02/88	51.35	867.75
08/02/88	51.38	867.72
08/03/88	51.41	867.69
08/03/88	51.38	867.72
08/03/88	51.42	867.68
08/04/88	51.41	867.69
08/04/88	51.43	867.67
08/05/88	51.40	867.70
08/05/88	51.43	867.67
08/06/88	51.38	867.72
08/06/88	51.41	867.69
08/07/88	51.51	867.59
08/07/88	51.36	867.74
08/08/88	51.48	867.62
08/08/88	51.43	867.67
08/09/88	51.48	867.62
08/09/88	51.45	867.65
08/10/88	51.45	867.65
08/10/88	51.61	867.49
08/11/88	51.47	867.63
08/11/88	51.62	867.48
08/12/88	51.48	867.62
08/12/88	51.70	867.40
08/13/88	51.50	867.60
08/13/88	51.60	867.50
08/14/88	51.50	867.60
08/14/88	51.57	867.53

137-049-27BBC **(Continued)** MP Elev (msl,ft)=919.1

Horace Aquifer SI (ft.)=249-300

Date	Depth to Water (ft)	WL Elev (msl, ft)	Date	Depth to Water (ft)	WL Elev (msl, ft)	Date	Depth to Water (ft)	WL Elev (msl, ft)	Date	Depth to Water (ft)	WL Elev (msl, ft)
08/15/88	51.61	867.49	09/22/88	51.78	867.32	11/01/88	51.94	867.16	12/10/88	52.08	867.02
08/15/88	51.49	867.61	09/23/88	51.80	867.30	11/01/88	51.92	867.18	12/10/88	52.00	867.10
08/16/88	51.55	867.55	09/23/88	51.78	867.32	11/02/88	51.92	867.18	12/10/88	51.99	867.11
08/16/88	51.48	867.62	09/24/88	51.77	867.33	11/02/88	51.85	867.25	12/11/88	51.99	867.11
08/17/88	51.55	867.55	09/24/88	51.81	867.29	11/03/88	51.81	867.29	12/11/88	51.95	867.15
08/17/88	51.48	867.62	09/25/88	51.81	867.29	11/03/88	51.84	867.26	12/12/88	51.94	867.16
08/18/88	51.55	867.55	09/25/88	51.85	867.25	11/04/88	51.80	867.30	12/12/88	51.82	867.28
08/18/88	51.58	867.52	09/26/88	51.82	867.28	11/04/88	51.83	867.27	12/13/88	51.84	867.26
08/19/88	51.56	867.54	09/26/88	51.85	867.25	11/05/88	51.83	867.27	12/13/88	51.74	867.36
08/19/88	51.59	867.51	09/27/88	51.86	867.24	11/05/88	51.88	867.22	12/14/88	51.76	867.34
08/20/88	51.67	867.43	09/27/88	51.89	867.21	11/05/88	52.00	867.10	12/14/88	51.98	867.12
08/20/88	51.56	867.54	09/28/88	51.86	867.24	11/06/88	51.85	867.25	12/15/88	51.94	867.16
08/20/88	51.52	867.58	09/28/88	51.89	867.21	11/06/88	51.88	867.22	12/15/88	52.03	867.07
08/21/88	51.55	867.55	09/29/88	51.86	867.24	11/07/88	51.84	867.26	12/16/88	51.89	867.21
08/21/88	51.69	867.41	09/29/88	51.86	867.24	11/07/88	51.85	867.25	12/16/88	51.93	867.17
08/22/88	51.76	867.34	09/30/88	51.82	867.28	11/08/88	51.85	867.25	12/17/88	51.89	867.21
08/22/88	51.56	867.54	09/30/88	51.86	867.24	11/08/88	51.88	867.22	12/17/88	51.95	867.15
08/23/88	51.62	867.48	10/01/88	51.83	867.27	11/09/88	51.86	867.24	12/18/88	51.87	867.23
08/23/88	51.59	867.51	10/01/88	51.87	867.23	11/09/88	51.91	867.19	12/18/88	51.79	867.31
08/24/88	51.59	867.51	10/02/88	51.87	867.23	11/10/88	51.94	867.16	12/19/88	51.78	867.32
08/24/88	51.63	867.47	10/02/88	51.90	867.20	11/10/88	51.91	867.19	12/19/88	51.74	867.36
08/25/88	51.59	867.51	10/03/88	51.90	867.20	11/11/88	51.95	867.15	12/20/88	51.75	867.35
08/25/88	51.64	867.46	10/03/88	51.97	867.13	11/11/88	51.88	867.22	12/20/88	51.87	867.23
08/26/88	51.62	867.48	10/04/88	52.01	867.09	11/12/88	51.88	867.22	12/21/88	51.85	867.25
08/26/88	51.78	867.32	10/04/88	51.97	867.13	11/12/88	51.82	867.28	12/21/88	51.88	867.22
08/27/88	51.79	867.31	10/05/88	52.00	867.10	11/13/88	51.81	867.29	12/22/88	51.74	867.36
08/27/88	51.68	867.42	10/05/88	51.99	867.11	11/13/88	51.86	867.24	12/22/88	51.86	867.24
08/28/88	51.83	867.27	10/06/88	51.99	867.11	11/14/88	51.89	867.21	12/23/88	51.83	867.27
08/28/88	51.69	867.41	10/06/88	51.99	867.11	11/14/88	51.87	867.23	12/23/88	51.74	867.36
08/29/88	51.75	867.35	10/07/88	51.95	867.15	11/15/88	51.88	867.22	12/24/88	51.83	867.27
08/29/88	51.76	867.34	10/07/88	51.99	867.11	11/15/88	51.78	867.32	12/24/88	51.92	867.18
08/30/88	51.71	867.39	10/08/88	51.92	867.18	11/16/88	51.82	867.28	12/25/88	51.92	867.18
08/30/88	51.84	867.26	10/08/88	51.95	867.15	11/16/88	51.78	867.32	12/25/88	51.98	867.12
08/31/88	51.70	867.40	10/09/88	51.92	867.18	11/17/88	51.82	867.28	12/26/88	51.98	867.12
08/31/88	51.67	867.43	10/09/88	51.89	867.21	11/17/88	51.91	867.19	12/26/88	51.79	867.31
09/01/88	51.77	867.33	10/10/88	51.93	867.17	11/18/88	51.93	867.17	12/27/88	51.78	867.32
09/01/88	51.67	867.43	10/10/88	51.89	867.21	11/18/88	51.92	867.18	12/27/88	51.84	867.26
09/02/88	51.74	867.36	10/11/88	51.93	867.17	11/19/88	51.93	867.17	12/28/88	51.84	867.26
09/02/88	51.76	867.34	10/11/88	51.96	867.14	11/19/88	51.90	867.20	12/28/88	51.90	867.20
09/03/88	51.76	867.34	10/12/88	51.96	867.14	11/20/88	51.94	867.16	12/29/88	51.82	867.28
09/03/88	51.89	867.21	10/12/88	51.96	867.14	11/20/88	51.93	867.17	12/29/88	51.90	867.20
09/04/88	51.80	867.30	10/13/88	51.89	867.21	11/21/88	51.94	867.16	12/30/88	51.82	867.28
09/04/88	51.82	867.28	10/13/88	51.96	867.14	11/21/88	51.91	867.19	12/30/88	51.84	867.26
09/05/88	51.80	867.30	10/14/88	51.85	867.25	11/22/88	51.89	867.21	12/31/88	51.83	867.27
09/05/88	52.01	867.09	10/14/88	51.89	867.21	11/22/88	51.91	867.19	12/31/88	51.85	867.25
09/06/88	51.88	867.22	10/15/88	52.05	867.05	11/23/88	51.81	867.29			
09/06/88	51.79	867.31	10/15/88	51.82	867.28	11/23/88	51.89	867.21	01/01/89	51.86	867.24
09/07/88	51.78	867.32	10/15/88	51.85	867.25	11/23/88	51.84	867.26	01/01/89	51.83	867.27
09/07/88	51.71	867.39	10/16/88	51.84	867.26	11/24/88	51.75	867.35	01/02/89	51.86	867.24
09/08/88	51.80	867.30	10/16/88	51.82	867.28	11/24/88	51.81	867.29	01/02/89	51.80	867.30
09/08/88	51.80	867.30	10/17/88	51.84	867.26	11/25/88	51.78	867.32	01/03/89	51.86	867.24
09/08/88	51.72	867.38	10/17/88	51.88	867.22	11/25/88	51.82	867.28	01/03/89	51.79	867.31
09/09/88	51.76	867.32	10/18/88	51.91	867.19	11/26/88	51.82	867.28	01/04/89	51.86	867.24
09/09/88	51.92	867.18	10/18/88	51.88	867.22	11/26/88	51.78	867.32	01/04/89	51.80	867.30
09/10/88	51.85	867.25	10/19/88	51.94	867.16	11/27/88	51.78	867.32	01/05/89	51.80	867.30
09/10/88	51.78	867.32	10/19/88	51.92	867.18	11/27/88	51.86	867.24	01/05/89	51.82	867.28
09/11/88	51.76	867.34	10/20/88	51.85	867.25	11/28/88	51.82	867.28	01/06/89	51.82	867.28
09/11/88	51.92	867.18	10/20/88	51.93	867.17	11/28/88	51.87	867.23	01/06/89	51.76	867.34
09/12/88	51.86	867.24	10/21/88	51.85	867.25	11/29/88	51.82	867.28	01/07/89	51.75	867.35
09/12/88	51.92	867.18	10/21/88	51.92	867.18	11/29/88	51.85	867.25	01/07/89	51.67	867.43
09/13/88	51.92	867.18	10/22/88	51.91	867.19	11/30/88	51.85	867.25	01/08/89	51.78	867.32
09/13/88	51.90	867.20	10/22/88	51.80	867.30	11/30/88	51.90	867.20	01/08/89	51.67	867.43
09/14/88	51.90	867.20	10/23/88	51.81	867.29	12/01/88	51.90	867.20	01/09/89	51.74	867.36
09/14/88	51.96	867.14	10/23/88	51.84	867.26	12/01/88	51.90	867.20	01/09/89	51.78	867.32
09/15/88	51.89	867.21	10/24/88	51.88	867.22	12/02/88	51.90	867.20	01/10/89	51.76	867.34
09/15/88	51.96	867.14	10/24/88	51.85	867.25	12/02/88	51.86	867.24	01/10/89	51.80	867.30
09/16/88	51.82	867.28	10/25/88	51.90	867.20	12/03/88	52.02	867.08	01/11/89	51.72	867.38
09/16/88	51.89	867.21	10/25/88	51.88	867.22	12/03/88	51.87	867.23	01/11/89	51.80	867.30
09/17/88	52.03	867.07	10/26/88	51.91	867.19	12/04/88	52.02	867.08	01/12/89	51.79	867.31
09/17/88	51.82	867.28	10/26/88	51.82	867.28	12/04/88	51.95	867.15	01/12/89	51.73	867.37
09/17/88	51.82	867.28	10/27/88	51.89	867.21	12/05/88	51.94	867.16	01/13/89	51.79	867.31
09/18/88	51.74	867.36	10/27/88	51.79	867.31	12/05/88	51.87	867.23	01/13/89	51.70	867.40
09/18/88	51.84	867.26	10/28/88	51.89	867.21	12/06/88	51.83	867.27	01/14/89	51.64	867.46
09/19/88	51.67	867.43	10/28/88	51.98	867.12	12/06/88	51.91	867.19	01/14/89	51.69	867.41
09/19/88	51.74	867.36	10/29/88	51.98	867.12	12/07/88	51.99	867.11	01/15/89	51.69	867.41
09/20/88	51.71	867.39	10/29/88	52.01	867.09	12/07/88	51.92	867.18	01/15/89	51.73	867.37
09/20/88	51.81	867.29	10/30/88	51.91	867.19	12/08/88	51.99	867.11	01/16/89	51.66	867.44
09/21/88	51.82	867.28	10/30/88	52.01	867.09	12/08/88	52.01	867.09	01/16/89	51.73	867.37
09/21/88	51.78	867.32	10/31/88	51.89	867.21	12/09/88	51.96	867.14	01/17/89	51.65	867.45
09/22/88	51.76	867.34	10/31/88	51.91	867.19	12/09/88	52.01	867.09	01/17/89	51.70	867.40

137-049-27BBC **(Continued)** MP Elev (msl,ft)=919.1

Horace Aquifer SI (ft.)=249-300

Date	Depth to Water (ft)	WL Elev (msl. ft)	Date	Depth to Water (ft)	WL Elev (msl. ft)	Date	Depth to Water (ft)	WL Elev (msl. ft)	Date	Depth to Water (ft)	WL Elev (msl. ft)
01/18/89	51.67	867.43	02/27/89	51.68	867.42	08/06/89	52.64	866.46	09/14/89	52.91	866.19
01/18/89	51.70	867.40	02/27/89	51.76	867.34	08/06/89	52.68	866.42	09/14/89	52.89	866.21
01/19/89	51.80	867.30	02/28/89	51.75	867.35	08/07/89	52.70	866.40	09/15/89	52.85	866.25
01/19/89	51.66	867.44	02/28/89	51.77	867.33	08/07/89	52.68	866.42	09/15/89	52.90	866.20
01/20/89	51.81	867.29	02/28/89	51.76	867.34	08/08/89	52.70	866.40	09/16/89	52.85	866.25
01/20/89	51.77	867.33	03/01/89	51.80	867.30	08/08/89	52.74	866.36	09/16/89	52.85	866.25
01/21/89	51.76	867.34	03/01/89	51.78	867.32	08/09/89	52.73	866.37	09/17/89	52.83	866.27
01/21/89	51.70	867.40	03/02/89	51.77	867.33	08/09/89	52.92	866.18	09/17/89	52.85	866.25
01/22/89	51.70	867.40	03/02/89	51.80	867.30	08/10/89	53.02	866.08	09/18/89	52.83	866.27
01/22/89	51.66	867.44	03/03/89	51.73	867.37	08/10/89	52.82	866.28	09/18/89	52.81	866.29
01/23/89	51.79	867.31	03/03/89	51.76	867.34	08/11/89	52.87	866.23	09/19/89	52.83	866.27
01/23/89	51.70	867.40	03/04/89	51.74	867.36	08/11/89	52.82	866.28	09/19/89	52.87	866.23
01/24/89	51.81	867.29	03/04/89	51.82	867.28	08/12/89	52.81	866.29	09/20/89	52.87	866.23
01/24/89	51.80	867.30	03/05/89	51.83	867.27	08/12/89	52.94	866.16	09/20/89	52.85	866.25
01/25/89	51.81	867.29	03/05/89	51.85	867.25	08/13/89	52.81	866.29	09/21/89	52.85	866.25
01/25/89	51.78	867.32	03/06/89	51.79	867.31	08/13/89	52.80	866.30	09/21/89	52.80	866.30
01/26/89	51.78	867.32	03/06/89	51.85	867.25	08/14/89	52.80	866.30	09/22/89	52.89	866.21
01/26/89	51.74	867.36	03/07/89	51.75	867.35	08/14/89	52.84	866.26	09/22/89	52.80	866.30
01/27/89	51.69	867.41	03/07/89	51.79	867.31	08/15/89	52.83	866.27	09/23/89	52.91	866.19
01/27/89	51.74	867.36	03/08/89	51.78	867.32	08/15/89	52.84	866.26	09/23/89	52.88	866.22
01/28/89	51.75	867.35	03/08/89	51.75	867.35	08/16/89	52.83	866.27	09/24/89	52.81	866.29
01/28/89	51.69	867.41	03/09/89	51.76	867.34	08/16/89	52.83	866.27	09/24/89	52.88	866.22
01/29/89	51.69	867.41	03/09/89	51.78	867.32	08/17/89	52.83	866.27	09/25/89	52.90	866.20
01/29/89	51.75	867.35	03/10/89	51.73	867.37	08/17/89	52.85	866.25	09/25/89	52.84	866.26
01/30/89	51.58	867.52	03/10/89	51.76	867.34	08/18/89	52.85	866.25	09/26/89	52.91	866.19
01/30/89	51.69	867.41	03/11/89	51.86	867.24	08/18/89	52.78	866.32	09/26/89	52.90	866.20
01/31/89	51.72	867.38	03/11/89	51.82	867.28	08/19/89	52.77	866.33	09/27/89	52.90	866.20
01/31/89	51.58	867.52	03/12/89	51.87	867.23	08/19/89	52.77	866.33	09/27/89	52.84	866.26
02/01/89	51.83	867.27	03/12/89	51.82	867.28	08/20/89	52.78	866.32	09/28/89	52.84	866.26
02/01/89	51.73	867.37	03/13/89	51.82	867.28	08/20/89	52.79	866.31	09/28/89	52.86	866.24
02/02/89	51.92	867.18	03/13/89	51.75	867.35	08/21/89	52.76	866.34	09/29/89	52.84	866.26
02/02/89	51.83	867.27	03/14/89	51.74	867.36	08/21/89	52.79	866.31	09/29/89	52.87	866.23
02/03/89	51.93	867.17	03/14/89	51.69	867.41	08/22/89	52.78	866.32	09/30/89	52.75	866.35
02/03/89	51.92	867.18	03/15/89	51.75	867.35	08/22/89	52.76	866.34	09/30/89	54.28	864.82
02/04/89	51.89	867.21	03/15/89	51.74	867.36	08/23/89	52.80	866.30	09/30/89	52.84	866.26
02/04/89	51.93	867.17	03/16/89	51.82	867.28	08/23/89	52.78	866.32	10/01/89	52.81	866.29
02/05/89	51.80	867.30	03/16/89	51.75	867.35	08/24/89	52.83	866.27	10/01/89	52.71	866.39
02/05/89	51.89	867.21	03/17/89	51.84	867.26	08/24/89	52.80	866.30	10/02/89	52.82	866.28
02/06/89	51.79	867.31	03/17/89	51.82	867.28	08/24/89	52.84	866.26	10/02/89	52.90	866.20
02/06/89	51.80	867.30	03/18/89	51.81	867.29	08/25/89	52.94	866.16	10/03/89	52.90	866.20
02/07/89	51.71	867.39	03/18/89	51.86	867.24	08/25/89	52.84	866.26	10/03/89	52.92	866.18
02/07/89	51.79	867.31	03/19/89	51.81	867.29	08/26/89	52.84	866.26	10/04/89	52.85	866.25
02/08/89	51.87	867.23	03/19/89	51.88	867.22	08/26/89	52.86	866.24	10/04/89	52.92	866.18
02/08/89	51.80	867.30	04/22/89	51.73	867.37	08/27/89	52.85	866.25	10/05/89	52.80	866.30
02/09/89	51.87	867.23	05/12/89	52.08	867.02	08/27/89	52.88	866.22	10/05/89	52.85	866.25
02/09/89	51.78	867.32	06/03/89	52.05	867.05	08/28/89	52.80	866.30	10/06/89	52.89	866.21
02/10/89	51.80	867.30	07/20/89	52.49	866.61	08/28/89	52.88	866.22	10/06/89	52.82	866.28
02/10/89	51.74	867.36	07/21/89	52.48	866.62	08/29/89	52.84	866.26	10/07/89	52.89	866.21
02/11/89	51.76	867.34	07/21/89	52.63	866.47	08/29/89	52.80	866.30	10/07/89	52.90	866.20
02/11/89	51.75	867.35	07/22/89	52.56	866.54	08/30/89	52.81	866.29	10/08/89	52.89	866.21
02/12/89	51.66	867.44	07/22/89	52.75	866.35	08/30/89	52.84	866.26	10/08/89	52.89	866.21
02/12/89	51.76	867.34	07/23/89	52.67	866.43	08/31/89	52.73	866.37	10/09/89	52.83	866.27
02/13/89	51.65	867.45	07/23/89	52.62	866.48	08/31/89	52.80	866.30	10/09/89	52.89	866.21
02/13/89	51.71	867.39	07/24/89	52.62	866.48	09/01/89	52.75	866.35	10/10/89	52.84	866.26
02/14/89	51.71	867.39	07/24/89	52.59	866.51	09/01/89	52.81	866.29	10/10/89	52.78	866.32
02/14/89	51.79	867.31	07/25/89	52.58	866.52	09/02/89	52.83	866.27	10/11/89	52.79	866.31
02/15/89	51.79	867.31	07/25/89	52.59	866.51	09/02/89	52.81	866.29	10/11/89	52.74	866.36
02/15/89	51.92	867.18	07/26/89	52.65	866.45	09/03/89	52.82	866.28	10/12/89	52.82	866.28
02/16/89	51.97	867.13	07/26/89	52.58	866.52	09/03/89	52.78	866.32	10/12/89	52.79	866.31
02/16/89	51.92	867.18	07/27/89	52.68	866.42	09/04/89	52.79	866.31	10/13/89	52.82	866.28
02/17/89	51.98	867.12	07/27/89	52.62	866.48	09/04/89	52.78	866.32	10/13/89	52.83	866.27
02/17/89	51.97	867.13	07/28/89	52.70	866.40	09/05/89	52.79	866.31	10/14/89	52.83	866.27
02/18/89	51.97	867.13	07/28/89	52.58	866.52	09/05/89	52.79	866.31	10/14/89	52.83	866.27
02/18/89	51.86	867.24	07/29/89	52.58	866.52	09/06/89	52.79	866.31	10/15/89	52.83	866.27
02/19/89	51.85	867.25	07/29/89	52.56	866.54	09/06/89	52.78	866.32	10/15/89	52.91	866.19
02/19/89	51.77	867.33	07/30/89	52.59	866.51	09/07/89	52.79	866.31	10/16/89	52.94	866.16
02/20/89	51.77	867.33	07/30/89	52.56	866.54	09/07/89	52.78	866.32	10/16/89	52.91	866.19
02/20/89	51.73	867.37	07/30/89	54.48	864.62	09/08/89	52.79	866.31	10/17/89	53.01	866.09
02/21/89	51.83	867.27	07/31/89	52.62	866.48	09/08/89	52.81	866.29	10/17/89	52.94	866.16
02/21/89	51.73	867.37	07/31/89	52.59	866.51	09/09/89	52.81	866.29	10/18/89	53.05	866.05
02/22/89	51.93	867.17	08/01/89	52.61	866.49	09/09/89	52.83	866.27	10/18/89	53.02	866.08
02/22/89	51.84	867.26	08/01/89	52.60	866.50	09/10/89	52.88	866.22	10/18/89	53.04	866.06
02/23/89	51.80	867.30	08/02/89	52.57	866.53	09/10/89	54.38	864.72	10/19/89	52.98	866.12
02/23/89	51.92	867.18	08/02/89	52.64	866.46	09/10/89	52.83	866.27	10/19/89	53.04	866.06
02/24/89	51.80	867.30	08/03/89	52.56	866.54	09/11/89	52.89	866.21	10/20/89	52.90	866.20
02/24/89	51.77	867.33	08/03/89	52.62	866.48	09/11/89	52.87	866.23	10/20/89	52.98	866.12
02/25/89	51.78	867.32	08/04/89	52.56	866.54	09/12/89	52.94	866.16	10/21/89	52.87	866.23
02/25/89	51.76	867.34	08/04/89	52.55	866.55	09/12/89	52.89	866.21	10/21/89	52.90	866.20
02/26/89	51.76	867.34	08/05/89	52.55	866.55	09/13/89	52.93	866.17	10/22/89	52.87	866.23
02/26/89	51.79	867.31	08/05/89	52.63	866.47	09/13/89	52.91	866.19	10/22/89	52.87	866.23

137-049-27BBC **(Continued)** MP Elev (msl,ft)=919.1

Horace Aquifer SI (ft.)=249-300

Date	Depth to Water (ft)	WL Elev (msl, ft)	Date	Depth to Water (ft)	WL Elev (msl, ft)	Date	Depth to Water (ft)	WL Elev (msl, ft)	Date	Depth to Water (ft)	WL Elev (msl, ft)
10/23/89	52.91	866.19	12/30/89	52.79	866.31	02/07/90	52.63	866.47	03/19/90	52.51	866.59
10/23/89	52.87	866.23	12/31/89	52.80	866.30	02/08/90	52.59	866.51	03/19/90	52.49	866.61
10/24/89	52.91	866.19	12/31/89	52.78	866.32	02/08/90	52.63	866.47	03/20/90	52.49	866.61
10/24/89	52.91	866.19				02/09/90	52.60	866.50	03/20/90	52.49	866.61
10/25/89	52.90	866.20	01/01/90	52.80	866.30	02/09/90	52.57	866.53	03/21/90	52.46	866.64
10/25/89	52.91	866.19	01/01/90	52.76	866.34	02/10/90	52.60	866.50	03/21/90	52.49	866.61
10/26/89	52.87	866.23	01/02/90	52.72	866.38	02/10/90	52.61	866.49	03/22/90	52.46	866.64
10/26/89	52.90	866.20	01/02/90	52.76	866.34	02/11/90	52.60	866.50	03/22/90	52.58	866.52
10/27/89	52.85	866.25	01/03/90	52.71	866.39	02/11/90	52.62	866.48	03/23/90	52.58	866.52
10/27/89	52.89	866.21	01/03/90	52.72	866.38	02/12/90	52.64	866.46	03/23/90	52.59	866.51
10/28/89	52.89	866.21	01/04/90	52.72	866.38	02/12/90	52.54	866.56	03/24/90	52.59	866.51
10/28/89	54.49	864.61	01/04/90	52.75	866.35	02/13/90	52.72	866.38	03/24/90	52.54	866.56
10/28/89	52.90	866.20	01/05/90	52.74	866.36	02/13/90	52.65	866.45	03/25/90	52.52	866.58
10/29/89	52.90	866.20	01/05/90	52.78	866.32	02/14/90	52.72	866.38	03/25/90	52.59	866.51
10/29/89	52.92	866.18	01/06/90	52.78	866.32	02/14/90	52.73	866.37	03/26/90	52.60	866.50
10/30/89	52.90	866.20	01/06/90	52.70	866.40	02/15/90	52.65	866.45	03/26/90	52.58	866.52
10/30/89	52.92	866.18	01/07/90	52.66	866.44	02/15/90	52.72	866.38	03/27/90	52.58	866.52
10/31/89	52.90	866.20	01/07/90	52.70	866.40	02/16/90	52.64	866.46	03/27/90	52.54	866.56
10/31/89	52.97	866.13	01/08/90	52.65	866.45	02/16/90	52.69	866.41	03/28/90	52.54	866.56
11/19/89	54.46	864.64	01/08/90	52.62	866.48	02/17/90	52.64	866.46	03/28/90	52.54	866.56
11/30/89	52.89	866.21	01/09/90	52.69	866.41	02/17/90	52.69	866.41	03/29/90	52.54	866.56
12/01/89	52.88	866.22	01/09/90	52.64	866.46	02/18/90	52.68	866.42	03/29/90	52.53	866.57
12/01/89	52.91	866.19	01/10/90	52.69	866.41	02/18/90	52.63	866.47	03/30/90	52.53	866.57
12/02/89	52.97	866.13	01/10/90	52.58	866.52	02/19/90	52.71	866.39	03/30/90	52.50	866.60
12/02/89	52.91	866.19	01/11/90	52.75	866.35	02/19/90	52.68	866.42	03/31/90	52.51	866.59
12/03/89	52.97	866.13	01/11/90	52.63	866.47	02/20/90	52.71	866.39	03/31/90	52.50	866.60
12/03/89	52.81	866.29	01/12/90	52.76	866.34	02/20/90	52.63	866.47	04/01/90	52.57	866.53
12/04/89	52.78	866.32	01/12/90	52.80	866.30	02/21/90	52.59	866.51	04/01/90	52.49	866.61
12/04/89	52.81	866.29	01/13/90	52.71	866.39	02/21/90	52.62	866.48	04/02/90	52.58	866.52
12/05/89	52.78	866.32	01/13/90	52.80	866.30	02/22/90	52.60	866.50	04/02/90	52.57	866.53
12/05/89	52.83	866.27	01/14/90	52.71	866.39	02/22/90	52.60	866.50	04/03/90	52.51	866.59
12/06/89	52.83	866.27	01/14/90	52.70	866.40	02/23/90	52.65	866.45	04/03/90	52.58	866.52
12/06/89	52.91	866.19	01/15/90	52.75	866.35	02/23/90	52.56	866.54	04/04/90	52.52	866.58
12/07/89	52.92	866.18	01/15/90	52.71	866.39	02/24/90	52.66	866.44	04/04/90	52.54	866.56
12/07/89	52.94	866.16	01/16/90	52.75	866.35	02/24/90	52.73	866.37	04/05/90	52.53	866.57
12/08/89	52.81	866.29	01/16/90	52.74	866.36	02/25/90	52.74	866.36	04/05/90	52.55	866.55
12/08/89	52.93	866.17	01/17/90	52.76	866.34	02/25/90	52.69	866.41	04/06/90	52.55	866.55
12/09/89	52.79	866.31	01/17/90	52.74	866.36	02/26/90	52.70	866.40	04/06/90	52.54	866.56
12/09/89	52.84	866.26	01/18/90	52.76	866.34	02/26/90	52.64	866.46	04/07/90	52.53	866.57
12/10/89	52.91	866.19	01/18/90	52.77	866.33	02/27/90	52.71	866.39	04/07/90	52.55	866.55
12/10/89	52.84	866.26	01/19/90	52.77	866.33	02/27/90	52.74	866.36	04/08/90	52.50	866.60
12/11/89	52.90	866.20	01/19/90	52.75	866.35	02/28/90	52.75	866.35	04/08/90	52.54	866.56
12/11/89	52.91	866.19	01/20/90	52.72	866.38	02/28/90	52.72	866.38	04/09/90	52.54	866.56
12/12/89	52.83	866.27	01/20/90	52.75	866.35	03/01/90	52.72	866.38	04/09/90	52.50	866.60
12/12/89	52.89	866.21	01/21/90	52.65	866.45	03/01/90	52.65	866.45	04/10/90	52.60	866.50
12/13/89	52.88	866.22	01/21/90	52.72	866.38	03/02/90	52.68	866.42	04/10/90	52.56	866.54
12/13/89	52.86	866.24	01/22/90	52.65	866.45	03/02/90	52.65	866.45	04/11/90	52.60	866.50
12/14/89	52.88	866.22	01/22/90	52.66	866.44	03/03/90	52.63	866.47	04/11/90	52.60	866.50
12/14/89	52.92	866.18	01/23/90	52.66	866.44	03/03/90	52.68	866.42	04/12/90	52.55	866.55
12/15/89	52.92	866.18	01/23/90	52.57	866.53	03/04/90	52.65	866.45	04/12/90	52.60	866.50
12/15/89	52.92	866.18	01/23/90	52.60	866.50	03/04/90	52.61	866.49	04/13/90	52.55	866.55
12/16/89	52.91	866.19	01/24/90	52.59	866.51	03/05/90	52.69	866.41	04/13/90	52.55	866.55
12/16/89	52.92	866.18	01/24/90	52.66	866.44	03/05/90	52.65	866.45	04/14/90	52.54	866.56
12/17/89	52.90	866.20	01/25/90	52.66	866.44	03/06/90	52.69	866.41	04/14/90	52.49	866.61
12/17/89	52.91	866.19	01/25/90	52.65	866.45	03/06/90	52.71	866.39	04/15/90	52.52	866.58
12/18/89	52.90	866.20	01/26/90	52.64	866.46	03/07/90	52.70	866.40	04/15/90	52.49	866.61
12/18/89	52.91	866.19	01/26/90	52.57	866.53	03/07/90	52.71	866.39	04/16/90	52.54	866.56
12/19/89	52.91	866.19	01/27/90	52.63	866.47	03/08/90	52.69	866.41	04/16/90	52.49	866.61
12/19/89	52.91	866.19	01/27/90	52.58	866.52	03/08/90	52.62	866.48	04/17/90	52.56	866.54
12/20/89	52.91	866.19	01/28/90	52.63	866.47	03/09/90	52.62	866.48	04/17/90	52.54	866.56
12/20/89	52.97	866.13	01/28/90	52.63	866.47	03/09/90	52.60	866.50	04/18/90	52.51	866.59
12/21/89	53.04	866.06	01/29/90	52.63	866.47	03/10/90	52.60	866.50	04/18/90	52.56	866.54
12/21/89	52.97	866.13	01/29/90	52.54	866.56	03/10/90	52.59	866.51	04/19/90	52.49	866.61
12/22/89	53.04	866.06	01/30/90	52.66	866.44	03/11/90	52.50	866.60	04/19/90	52.50	866.60
12/22/89	53.04	866.06	01/30/90	52.58	866.52	03/11/90	52.58	866.52	04/20/90	52.54	866.56
12/23/89	53.03	866.07	01/31/90	52.66	866.44	03/12/90	52.42	866.68	04/20/90	52.50	866.60
12/23/89	52.89	866.21	01/31/90	52.66	866.44	03/12/90	52.49	866.61	04/21/90	52.52	866.58
12/24/89	52.85	866.25	02/01/90	52.66	866.44	03/12/90	52.42	866.68	04/21/90	52.54	866.56
12/24/89	52.89	866.21	02/01/90	52.71	866.39	03/13/90	52.47	866.63	04/22/90	52.55	866.55
12/25/89	52.90	866.20	02/02/90	52.71	866.39	03/13/90	52.49	866.61	04/22/90	52.59	866.51
12/25/89	52.81	866.29	02/02/90	52.71	866.39	03/14/90	52.41	866.69	04/23/90	52.52	866.58
12/26/89	52.78	866.32	02/03/90	52.71	866.39	03/14/90	52.48	866.62	04/23/90	52.56	866.54
12/26/89	52.90	866.20	02/03/90	52.68	866.42	03/15/90	52.29	866.81	04/24/90	52.53	866.57
12/27/89	52.78	866.32	02/04/90	52.68	866.42	03/15/90	52.41	866.69	04/24/90	52.53	866.57
12/27/89	52.78	866.32	02/04/90	52.66	866.44	03/16/90	52.31	866.79	04/25/90	52.49	866.61
12/28/89	52.84	866.26	02/05/90	52.67	866.43	03/16/90	52.29	866.81	04/25/90	52.61	866.49
12/28/89	52.76	866.34	02/05/90	52.65	866.45	03/17/90	52.38	866.72	04/26/90	52.51	866.59
12/29/89	52.85	866.25	02/06/90	52.67	866.43	03/17/90	52.31	866.79	04/26/90	52.55	866.55
12/29/89	52.84	866.26	02/06/90	52.65	866.45	03/18/90	52.38	866.72	04/27/90	52.52	866.58
12/30/89	52.85	866.25	02/07/90	52.65	866.45	03/18/90	52.49	866.61	04/27/90	52.45	866.65

137-049-27BBC **(Continued)** MP Elev (msl,ft)=919.1

Horace Aquifer SI (ft.)=249-300

Date	Depth to Water (ft)	WL Elev (msl. ft)	Date	Depth to Water (ft)	WL Elev (msl. ft)	Date	Depth to Water (ft)	WL Elev (msl. ft)	Date	Depth to Water (ft)	WL Elev (msl. ft)
04/28/90	52.40	866.70	06/06/90	52.48	866.62	07/15/90	52.75	866.35	08/24/90	53.28	865.82
04/28/90	52.44	866.66	06/06/90	52.47	866.63	07/16/90	52.79	866.31	08/24/90	53.29	865.81
04/29/90	52.40	866.70	06/07/90	52.49	866.61	07/16/90	52.98	866.12	08/25/90	53.26	865.84
04/29/90	52.41	866.69	06/07/90	52.46	866.64	07/17/90	52.76	866.34	08/25/90	53.29	865.81
04/30/90	52.46	866.64	06/08/90	52.46	866.64	07/17/90	52.84	866.26	08/26/90	53.24	865.86
04/30/90	52.41	866.69	06/08/90	52.47	866.63	07/18/90	52.81	866.29	08/26/90	53.25	865.85
05/01/90	52.54	866.56	06/09/90	52.56	866.54	07/18/90	52.78	866.32	08/27/90	53.24	865.86
05/01/90	52.46	866.64	06/09/90	52.48	866.62	07/19/90	52.80	866.30	08/27/90	53.24	865.86
05/02/90	52.52	866.58	06/10/90	52.57	866.53	07/19/90	52.83	866.27	08/28/90	53.24	865.86
05/02/90	52.52	866.58	06/10/90	52.55	866.55	07/20/90	52.83	866.27	08/28/90	53.24	865.86
05/03/90	52.56	866.54	06/11/90	52.46	866.64	07/20/90	52.86	866.24	08/29/90	53.24	865.86
05/03/90	52.76	866.34	06/11/90	52.55	866.55	07/21/90	52.87	866.23	08/29/90	53.24	865.86
05/03/90	52.52	866.58	06/12/90	52.44	866.66	07/21/90	52.86	866.24	08/30/90	53.24	865.86
05/04/90	52.67	866.43	06/12/90	52.46	866.64	07/22/90	52.86	866.24	08/30/90	53.22	865.88
05/04/90	52.79	866.31	06/13/90	52.67	866.43	07/22/90	52.87	866.23	08/31/90	53.43	865.67
05/05/90	52.64	866.46	06/13/90	52.44	866.66	07/23/90	52.86	866.24	08/31/90	53.21	865.89
05/05/90	52.77	866.33	06/14/90	52.59	866.51	07/23/90	52.94	866.16	09/01/90	53.50	865.60
05/06/90	52.52	866.58	06/14/90	52.60	866.50	07/24/90	52.87	866.23	09/01/90	53.35	865.75
05/06/90	52.63	866.47	06/15/90	52.56	866.54	07/24/90	52.87	866.23	09/02/90	53.43	865.67
05/07/90	52.51	866.59	06/15/90	52.60	866.50	07/25/90	52.87	866.23	09/02/90	53.38	865.72
05/07/90	52.43	866.67	06/16/90	52.56	866.54	07/25/90	52.88	866.22	09/03/90	53.34	865.76
05/08/90	52.53	866.57	06/16/90	52.52	866.58	07/26/90	52.87	866.23	09/03/90	53.38	865.72
05/08/90	52.48	866.62	06/17/90	52.50	866.60	07/26/90	52.87	866.23	09/04/90	53.38	865.72
05/09/90	52.53	866.57	06/17/90	52.52	866.58	07/27/90	52.87	866.23	09/04/90	53.34	865.76
05/09/90	52.60	866.50	06/18/90	52.52	866.58	07/27/90	52.87	866.23	09/05/90	53.38	865.72
05/10/90	52.55	866.55	06/18/90	52.56	866.54	07/28/90	52.87	866.23	09/05/90	53.31	865.79
05/10/90	52.76	866.34	06/19/90	52.55	866.55	07/28/90	53.05	866.05	09/06/90	53.31	865.79
05/11/90	52.57	866.53	06/19/90	52.48	866.62	07/29/90	52.96	866.14	09/06/90	53.30	865.80
05/11/90	52.69	866.41	06/20/90	52.48	866.62	07/29/90	53.20	865.90	09/07/90	53.29	865.81
05/12/90	52.56	866.54	06/20/90	52.50	866.60	07/30/90	53.07	866.03	09/07/90	53.33	865.77
05/12/90	52.56	866.54	06/21/90	52.50	866.60	07/30/90	53.17	865.93	09/08/90	53.30	865.80
05/13/90	52.54	866.56	06/21/90	52.54	866.56	07/31/90	53.11	865.99	09/08/90	53.31	865.79
05/13/90	52.56	866.54	06/22/90	52.65	866.45	07/31/90	53.05	866.05	09/09/90	53.31	865.79
05/14/90	52.54	866.56	06/22/90	52.53	866.57	08/01/90	53.06	866.04	09/09/90	53.30	865.80
05/14/90	52.54	866.56	06/23/90	52.58	866.52	08/01/90	52.99	866.11	09/10/90	53.33	865.77
05/15/90	52.52	866.58	06/23/90	52.60	866.50	08/02/90	52.99	866.11	09/10/90	53.32	865.78
05/15/90	52.54	866.56	06/24/90	52.58	866.52	08/02/90	53.06	866.04	09/11/90	53.31	865.79
05/16/90	52.51	866.59	06/24/90	52.58	866.52	08/03/90	53.01	866.09	09/11/90	53.33	865.77
05/16/90	52.47	866.63	06/25/90	52.59	866.51	08/03/90	53.22	865.88	09/12/90	53.33	865.77
05/17/90	52.54	866.56	06/25/90	52.58	866.52	08/04/90	53.33	865.77	09/12/90	53.30	865.80
05/17/90	52.47	866.63	06/26/90	52.59	866.51	08/04/90	53.17	865.93	09/13/90	53.30	865.80
05/18/90	52.55	866.55	06/26/90	52.60	866.50	08/05/90	53.28	865.82	09/13/90	53.46	865.64
05/18/90	52.52	866.58	06/27/90	52.61	866.49	08/05/90	53.17	865.93	09/14/90	53.38	865.72
05/19/90	52.52	866.58	06/27/90	52.54	866.56	08/06/90	53.28	865.82	09/14/90	53.54	865.56
05/19/90	52.51	866.59	06/28/90	52.54	866.56	08/06/90	53.20	865.90	09/15/90	53.36	865.74
05/20/90	52.54	866.56	06/28/90	52.52	866.58	08/07/90	53.20	865.90	09/15/90	53.38	865.72
05/20/90	52.52	866.58	06/29/90	52.53	866.57	08/07/90	53.16	865.94	09/16/90	53.40	865.70
05/21/90	52.54	866.56	06/29/90	52.59	866.51	08/08/90	53.12	865.98	09/16/90	53.38	865.72
05/21/90	52.57	866.53	06/30/90	52.63	866.47	08/08/90	53.16	865.94	09/17/90	53.41	865.69
05/22/90	52.53	866.57	06/30/90	52.59	866.51	08/09/90	53.14	865.96	09/17/90	53.40	865.70
05/22/90	52.57	866.53	07/01/90	52.65	866.45	08/09/90	53.12	865.98	09/18/90	53.41	865.69
05/23/90	52.55	866.55	07/01/90	52.60	866.50	08/10/90	53.35	865.75	09/18/90	53.35	865.75
05/23/90	52.53	866.57	07/02/90	52.62	866.48	08/10/90	53.14	865.96	09/19/90	53.35	865.75
05/24/90	52.55	866.55	07/02/90	52.58	866.52	08/11/90	53.30	865.80	09/19/90	53.35	865.75
05/24/90	52.56	866.54	07/03/90	52.55	866.55	08/11/90	53.42	865.68	09/20/90	53.35	865.75
05/25/90	52.56	866.54	07/03/90	52.66	866.44	08/12/90	53.28	865.82	09/20/90	53.34	865.76
05/25/90	52.57	866.53	07/04/90	52.64	866.46	08/12/90	53.30	865.80	09/21/90	53.34	865.76
05/26/90	52.57	866.53	07/04/90	52.66	866.44	08/13/90	53.28	865.82	09/21/90	53.34	865.76
05/26/90	52.57	866.53	07/05/90	52.94	866.16	08/13/90	53.21	865.89	09/22/90	53.34	865.76
05/27/90	52.57	866.53	07/05/90	52.66	866.44	08/14/90	53.20	865.90	09/22/90	53.39	865.71
05/27/90	52.59	866.51	07/06/90	52.93	866.17	08/14/90	53.29	865.81	09/23/90	53.36	865.74
05/28/90	52.59	866.51	07/06/90	52.71	866.39	08/15/90	53.25	865.85	09/23/90	53.40	865.70
05/28/90	52.61	866.49	07/07/90	52.71	866.39	08/15/90	53.30	865.80	09/24/90	53.36	865.74
05/29/90	52.69	866.41	07/07/90	52.67	866.43	08/16/90	53.21	865.89	09/24/90	53.27	865.83
05/29/90	52.60	866.50	07/08/90	52.73	866.37	08/16/90	53.28	865.82	09/25/90	53.29	865.81
05/30/90	52.63	866.47	07/08/90	52.67	866.43	08/17/90	53.22	865.88	09/25/90	53.27	865.83
05/30/90	52.74	866.36	07/09/90	52.73	866.37	08/17/90	53.41	865.69	09/26/90	53.31	865.79
05/31/90	52.60	866.50	07/09/90	52.96	866.14	08/18/90	53.28	865.82	09/26/90	53.29	865.81
05/31/90	52.66	866.44	07/10/90	52.84	866.26	08/18/90	53.33	865.77	09/27/90	53.37	865.73
06/01/90	52.59	866.51	07/10/90	52.85	866.25	08/19/90	53.31	865.79	09/27/90	53.31	865.79
06/01/90	52.40	866.70	07/10/90	52.83	866.27	08/19/90	53.29	865.81	09/28/90	53.41	865.69
06/02/90	52.32	866.78	07/11/90	52.83	866.27	08/20/90	53.42	865.68	09/28/90	53.37	865.73
06/02/90	52.36	866.74	07/11/90	52.78	866.32	08/20/90	53.31	865.79	09/29/90	53.41	865.69
06/03/90	52.34	866.76	07/12/90	52.83	866.27	08/21/90	53.44	865.66	09/29/90	53.45	865.65
06/03/90	52.47	866.63	07/12/90	52.79	866.31	08/21/90	53.40	865.70	09/30/90	53.44	865.66
06/04/90	52.48	866.62	07/13/90	52.83	866.27	08/22/90	53.29	865.81	09/30/90	53.38	865.72
06/04/90	52.44	866.66	07/13/90	52.82	866.28	08/22/90	53.43	865.67	10/01/90	53.40	865.70
06/05/90	52.41	866.69	07/14/90	52.82	866.28	08/22/90	53.38	865.72	10/01/90	53.39	865.71
06/05/90	52.43	866.67	07/14/90	52.77	866.33	08/23/90	53.29	865.81	10/02/90	53.26	865.84
06/06/90	52.42	866.68	07/15/90	52.89	866.21	08/23/90	53.33	865.77	10/02/90	53.39	865.71

137-049-27BBC **(Continued)** MP Elev (msl,ft)=919.1

Horace Aquifer SI (ft.)=249-300

Date	Depth to Water (ft)	WL Elev (msl, ft)	Date	Depth to Water (ft)	WL Elev (msl, ft)	Date	Depth to Water (ft)	WL Elev (msl, ft)	Date	Depth to Water (ft)	WL Elev (msl, ft)
10/03/90	53.26	865.84	11/27/90	53.41	865.69	01/05/91	53.34	865.76	02/14/91	53.57	865.53
10/03/90	53.27	865.83	11/27/90	53.41	865.69	01/06/91	53.34	865.76	02/14/91	53.48	865.62
10/04/90	53.27	865.83	11/28/90	53.31	865.79	01/06/91	53.30	865.80	02/15/91	53.53	865.57
10/04/90	53.30	865.80	11/28/90	53.41	865.69	01/07/91	53.37	865.73	02/15/91	53.45	865.65
10/05/90	53.32	865.78	11/29/90	53.31	865.79	01/07/91	53.30	865.80	02/16/91	53.58	865.52
10/05/90	53.27	865.83	11/29/90	53.37	865.73	01/08/91	53.36	865.74	02/16/91	53.53	865.57
10/06/90	53.30	865.80	11/30/90	53.36	865.74	01/08/91	53.38	865.72	02/17/91	53.57	865.53
10/06/90	53.43	865.67	11/30/90	53.42	865.68	01/08/91	53.38	865.72	02/17/91	53.56	865.54
10/07/90	53.48	865.62	12/01/90	53.36	865.74	01/09/91	53.36	865.74	02/18/91	53.55	865.55
10/07/90	53.43	865.67	12/01/90	53.30	865.80	01/09/91	53.33	865.77	02/18/91	53.56	865.54
10/08/90	53.48	865.62	12/02/90	53.30	865.80	01/10/91	53.33	865.77	02/19/91	53.56	865.54
10/08/90	53.48	865.62	12/02/90	53.30	865.80	01/10/91	53.38	865.72	02/19/91	53.60	865.50
10/09/90	53.47	865.63	12/03/90	53.31	865.79	01/11/91	53.38	865.72	02/20/91	53.62	865.48
10/09/90	53.48	865.62	12/03/90	53.30	865.80	01/11/91	53.39	865.71	02/20/91	53.60	865.50
10/10/90	53.39	865.71	12/04/90	53.31	865.79	01/12/91	53.49	865.61	02/21/91	53.62	865.48
10/10/90	53.47	865.63	12/04/90	53.41	865.69	01/12/91	53.39	865.71	02/21/91	53.53	865.57
10/11/90	53.38	865.72	12/05/90	53.39	865.71	01/13/91	53.49	865.61	02/22/91	53.47	865.63
10/11/90	53.41	865.69	12/05/90	53.46	865.64	01/13/91	53.58	865.52	02/22/91	53.53	865.57
10/12/90	53.42	865.68	12/06/90	53.39	865.71	01/14/91	53.57	865.53	02/23/91	53.48	865.62
10/12/90	53.36	865.74	12/06/90	53.42	865.68	01/14/91	53.54	865.56	02/23/91	53.55	865.55
10/13/90	53.36	865.74	12/07/90	53.44	865.66	01/15/91	53.54	865.56	02/24/91	53.54	865.56
10/13/90	53.32	865.78	12/07/90	53.42	865.68	01/15/91	53.52	865.58	02/24/91	53.48	865.62
10/14/90	53.32	865.78	12/08/90	53.44	865.66	01/16/91	53.52	865.58	02/25/91	53.48	865.62
10/14/90	53.35	865.75	12/08/90	53.44	865.66	01/16/91	53.51	865.59	02/25/91	53.50	865.60
10/15/90	53.54	865.56	12/09/90	53.39	865.71	01/17/91	53.51	865.59	02/26/91	53.50	865.60
10/15/90	53.35	865.75	12/09/90	53.44	865.66	01/17/91	53.49	865.61	02/26/91	53.56	865.54
10/16/90	53.47	865.63	12/10/90	53.41	865.69	01/18/91	53.59	865.51	02/27/91	53.59	865.51
10/16/90	53.37	865.73	12/10/90	53.39	865.71	01/18/91	53.50	865.60	02/27/91	53.56	865.54
10/17/90	53.32	865.78	12/11/90	53.41	865.69	01/19/91	53.59	865.51	02/28/91	53.59	865.51
10/17/90	53.37	865.73	12/11/90	53.46	865.64	01/19/91	53.52	865.58	02/28/91	53.67	865.43
10/18/90	53.36	865.74	12/12/90	53.41	865.69	01/20/91	53.44	865.66	03/01/91	53.66	865.44
10/18/90	53.37	865.73	12/12/90	53.47	865.63	01/20/91	53.52	865.58	03/01/91	53.69	865.41
10/19/90	53.37	865.73	12/13/90	53.37	865.73	01/21/91	53.55	865.55	03/01/91	53.69	865.41
10/19/90	53.29	865.81	12/13/90	53.41	865.69	01/21/91	53.43	865.67	03/02/91	53.60	865.50
10/20/90	53.29	865.81	12/14/90	53.39	865.71	01/22/91	53.66	865.44	03/02/91	53.66	865.44
10/20/90	53.34	865.76	12/14/90	53.43	865.67	01/22/91	53.55	865.55	03/03/91	53.65	865.45
10/21/90	53.34	865.76	12/15/90	53.43	865.67	01/23/91	53.62	865.48	03/03/91	53.60	865.50
10/21/90	53.35	865.75	12/15/90	53.43	865.67	01/23/91	53.50	865.60	03/04/91	53.74	865.36
10/22/90	53.34	865.76	12/16/90	53.43	865.67	01/24/91	53.50	865.60	03/04/91	53.65	865.45
10/22/90	53.32	865.78	12/16/90	53.46	865.64	01/24/91	53.43	865.67	03/05/91	53.83	865.27
10/23/90	53.34	865.76	12/17/90	53.44	865.66	01/25/91	53.49	865.61	03/05/91	53.74	865.36
10/23/90	53.40	865.70	12/17/90	53.46	865.64	01/25/91	53.43	865.67	03/06/91	53.77	865.33
10/24/90	53.40	865.70	12/18/90	53.46	865.64	01/26/91	53.59	865.51	03/06/91	53.65	865.45
10/24/90	53.41	865.69	12/18/90	53.51	865.59	01/26/91	53.49	865.61	03/07/91	53.65	865.45
11/09/90	53.51	865.59	12/19/90	53.44	865.66	01/27/91	53.59	865.51	03/07/91	53.66	865.44
11/10/90	53.48	865.62	12/19/90	53.48	865.62	01/27/91	53.63	865.47	03/08/91	53.67	865.43
11/10/90	53.52	865.58	12/20/90	53.41	865.69	01/28/91	53.48	865.62	03/08/91	53.61	865.49
11/11/90	53.42	865.68	12/20/90	53.44	865.66	01/28/91	53.62	865.48	03/09/91	53.60	865.50
11/11/90	53.50	865.60	12/21/90	53.40	865.70	01/29/91	53.48	865.62	03/09/91	53.61	865.49
11/12/90	53.40	865.70	12/21/90	53.41	865.69	01/29/91	53.52	865.58	03/10/91	53.60	865.50
11/12/90	53.42	865.68	12/22/90	53.41	865.69	01/30/91	53.56	865.54	03/10/91	53.63	865.47
11/13/90	53.45	865.65	12/22/90	53.42	865.68	01/30/91	53.49	865.61	03/11/91	53.65	865.45
11/13/90	53.40	865.70	12/23/90	53.42	865.68	01/31/91	53.49	865.61	03/11/91	53.63	865.47
11/14/90	53.43	865.67	12/23/90	53.46	865.64	01/31/91	53.49	865.61	03/12/91	53.62	865.48
11/14/90	53.48	865.62	12/24/90	53.46	865.64	02/01/91	53.49	865.61	03/12/91	53.65	865.45
11/15/90	53.43	865.67	12/24/90	53.49	865.61	02/01/91	53.52	865.58	03/13/91	53.59	865.51
11/15/90	53.30	865.80	12/25/90	53.40	865.70	02/02/91	53.51	865.59	03/13/91	53.62	865.48
11/16/90	53.30	865.80	12/25/90	53.46	865.64	02/02/91	53.53	865.57	03/14/91	53.59	865.51
11/16/90	53.30	865.80	12/26/90	53.38	865.72	02/03/91	53.55	865.55	03/14/91	53.57	865.53
11/17/90	53.77	865.33	12/26/90	53.40	865.70	02/03/91	53.53	865.57	03/15/91	53.55	865.55
11/17/90	53.30	865.80	12/27/90	53.51	865.59	02/04/91	53.55	865.55	03/15/91	53.57	865.53
11/17/90	53.30	865.80	12/27/90	53.40	865.70	02/04/91	53.50	865.60	03/16/91	53.55	865.55
11/18/90	53.30	865.80	12/28/90	53.51	865.59	02/05/91	53.50	865.60	03/16/91	53.55	865.55
11/18/90	53.30	865.80	12/28/90	53.47	865.63	02/05/91	53.50	865.60	03/17/91	53.55	865.55
11/19/90	53.30	865.80	12/29/90	53.39	865.71	02/06/91	53.50	865.60	03/17/91	53.58	865.52
11/19/90	53.30	865.80	12/29/90	53.47	865.63	02/06/91	53.44	865.56	03/18/91	53.58	865.52
11/20/90	53.37	865.73	12/30/90	53.39	865.71	02/07/91	53.48	865.62	03/18/91	53.60	865.50
11/20/90	53.30	865.80	12/30/90	53.40	865.70	02/07/91	53.44	865.66	03/19/91	53.60	865.50
11/21/90	53.41	865.69	12/31/90	53.44	865.66	02/08/91	53.50	865.60	03/19/91	53.65	865.45
11/21/90	53.35	865.75	12/31/90	53.40	865.70	02/08/91	53.48	865.62	03/20/91	53.72	865.38
11/22/90	53.35	865.75				02/09/91	53.45	865.65	03/20/91	53.65	865.45
11/22/90	53.39	865.71	01/01/91	53.46	865.64	02/09/91	53.48	865.62	03/21/91	53.72	865.38
11/23/90	53.35	865.75	01/01/91	53.36	865.74	02/10/91	53.45	865.65	03/21/91	53.70	865.40
11/23/90	53.37	865.73	01/02/91	53.36	865.74	02/10/91	53.43	865.67	03/22/91	53.73	865.37
11/24/90	53.35	865.75	01/02/91	53.35	865.75	02/11/91	53.45	865.65	03/22/91	53.70	865.40
11/24/90	53.46	865.64	01/03/91	53.35	865.75	02/11/91	53.43	865.67	03/23/91	53.72	865.38
11/25/90	53.34	865.76	01/03/91	53.35	865.75	02/12/91	53.55	865.55	03/23/91	53.75	865.35
11/25/90	53.35	865.75	01/04/91	53.35	865.75	02/12/91	53.45	865.65	03/24/91	53.70	865.40
11/26/90	53.35	865.75	01/04/91	53.38	865.72	02/13/91	53.61	865.49	03/24/91	53.72	865.38
11/26/90	53.41	865.69	01/05/91	53.38	865.72	02/13/91	53.55	865.55	03/25/91	53.74	865.36

137-049-27BBC **(Continued)** MP Elev (msl,ft)=919.1

Horace Aquifer SI (ft.)=249-300

Date	Depth to Water (ft)	WL Elev (msl, ft)	Date	Depth to Water (ft)	WL Elev (msl, ft)	Date	Depth to Water (ft)	WL Elev (msl, ft)	Date	Depth to Water (ft)	WL Elev (msl, ft)
03/25/91	53.70	865.40	05/04/91	53.78	865.32	06/12/91	53.49	865.61	08/10/91	53.76	865.34
03/26/91	53.80	865.30	05/04/91	53.75	865.35	06/13/91	53.60	865.50	08/21/91	53.71	865.39
03/26/91	53.74	865.36	05/05/91	53.76	865.34	06/13/91	53.53	865.57	08/21/91	53.71	865.39
03/27/91	53.79	865.31	05/05/91	53.75	865.35	06/14/91	53.61	865.49	08/22/91	53.91	865.19
03/27/91	53.78	865.32	05/06/91	53.78	865.32	06/14/91	53.59	865.51	08/22/91	53.71	865.39
03/28/91	53.69	865.41	05/06/91	53.76	865.34	06/15/91	53.68	865.42	08/23/91	54.00	865.10
03/28/91	53.78	865.32	05/07/91	53.74	865.36	06/15/91	53.60	865.50	08/23/91	53.82	865.28
03/29/91	53.69	865.41	05/08/91	53.72	865.38	06/16/91	53.60	865.50	08/24/91	53.85	865.25
03/29/91	53.63	865.47	05/08/91	53.71	865.39	06/16/91	53.58	865.52	08/24/91	53.79	865.31
03/30/91	53.70	865.40	05/09/91	53.72	865.38	06/17/91	53.58	865.52	08/25/91	53.77	865.33
03/30/91	53.38	865.72	05/09/91	53.75	865.35	06/17/91	53.58	865.52	08/25/91	53.79	865.31
03/30/91	53.63	865.47	05/10/91	53.75	865.35	06/18/91	53.50	865.60	08/26/91	53.74	865.36
03/31/91	53.68	865.42	05/10/91	53.73	865.37	06/18/91	53.58	865.52	08/26/91	53.77	865.33
03/31/91	53.62	865.48	05/11/91	53.71	865.39	06/19/91	53.47	865.63	08/27/91	53.75	865.35
04/01/91	53.62	865.48	05/11/91	53.73	865.37	06/19/91	53.50	865.60	08/27/91	53.74	865.36
04/01/91	53.59	865.51	05/11/91	53.40	865.70	06/20/91	53.55	865.55	08/28/91	53.75	865.35
04/02/91	53.60	865.50	05/12/91	53.71	865.39	06/20/91	53.47	865.63	08/28/91	53.83	865.27
04/02/91	53.61	865.49	05/12/91	53.79	865.31	06/21/91	53.55	865.55	08/29/91	53.83	865.27
04/03/91	53.61	865.49	05/13/91	53.78	865.32	06/21/91	53.51	865.59	08/29/91	54.02	865.08
04/03/91	53.61	865.49	05/13/91	53.79	865.31	06/22/91	53.48	865.62	08/30/91	54.02	865.08
04/04/91	53.61	865.49	05/14/91	53.78	865.32	06/22/91	53.51	865.59	08/30/91	53.91	865.19
04/04/91	53.64	865.46	05/14/91	53.79	865.31	06/23/91	53.48	865.62	08/31/91	54.06	865.04
04/05/91	53.64	865.46	05/15/91	53.75	865.35	06/23/91	53.47	865.63	08/31/91	53.94	865.16
04/05/91	53.68	865.42	05/15/91	53.78	865.32	06/24/91	53.49	865.61	08/31/91	54.00	865.10
04/06/91	53.72	865.38	05/16/91	53.73	865.37	06/24/91	53.48	865.62	09/01/91	53.94	865.16
04/06/91	53.68	865.42	05/16/91	53.76	865.34	06/25/91	53.49	865.61	09/01/91	53.90	865.20
04/07/91	53.69	865.41	05/17/91	53.66	865.44	06/25/91	53.55	865.55	09/02/91	53.90	865.20
04/07/91	53.72	865.38	05/17/91	53.73	865.37	06/26/91	53.56	865.54	09/02/91	53.82	865.28
04/08/91	53.65	865.45	05/18/91	53.60	865.50	06/26/91	53.49	865.61	09/03/91	53.82	865.28
04/08/91	53.69	865.41	05/18/91	53.66	865.44	06/27/91	53.55	865.55	09/03/91	53.90	865.20
04/09/91	53.62	865.48	05/19/91	53.56	865.54	06/27/91	53.52	865.58	09/04/91	53.89	865.21
04/09/91	53.65	865.45	05/19/91	53.60	865.50	06/28/91	53.60	865.50	09/04/91	53.87	865.23
04/10/91	53.57	865.53	05/20/91	53.55	865.55	06/28/91	53.49	865.61	09/05/91	53.87	865.23
04/10/91	53.62	865.48	05/20/91	53.57	865.53	06/29/91	53.56	865.54	09/05/91	53.88	865.22
04/11/91	53.57	865.53	05/21/91	53.61	865.49	06/29/91	53.60	865.50	09/06/91	53.89	865.21
04/11/91	53.50	865.60	05/21/91	53.56	865.54	06/30/91	53.73	865.37	09/06/91	53.87	865.23
04/12/91	53.54	865.56	05/22/91	53.62	865.48	06/30/91	53.56	865.54	09/07/91	53.87	865.23
04/12/91	53.50	865.60	05/22/91	53.57	865.53	07/01/91	53.73	865.37	09/07/91	53.87	865.23
04/13/91	53.59	865.51	05/23/91	53.60	865.50	07/01/91	53.72	865.38	09/08/91	53.77	865.33
04/13/91	53.54	865.56	05/23/91	53.64	865.46	07/02/91	53.72	865.38	09/08/91	53.87	865.23
04/14/91	53.64	865.46	05/24/91	53.53	865.57	07/02/91	53.69	865.41	09/09/91	53.84	865.26
04/14/91	53.59	865.51	05/24/91	53.64	865.46	07/03/91	53.66	865.44	09/09/91	53.77	865.33
04/15/91	53.64	865.46	05/25/91	53.44	865.66	07/03/91	53.69	865.41	09/10/91	53.87	865.23
04/15/91	53.66	865.44	05/25/91	53.60	865.50	07/04/91	53.66	865.44	09/10/91	53.84	865.26
04/16/91	53.61	865.49	05/26/91	53.42	865.68	07/04/91	53.66	865.44	09/11/91	53.87	865.23
04/16/91	53.66	865.44	05/26/91	53.59	865.51	07/05/91	53.69	865.41	09/11/91	53.87	865.23
04/17/91	53.52	865.58	05/27/91	53.58	865.52	07/05/91	53.66	865.44	09/12/91	53.87	865.23
04/17/91	53.61	865.49	05/27/91	53.59	865.51	07/06/91	53.68	865.42	09/12/91	53.87	865.23
04/18/91	53.30	865.80	05/28/91	53.59	865.51	07/06/91	53.69	865.41	09/13/91	53.87	865.23
04/18/91	53.52	865.58	05/28/91	53.58	865.52	07/07/91	53.59	865.51	09/13/91	53.84	865.26
04/19/91	53.29	865.81	05/29/91	53.59	865.51	07/07/91	53.68	865.42	09/14/91	53.78	865.32
04/19/91	53.39	865.71	05/29/91	53.63	865.47	07/08/91	53.59	865.51	09/14/91	53.84	865.26
04/20/91	53.27	865.83	05/30/91	53.66	865.44	07/08/91	53.54	865.56	09/15/91	53.78	865.32
04/20/91	53.39	865.71	05/30/91	53.63	865.47	07/09/91	53.55	865.55	09/15/91	53.78	865.32
04/21/91	53.39	865.71	05/31/91	53.67	865.43	07/09/91	53.54	865.56	09/16/91	53.78	865.32
04/21/91	53.53	865.57	05/31/91	53.66	865.44	07/10/91	53.55	865.55	09/16/91	53.81	865.29
04/22/91	53.53	865.57	06/01/91	53.42	865.68	07/10/91	53.52	865.58	09/17/91	53.82	865.28
04/22/91	53.58	865.52	06/01/91	53.63	865.47	07/11/91	53.53	865.57	09/17/91	53.81	865.29
04/23/91	53.58	865.52	06/01/91	53.66	865.44	07/11/91	53.60	865.50	09/18/91	53.82	865.28
04/23/91	53.59	865.51	06/02/91	53.63	865.47	07/12/91	53.58	865.52	09/18/91	53.91	865.19
04/24/91	53.61	865.49	06/02/91	53.61	865.49	07/12/91	53.60	865.50	09/19/91	53.96	865.14
04/24/91	53.58	865.52	06/03/91	53.61	865.49	07/13/91	53.55	865.55	09/19/91	53.91	865.19
04/25/91	53.64	865.46	06/03/91	53.59	865.51	07/13/91	53.53	865.57	09/20/91	53.96	865.14
04/25/91	53.61	865.49	06/04/91	53.58	865.52	07/13/91	53.58	865.52	09/20/91	53.89	865.21
04/26/91	53.73	865.37	06/04/91	53.60	865.50	07/14/91	53.54	865.56	09/21/91	53.81	865.29
04/26/91	53.64	865.46	06/05/91	53.60	865.50	07/14/91	53.53	865.57	09/21/91	53.89	865.21
04/27/91	53.82	865.28	06/05/91	53.56	865.54	07/15/91	53.55	865.55	09/22/91	53.80	865.30
04/27/91	53.73	865.37	06/06/91	53.56	865.54	07/15/91	53.54	865.56	09/22/91	53.90	865.20
04/28/91	53.72	865.38	06/06/91	53.53	865.57	07/16/91	53.55	865.55	09/23/91	53.90	865.20
04/28/91	53.78	865.32	06/07/91	53.52	865.58	07/16/91	53.55	865.55	09/23/91	53.93	865.17
04/29/91	53.72	865.38	06/07/91	53.53	865.57	07/17/91	53.54	865.56	09/24/91	53.87	865.23
04/29/91	53.84	865.26	06/08/91	53.52	865.58	07/17/91	53.56	865.54	09/24/91	53.93	865.17
04/30/91	53.83	865.27	06/08/91	53.55	865.55	07/18/91	53.59	865.51	09/25/91	53.88	865.22
04/30/91	53.89	865.21	06/09/91	53.55	865.55	07/18/91	53.56	865.54	09/25/91	53.84	865.26
05/01/91	53.76	865.34	06/09/91	53.58	865.52	07/19/91	53.59	865.51	09/26/91	53.88	865.22
05/01/91	53.83	865.27	06/10/91	53.40	865.70	07/19/91	53.55	865.55	09/26/91	53.89	865.21
05/02/91	53.71	865.39	06/10/91	53.58	865.52	07/20/91	53.55	865.55	09/27/91	53.89	865.21
05/02/91	53.76	865.34	06/11/91	53.52	865.58	07/20/91	53.52	865.58	09/27/91	53.92	865.18
05/03/91	53.78	865.32	06/11/91	53.55	865.55	07/21/91	53.52	865.58	09/28/91	53.92	865.18
05/03/91	53.71	865.39	06/12/91	53.55	865.55	07/22/91	53.53	865.57	09/28/91	54.06	865.04

137-049-27BBC **(Continued)** MP Elev (msl,ft)=919.1

Horace Aquifer SI (ft.)=249-300

Date	Depth to Water (ft)	WL Elev (msl, ft)	Date	Depth to Water (ft)	WL Elev (msl, ft)	Date	Depth to Water (ft)	WL Elev (msl, ft)	Date	Depth to Water (ft)	WL Elev (msl, ft)
09/28/91	53.93	865.17	11/07/91	54.17	864.93	12/16/91	54.12	864.98	01/24/92	54.09	865.01
09/29/91	53.92	865.18	11/07/91	54.16	864.94	12/16/91	54.14	864.96	01/24/92	54.10	865.00
09/29/91	53.89	865.21	11/08/91	54.17	864.93	12/17/91	54.23	864.87	01/25/92	54.10	865.00
09/30/91	53.89	865.21	11/08/91	54.12	864.98	12/17/91	54.12	864.98	01/25/92	54.14	864.96
09/30/91	53.93	865.17	11/09/91	54.14	864.96	12/18/91	54.25	864.85	01/26/92	54.13	864.97
10/01/91	53.85	865.25	11/09/91	54.09	865.01	12/18/91	54.24	864.86	01/26/92	54.14	864.96
10/01/91	53.91	865.19	11/10/91	54.14	864.96	12/19/91	54.25	864.85	01/27/92	54.14	864.96
10/02/91	53.89	865.21	11/10/91	54.15	864.95	12/19/91	54.16	864.94	01/27/92	54.18	864.92
10/02/91	53.85	865.25	11/11/91	54.15	864.95	12/20/91	54.22	864.88	01/28/92	54.18	864.92
10/03/91	53.89	865.21	11/11/91	54.15	864.95	12/20/91	54.18	864.92	01/28/92	54.16	864.94
10/03/91	53.91	865.19	11/12/91	54.15	864.95	12/20/91	54.16	864.94	01/29/92	54.14	864.96
10/04/91	53.91	865.19	11/12/91	54.04	865.06	12/21/91	54.13	864.97	01/29/92	54.16	864.94
10/04/91	53.99	865.11	11/13/91	54.03	865.07	12/21/91	54.18	864.92	01/30/92	54.14	864.96
10/05/91	53.99	865.11	11/13/91	54.04	865.06	12/22/91	54.09	865.01	01/30/92	54.14	864.96
10/05/91	53.97	865.13	11/14/91	54.05	865.05	12/22/91	54.13	864.97	01/31/92	54.14	864.96
10/06/91	54.00	865.10	11/14/91	54.03	865.07	12/23/91	54.13	864.97	01/31/92	54.14	864.96
10/06/91	53.98	865.12	11/15/91	54.06	865.04	12/23/91	54.12	864.98	02/01/92	54.14	864.96
10/07/91	53.91	865.19	11/15/91	54.13	864.97	12/24/91	54.13	864.97	02/01/92	54.14	864.96
10/07/91	54.00	865.10	11/16/91	54.14	864.96	12/24/91	54.13	864.97	02/02/92	54.15	864.95
10/08/91	54.01	865.09	11/16/91	54.13	864.97	12/25/91	54.13	864.97	02/02/92	54.14	864.96
10/08/91	53.89	865.21	11/17/91	54.02	865.08	12/25/91	54.13	864.97	02/03/92	54.15	864.95
10/08/91	54.06	865.04	11/17/91	54.14	864.96	12/26/91	54.20	864.90	02/03/92	54.21	864.89
10/09/91	54.06	865.04	11/17/91	54.02	865.08	12/26/91	54.13	864.97	02/04/92	54.21	864.89
10/09/91	54.10	865.00	11/18/91	54.01	865.09	12/27/91	54.23	864.87	02/04/92	54.21	864.89
10/10/91	54.06	865.04	11/18/91	53.97	865.13	12/27/91	54.20	864.90	02/05/92	54.20	864.90
10/10/91	54.10	865.00	11/19/91	54.07	865.03	12/28/91	54.20	864.90	02/05/92	54.12	864.98
10/11/91	54.07	865.03	11/19/91	54.00	865.10	12/28/91	54.23	864.87	02/06/92	54.12	864.98
10/11/91	54.06	865.04	11/20/91	54.07	865.03	12/29/91	54.20	864.90	02/06/92	54.13	864.97
10/12/91	54.08	865.02	11/20/91	54.08	865.02	12/29/91	54.18	864.92	02/07/92	54.17	864.93
10/12/91	54.07	865.03	11/20/91	54.05	865.05	12/30/91	54.19	864.91	02/07/92	54.14	864.96
10/13/91	54.06	865.04	11/21/91	54.08	865.02	12/30/91	54.18	864.92	02/08/92	54.17	864.93
10/13/91	54.02	865.08	11/21/91	54.04	865.06	12/31/91	54.19	864.91	02/08/92	54.19	864.91
10/14/91	54.03	865.07	11/22/91	54.08	865.02	12/31/91	54.19	864.91	02/09/92	54.19	864.91
10/14/91	54.06	865.04	11/22/91	54.16	864.94				02/09/92	54.17	864.93
10/15/91	54.06	865.04	11/23/91	54.16	864.94	01/01/92	54.19	864.91	02/10/92	54.17	864.93
10/15/91	54.01	865.09	11/23/91	54.16	864.94	01/01/92	54.19	864.91	02/10/92	54.27	864.83
10/16/91	54.01	865.09	11/24/91	54.18	864.92	01/02/92	54.18	864.92	02/11/92	54.32	864.78
10/16/91	53.94	865.16	11/24/91	54.16	864.94	01/02/92	54.14	864.96	02/11/92	54.27	864.83
10/17/91	54.08	865.02	11/25/91	54.14	864.96	01/03/92	54.13	864.97	02/12/92	54.21	864.89
10/17/91	53.91	865.19	11/25/91	54.18	864.92	01/03/92	54.14	864.96	02/12/92	54.32	864.78
10/18/91	54.15	864.95	11/26/91	54.06	865.04	01/04/92	54.14	864.96	02/13/92	54.19	864.91
10/18/91	54.09	865.01	11/26/91	54.14	864.96	01/04/92	54.14	864.96	02/13/92	54.20	864.90
10/19/91	54.15	864.95	11/27/91	54.06	865.04	01/05/92	54.14	864.96	02/14/92	54.16	864.94
10/19/91	54.15	864.95	11/27/91	54.11	864.99	01/05/92	54.14	864.96	02/14/92	54.19	864.91
10/20/91	54.15	864.95	11/28/91	54.11	864.99	01/06/92	54.15	864.95	02/15/92	54.14	864.96
10/20/91	54.04	865.06	11/28/91	54.11	864.99	01/06/92	54.14	864.96	02/15/92	54.16	864.94
10/21/91	54.04	865.06	11/29/91	54.06	865.04	01/07/92	54.14	864.96	02/16/92	54.14	864.96
10/21/91	54.03	865.07	11/29/91	54.11	864.99	01/07/92	54.15	864.95	02/16/92	54.14	864.96
10/22/91	54.03	865.07	11/30/91	54.06	865.04	01/08/92	54.14	864.96	02/17/92	54.14	864.96
10/22/91	53.99	865.11	11/30/91	54.12	864.98	01/08/92	54.13	864.97	02/17/92	54.14	864.96
10/23/91	54.05	865.05	12/01/91	54.11	864.99	01/09/92	54.13	864.97	02/18/92	54.14	864.96
10/23/91	54.04	865.06	12/01/91	54.13	864.97	01/09/92	54.13	864.97	02/18/92	54.15	864.95
10/24/91	54.08	865.02	12/02/91	54.12	864.98	01/10/92	54.13	864.97	02/19/92	54.14	864.96
10/24/91	54.05	865.05	12/02/91	54.13	864.97	01/10/92	54.09	865.01	02/19/92	54.16	864.94
10/25/91	54.10	865.00	12/03/91	54.17	864.93	01/11/92	54.03	865.07	02/20/92	54.11	864.99
10/25/91	54.08	865.02	12/03/91	54.12	864.98	01/11/92	54.09	865.01	02/20/92	54.17	864.93
10/26/91	54.10	865.00	12/04/91	54.16	864.94	01/12/92	54.08	865.02	02/21/92	54.18	864.92
10/26/91	54.10	865.00	12/04/91	54.17	864.93	01/12/92	54.03	865.07	02/21/92	54.18	864.92
10/27/91	54.10	865.00	12/05/91	54.15	864.95	01/13/92	54.08	865.02	02/22/92	54.18	864.92
10/27/91	54.10	865.00	12/05/91	54.13	864.97	01/13/92	54.10	865.00	02/22/92	54.18	864.92
10/28/91	54.10	865.00	12/06/91	54.13	864.97	01/14/92	54.10	865.00	02/23/92	54.18	864.92
10/28/91	53.98	865.12	12/06/91	54.00	865.10	01/14/92	54.17	864.93	02/23/92	54.18	864.92
10/29/91	54.14	864.96	12/07/91	54.00	865.10	01/15/92	54.12	864.98	02/24/92	54.18	864.92
10/29/91	53.98	865.12	12/07/91	54.00	865.10	01/15/92	54.17	864.93	02/24/92	54.19	864.91
10/30/91	54.20	864.90	12/08/91	54.00	865.10	01/16/92	54.03	865.07	02/25/92	54.19	864.91
10/30/91	54.15	864.95	12/08/91	54.04	865.06	01/16/92	54.11	864.99	02/25/92	54.16	864.94
10/31/91	54.20	864.90	12/09/91	54.07	865.03	01/17/92	54.18	864.92	02/26/92	54.15	864.95
10/31/91	54.19	864.91	12/09/91	54.04	865.06	01/17/92	54.08	865.02	02/26/92	54.16	864.94
11/01/91	54.18	864.92	12/10/91	54.03	865.07	01/18/92	54.19	864.91	02/27/92	54.15	864.95
11/01/91	54.10	865.00	12/10/91	54.06	865.04	01/18/92	54.17	864.93	02/27/92	54.07	865.03
11/02/91	54.13	864.97	12/11/91	54.07	865.03	01/19/92	54.15	864.95	02/28/92	54.14	864.96
11/02/91	54.09	865.01	12/11/91	54.05	865.05	01/19/92	54.09	865.01	02/28/92	54.07	865.03
11/03/91	54.16	864.94	12/12/91	54.03	865.07	01/20/92	54.12	864.98	02/29/92	54.14	864.96
11/03/91	54.13	864.97	12/12/91	54.05	865.05	01/20/92	54.11	864.99	02/29/92	54.11	864.99
11/04/91	54.16	864.94	12/13/91	54.05	865.05	01/21/92	54.11	864.99	03/01/92	54.09	865.01
11/04/91	54.13	864.97	12/13/91	54.02	865.08	01/21/92	54.08	865.02	03/01/92	54.11	864.99
11/05/91	54.12	864.98	12/14/91	54.05	865.05	01/22/92	54.00	865.10	03/02/92	54.15	864.95
11/05/91	54.06	865.04	12/14/91	54.14	864.96	01/22/92	54.08	865.02	03/02/92	54.10	865.00
11/06/91	54.16	864.94	12/15/91	54.15	864.95	01/23/92	54.02	865.08	03/03/92	54.15	864.95
11/06/91	54.11	864.99	12/15/91	54.17	864.93	01/23/92	54.09	865.01	03/03/92	54.15	864.95

137-049-27BBC **(Continued)** MP Elev (msl,ft)=919.1

Horace Aquifer SI (ft.)=249-300

Date	Depth to Water (ft)	WL Elev (msl, ft)	Date	Depth to Water (ft)	WL Elev (msl, ft)	Date	Depth to Water (ft)	WL Elev (msl, ft)	Date	Depth to Water (ft)	WL Elev (msl, ft)
03/04/92	54.15	864.95	04/12/92	54.42	864.68	05/21/92	54.40	864.70	06/29/92	54.52	864.58
03/04/92	54.15	864.95	04/13/92	54.36	864.74	05/22/92	54.45	864.65	06/30/92	54.52	864.58
03/05/92	54.15	864.95	04/13/92	54.41	864.69	05/22/92	54.39	864.71	06/30/92	54.42	864.68
03/05/92	54.11	864.99	04/14/92	54.45	864.65	05/23/92	54.46	864.64	07/01/92	54.42	864.68
03/06/92	54.11	864.99	04/14/92	54.36	864.74	05/23/92	54.50	864.60	07/01/92	54.42	864.68
03/06/92	54.05	865.05	04/15/92	54.35	864.75	05/24/92	54.50	864.60	07/02/92	54.42	864.68
03/07/92	54.05	865.05	04/15/92	54.41	864.69	05/24/92	54.45	864.65	07/02/92	54.43	864.67
03/07/92	54.04	865.06	04/16/92	54.36	864.74	05/25/92	54.45	864.65	07/03/92	54.43	864.67
03/08/92	54.10	865.00	04/16/92	54.40	864.70	05/25/92	54.45	864.65	07/03/92	54.45	864.65
03/08/92	54.04	865.06	04/17/92	54.26	864.84	05/26/92	54.47	864.63	07/04/92	54.47	864.63
03/09/92	54.11	864.99	04/17/92	54.39	864.71	05/26/92	54.45	864.65	07/04/92	54.45	864.65
03/09/92	54.14	864.96	04/17/92	54.27	864.83	05/27/92	54.54	864.56	07/05/92	54.47	864.63
03/10/92	54.14	864.96	04/18/92	54.25	864.85	05/27/92	54.46	864.64	07/05/92	54.47	864.63
03/10/92	54.11	864.99	04/18/92	54.15	864.95	05/28/92	54.52	864.58	07/06/92	54.47	864.63
03/11/92	54.11	864.99	04/19/92	54.15	864.95	05/28/92	54.46	864.64	07/06/92	54.47	864.63
03/11/92	54.11	864.99	04/19/92	54.15	864.95	05/29/92	54.48	864.62	07/07/92	54.47	864.63
03/12/92	54.13	864.97	04/20/92	54.16	864.94	05/29/92	54.46	864.64	07/07/92	54.46	864.64
03/12/92	54.11	864.99	04/20/92	54.15	864.95	05/30/92	54.51	864.59	07/08/92	54.47	864.63
03/13/92	54.13	864.97	04/21/92	54.15	864.95	05/30/92	54.46	864.64	07/08/92	54.49	864.61
03/13/92	54.12	864.98	04/21/92	54.13	864.97	05/31/92	54.50	864.60	07/09/92	54.51	864.59
03/14/92	54.18	864.92	04/22/92	54.17	864.93	05/31/92	54.48	864.62	07/09/92	54.49	864.61
03/14/92	54.12	864.98	04/22/92	54.13	864.97	06/01/92	54.60	864.50	07/10/92	54.55	864.55
03/15/92	54.19	864.91	04/23/92	54.27	864.83	06/01/92	54.50	864.60	07/10/92	54.51	864.59
03/15/92	54.17	864.93	04/23/92	54.17	864.93	06/02/92	54.54	864.56	07/11/92	54.55	864.55
03/16/92	54.16	864.94	04/24/92	54.27	864.83	06/02/92	54.49	864.61	07/11/92	54.54	864.56
03/16/92	54.13	864.97	04/24/92	54.27	864.83	06/03/92	54.43	864.67	07/12/92	54.54	864.56
03/17/92	54.20	864.90	04/25/92	54.31	864.79	06/03/92	54.49	864.61	07/12/92	54.53	864.57
03/17/92	54.16	864.94	04/25/92	54.27	864.83	06/04/92	54.42	864.68	07/13/92	54.53	864.57
03/18/92	54.20	864.90	04/26/92	54.31	864.79	06/04/92	54.42	864.68	07/13/92	54.54	864.56
03/18/92	54.20	864.90	04/26/92	54.33	864.77	06/05/92	54.42	864.68	07/14/92	54.54	864.56
03/19/92	54.20	864.90	04/27/92	54.33	864.77	06/05/92	54.42	864.68	07/14/92	54.53	864.57
03/19/92	54.20	864.90	04/27/92	54.29	864.81	06/06/92	54.42	864.68	07/15/92	54.54	864.56
03/20/92	54.20	864.90	04/28/92	54.28	864.82	06/06/92	54.46	864.64	07/15/92	54.53	864.57
03/20/92	54.21	864.89	04/28/92	54.19	864.91	06/07/92	54.49	864.61	07/16/92	54.54	864.56
03/21/92	54.21	864.89	04/29/92	54.20	864.90	06/07/92	54.46	864.64	07/16/92	54.54	864.56
03/21/92	54.21	864.89	04/29/92	54.19	864.91	06/08/92	54.49	864.61	07/17/92	54.57	864.53
03/22/92	54.21	864.89	04/30/92	54.10	865.00	06/08/92	54.61	864.49	07/17/92	54.54	864.56
03/22/92	54.20	864.90	04/30/92	54.19	864.91	06/09/92	54.60	864.50	07/18/92	54.58	864.52
03/23/92	54.19	864.91	05/01/92	54.11	864.99	06/09/92	54.58	864.52	07/18/92	54.57	864.53
03/23/92	54.20	864.90	05/01/92	54.23	864.87	06/10/92	54.73	864.37	07/19/92	54.60	864.50
03/24/92	54.19	864.91	05/02/92	54.34	864.76	06/10/92	54.60	864.50	07/19/92	54.57	864.53
03/24/92	54.17	864.93	05/02/92	54.24	864.86	06/11/92	54.64	864.46	07/20/92	54.63	864.47
03/25/92	54.17	864.93	05/03/92	54.34	864.76	06/11/92	54.83	864.27	07/20/92	54.60	864.50
03/25/92	54.17	864.93	05/03/92	54.40	864.70	06/12/92	54.66	864.44	07/21/92	54.63	864.47
03/26/92	54.25	864.85	05/04/92	54.40	864.70	06/12/92	54.74	864.36	07/21/92	54.63	864.47
03/26/92	54.17	864.93	05/04/92	54.44	864.66	06/13/92	54.64	864.46	07/22/92	54.63	864.47
03/27/92	54.24	864.86	05/05/92	54.50	864.60	06/13/92	54.62	864.48	07/22/92	54.63	864.47
03/27/92	54.25	864.85	05/05/92	54.44	864.66	06/13/92	54.68	864.42	07/23/92	54.63	864.47
03/28/92	54.22	864.88	05/06/92	54.42	864.68	06/14/92	54.63	864.47	07/23/92	54.66	864.44
03/28/92	54.23	864.87	05/06/92	54.48	864.62	06/14/92	54.66	864.44	07/24/92	54.66	864.44
03/29/92	54.22	864.88	05/07/92	54.41	864.69	06/15/92	54.45	864.65	07/24/92	54.72	864.38
03/29/92	54.29	864.81	05/07/92	54.37	864.73	06/15/92	54.63	864.47	07/25/92	54.72	864.38
03/30/92	54.27	864.83	05/08/92	54.35	864.75	06/16/92	54.32	864.78	07/25/92	54.66	864.44
03/30/92	54.29	864.81	05/08/92	54.37	864.73	06/16/92	54.43	864.67	07/26/92	54.67	864.43
03/31/92	54.27	864.83	05/09/92	54.30	864.80	06/17/92	54.31	864.79	07/26/92	54.66	864.44
03/31/92	54.30	864.80	05/09/92	54.35	864.75	06/17/92	54.12	864.98	07/26/92	55.10	864.00
03/31/92	54.33	864.77	05/10/92	54.30	864.80	06/18/92	54.20	864.90	07/27/92	54.65	864.45
04/01/92	54.33	864.77	05/10/92	54.30	864.80	06/18/92	54.12	864.98	07/27/92	54.67	864.43
04/01/92	54.32	864.78	05/11/92	54.30	864.80	06/19/92	54.30	864.80	07/28/92	54.65	864.45
04/02/92	54.32	864.78	05/11/92	54.29	864.81	06/19/92	54.20	864.90	07/28/92	54.69	864.41
04/02/92	54.21	864.89	05/12/92	54.38	864.72	06/20/92	54.31	864.79	07/29/92	54.73	864.37
04/03/92	54.18	864.92	05/12/92	54.30	864.80	06/20/92	54.37	864.73	07/29/92	54.69	864.41
04/03/92	54.21	864.89	05/13/92	54.41	864.69	06/21/92	54.40	864.70	07/30/92	54.73	864.37
04/04/92	54.22	864.88	05/13/92	54.38	864.72	06/21/92	54.37	864.73	07/30/92	54.73	864.37
04/04/92	54.18	864.92	05/14/92	54.39	864.71	06/22/92	54.40	864.70	07/31/92	54.73	864.37
04/05/92	54.21	864.89	05/14/92	54.34	864.76	06/22/92	54.39	864.71	07/31/92	54.73	864.37
04/05/92	54.15	864.95	05/15/92	54.34	864.76	06/23/92	54.39	864.71	08/01/92	54.90	864.20
04/06/92	54.20	864.90	05/15/92	54.42	864.68	06/23/92	54.39	864.71	08/01/92	54.73	864.37
04/06/92	54.17	864.93	05/16/92	54.37	864.73	06/24/92	54.44	864.66	08/02/92	54.80	864.30
04/07/92	54.27	864.83	05/16/92	54.33	864.77	06/24/92	54.39	864.71	08/02/92	54.83	864.27
04/07/92	54.21	864.89	05/17/92	54.41	864.69	06/24/92	54.45	864.65	08/03/92	54.80	864.30
04/08/92	54.27	864.83	05/17/92	54.34	864.76	06/25/92	54.48	864.62	08/03/92	54.83	864.27
04/08/92	54.27	864.83	05/18/92	54.48	864.62	06/25/92	54.44	864.66	08/04/92	54.81	864.29
04/09/92	54.27	864.83	05/18/92	54.41	864.69	06/26/92	54.48	864.62	08/04/92	55.07	864.03
04/09/92	54.29	864.81	05/19/92	54.37	864.73	06/26/92	54.52	864.58	08/05/92	54.91	864.19
04/10/92	54.21	864.89	05/19/92	54.41	864.69	06/27/92	54.49	864.61	08/05/92	55.03	864.07
04/10/92	54.29	864.81	05/20/92	54.40	864.70	06/27/92	54.52	864.58	08/06/92	54.68	864.42
04/11/92	54.21	864.89	05/20/92	54.37	864.73	06/28/92	54.48	864.62	08/06/92	54.93	864.17
04/11/92	54.38	864.72	05/20/92	54.39	864.71	06/28/92	54.51	864.59	08/07/92	54.66	864.44
04/12/92	54.38	864.72	05/21/92	54.40	864.70	06/29/92	54.51	864.59	08/07/92	54.68	864.42

137-049-27BBC **(Continued)** MP Elev (msl,ft)=919.1

Horace Aquifer SI (ft.)=249-300

Date	Depth to Water (ft)	WL Elev (msl, ft)	Date	Depth to Water (ft)	WL Elev (msl, ft)	Date	Depth to Water (ft)	WL Elev (msl, ft)	Date	Depth to Water (ft)	WL Elev (msl, ft)
08/08/92	54.65	864.45	09/16/92	54.71	864.39	10/25/92	54.92	864.18	12/04/92	54.84	864.26
08/08/92	54.66	864.44	09/17/92	54.66	864.44	10/26/92	54.90	864.20	12/04/92	54.90	864.20
08/09/92	54.65	864.45	09/17/92	54.71	864.39	10/26/92	54.89	864.21	12/05/92	54.90	864.20
08/09/92	54.66	864.44	09/18/92	54.66	864.44	10/27/92	54.90	864.20	12/05/92	54.87	864.23
08/10/92	54.66	864.44	09/18/92	54.72	864.38	10/27/92	54.87	864.23	12/06/92	54.87	864.23
08/10/92	54.74	864.36	09/19/92	54.72	864.38	10/28/92	54.93	864.17	12/06/92	54.82	864.28
08/11/92	54.74	864.36	09/19/92	54.65	864.45	10/28/92	54.89	864.21	12/07/92	54.86	864.24
08/11/92	54.77	864.33	09/20/92	54.65	864.45	10/29/92	54.93	864.17	12/07/92	54.85	864.25
08/12/92	54.76	864.34	09/20/92	54.62	864.48	10/29/92	54.93	864.17	12/08/92	54.82	864.28
08/12/92	54.78	864.32	09/21/92	54.75	864.35	10/30/92	54.93	864.17	12/08/92	54.86	864.24
08/13/92	54.78	864.32	09/21/92	54.62	864.48	10/30/92	54.93	864.17	12/09/92	54.77	864.33
08/13/92	54.79	864.31	09/22/92	54.82	864.28	10/31/92	54.93	864.17	12/09/92	54.82	864.28
08/14/92	54.79	864.31	09/22/92	54.75	864.35	10/31/92	54.93	864.17	12/10/92	54.85	864.25
08/14/92	54.82	864.28	09/23/92	54.81	864.29	11/01/92	54.93	864.17	12/10/92	54.77	864.33
08/15/92	54.82	864.28	09/23/92	54.76	864.34	11/01/92	54.88	864.22	12/11/92	54.86	864.24
08/15/92	54.82	864.28	09/24/92	54.76	864.34	11/02/92	54.88	864.22	12/11/92	54.84	864.26
08/16/92	54.81	864.29	09/24/92	54.82	864.28	11/02/92	54.76	864.34	12/12/92	54.84	864.26
08/16/92	54.82	864.28	09/24/92	54.67	864.43	11/03/92	54.75	864.35	12/12/92	54.86	864.24
08/17/92	54.81	864.29	09/25/92	54.72	864.38	11/03/92	54.76	864.34	12/13/92	54.86	864.24
08/17/92	54.82	864.28	09/25/92	54.67	864.43	11/04/92	54.76	864.34	12/13/92	54.86	864.24
08/18/92	54.82	864.28	09/26/92	54.75	864.35	11/04/92	54.82	864.28	12/14/92	54.81	864.29
08/18/92	54.82	864.28	09/26/92	54.72	864.38	11/05/92	54.88	864.22	12/14/92	54.86	864.24
08/19/92	54.82	864.28	09/27/92	54.83	864.27	11/05/92	54.82	864.28	12/15/92	54.77	864.33
08/19/92	54.82	864.28	09/27/92	54.74	864.36	11/06/92	54.88	864.22	12/15/92	54.81	864.29
08/20/92	54.81	864.29	09/28/92	54.87	864.23	11/06/92	54.92	864.18	12/16/92	54.83	864.27
08/20/92	54.82	864.28	09/28/92	54.83	864.27	11/07/92	54.90	864.20	12/16/92	54.77	864.33
08/21/92	54.81	864.29	09/29/92	54.87	864.23	11/07/92	54.92	864.18	12/17/92	54.83	864.27
08/21/92	54.84	864.26	09/29/92	54.83	864.27	11/08/92	54.90	864.20	12/17/92	54.83	864.27
08/22/92	54.75	864.35	09/30/92	54.83	864.27	11/08/92	54.87	864.23	12/18/92	54.83	864.27
08/22/92	54.82	864.28	09/30/92	54.83	864.27	11/09/92	54.82	864.28	12/18/92	54.80	864.30
08/23/92	54.66	864.44	10/01/92	54.83	864.27	11/09/92	54.87	864.23	12/19/92	54.82	864.28
08/23/92	54.75	864.35	10/01/92	54.80	864.30	11/10/92	54.85	864.25	12/19/92	54.80	864.30
08/24/92	54.66	864.44	10/02/92	54.80	864.30	11/10/92	54.82	864.28	12/20/92	54.82	864.28
08/24/92	54.73	864.37	10/02/92	54.80	864.30	11/11/92	54.85	864.25	12/20/92	54.81	864.29
08/25/92	54.73	864.37	10/03/92	54.81	864.29	11/11/92	54.83	864.27	12/21/92	54.81	864.29
08/25/92	54.77	864.33	10/03/92	54.80	864.30	11/12/92	54.83	864.27	12/21/92	54.78	864.32
08/26/92	54.79	864.31	10/04/92	54.81	864.29	11/12/92	54.83	864.27	12/22/92	54.80	864.30
08/26/92	54.77	864.33	10/04/92	54.82	864.28	11/13/92	54.83	864.27	12/22/92	54.84	864.26
08/27/92	54.76	864.34	10/05/92	54.82	864.28	11/13/92	54.86	864.24	12/23/92	54.84	864.26
08/27/92	54.79	864.31	10/05/92	54.86	864.24	11/14/92	54.90	864.20	12/23/92	54.95	864.15
08/28/92	54.73	864.37	10/06/92	54.89	864.21	11/14/92	54.86	864.24	12/24/92	54.74	864.36
08/28/92	54.76	864.34	10/06/92	54.86	864.24	11/15/92	54.90	864.20	12/24/92	54.95	864.15
08/29/92	54.73	864.37	10/07/92	54.89	864.21	11/15/92	54.91	864.19	12/25/92	54.79	864.31
08/29/92	54.66	864.44	10/07/92	54.89	864.21	11/16/92	54.90	864.20	12/25/92	54.89	864.21
08/30/92	54.66	864.44	10/08/92	54.82	864.28	11/16/92	54.89	864.21	12/26/92	54.85	864.25
08/30/92	54.74	864.36	10/08/92	54.89	864.21	11/17/92	54.89	864.21	12/26/92	54.90	864.20
08/31/92	54.74	864.36	10/09/92	55.04	864.06	11/17/92	54.90	864.20	12/27/92	54.85	864.25
08/31/92	54.76	864.34	10/09/92	54.79	864.31	11/18/92	54.94	864.16	12/27/92	54.91	864.19
09/01/92	54.76	864.34	10/10/92	54.93	864.17	11/18/92	54.94	864.16	12/28/92	54.91	864.19
09/01/92	54.64	864.46	10/10/92	54.89	864.21	11/18/92	54.90	864.20	12/28/92	54.96	864.14
09/02/92	54.62	864.48	10/11/92	54.89	864.21	11/19/92	54.94	864.16	12/29/92	54.94	864.16
09/02/92	54.64	864.46	10/11/92	54.82	864.28	11/19/92	54.90	864.20	12/29/92	54.95	864.15
09/03/92	54.64	864.46	10/12/92	54.87	864.23	11/20/92	54.90	864.20	12/30/92	54.92	864.18
09/03/92	54.68	864.42	10/12/92	54.90	864.20	11/20/92	54.84	864.26	12/30/92	54.94	864.16
09/04/92	54.63	864.47	10/13/92	54.90	864.20	11/21/92	54.85	864.25	12/31/92	55.00	864.10
09/04/92	54.68	864.42	10/13/92	54.85	864.25	11/21/92	54.84	864.26	12/31/92	54.93	864.17
09/05/92	54.68	864.42	10/14/92	55.12	863.98	11/22/92	54.85	864.25			
09/05/92	54.63	864.47	10/14/92	54.90	864.20	11/22/92	54.82	864.28	01/01/93	55.00	864.10
09/06/92	54.68	864.42	10/15/92	55.05	864.05	11/23/92	54.84	864.26	01/01/93	54.98	864.12
09/06/92	54.74	864.36	10/15/92	55.01	864.09	11/23/92	54.82	864.28	01/02/93	54.98	864.12
09/07/92	54.66	864.44	10/16/92	55.01	864.09	11/24/92	54.84	864.26	01/02/93	54.84	864.26
09/07/92	54.72	864.38	10/16/92	55.00	864.10	11/24/92	54.89	864.21	01/03/93	54.82	864.28
09/08/92	54.67	864.43	10/17/92	55.14	863.96	11/25/92	54.89	864.21	01/03/93	54.85	864.25
09/08/92	54.63	864.47	10/17/92	55.00	864.10	11/25/92	54.90	864.20	01/04/93	54.90	864.20
09/09/92	54.61	864.49	10/17/92	54.99	864.11	11/26/92	54.90	864.20	01/04/93	54.85	864.25
09/09/92	54.63	864.47	10/18/92	55.00	864.10	11/26/92	54.90	864.20	01/05/93	54.90	864.20
09/10/92	54.61	864.49	10/18/92	54.99	864.11	11/27/92	54.90	864.20	01/05/93	54.92	864.18
09/10/92	54.72	864.38	10/19/92	54.90	864.20	11/27/92	54.90	864.20	01/06/93	54.92	864.18
09/11/92	54.71	864.39	10/19/92	55.00	864.10	11/28/92	54.83	864.27	01/06/93	54.90	864.20
09/11/92	54.73	864.37	10/20/92	54.90	864.20	11/28/92	54.90	864.20	01/07/93	54.91	864.19
09/11/92	54.72	864.38	10/20/92	54.89	864.21	11/29/92	54.84	864.26	01/07/93	54.90	864.20
09/12/92	54.66	864.44	10/21/92	54.89	864.21	11/29/92	54.83	864.27	01/08/93	54.97	864.13
09/12/92	54.73	864.37	10/21/92	54.90	864.20	11/30/92	54.84	864.26	01/08/93	54.91	864.19
09/13/92	54.66	864.44	10/22/92	54.87	864.23	11/30/92	54.78	864.32	01/09/93	54.97	864.13
09/13/92	54.62	864.48	10/22/92	54.89	864.21	12/01/92	54.78	864.32	01/09/93	55.03	864.07
09/14/92	54.66	864.44	10/23/92	54.88	864.22	12/01/92	54.73	864.37	01/10/93	55.03	864.07
09/14/92	54.72	864.38	10/23/92	54.92	864.18	12/02/92	54.80	864.30	01/10/93	55.03	864.07
09/15/92	54.67	864.43	10/24/92	54.92	864.18	12/02/92	54.76	864.34	01/11/93	55.03	864.07
09/15/92	54.72	864.38	10/24/92	54.92	864.18	12/03/92	54.80	864.30	01/11/93	54.97	864.13
09/16/92	54.67	864.43	10/25/92	54.85	864.25	12/03/92	54.84	864.26	01/12/93	54.90	864.20

137-049-27BBC **(Continued)** MP Elev (msl,ft)=919.1

Horace Aquifer SI (ft.)=249-300

Date	Depth to Water (ft)	WL Elev (msl, ft)	Date	Depth to Water (ft)	WL Elev (msl, ft)	Date	Depth to Water (ft)	WL Elev (msl, ft)	Date	Depth to Water (ft)	WL Elev (msl, ft)
01/12/93	54.97	864.13	02/21/93	54.79	864.31	04/02/93	54.60	864.50	05/11/93	55.01	864.09
01/13/93	54.90	864.20	02/22/93	54.78	864.32	04/02/93	54.58	864.52	05/12/93	55.00	864.10
01/13/93	54.91	864.19	02/22/93	54.82	864.28	04/03/93	54.58	864.52	05/12/93	54.99	864.11
01/14/93	54.91	864.19	02/23/93	54.85	864.25	04/03/93	54.64	864.46	05/13/93	54.89	864.21
01/14/93	54.91	864.19	02/23/93	54.82	864.28	04/04/93	54.64	864.46	05/13/93	54.99	864.11
01/15/93	54.91	864.19	02/24/93	54.85	864.25	04/04/93	54.71	864.39	05/14/93	54.91	864.19
01/15/93	54.82	864.28	02/24/93	54.87	864.23	04/05/93	54.72	864.38	05/14/93	54.89	864.21
01/16/93	54.82	864.28	02/25/93	54.88	864.22	04/05/93	54.71	864.39	05/15/93	54.94	864.16
01/16/93	54.78	864.32	02/25/93	54.87	864.23	04/06/93	54.79	864.31	05/15/93	54.91	864.19
01/17/93	54.87	864.23	02/26/93	54.88	864.22	04/06/93	54.72	864.38	05/16/93	54.97	864.13
01/17/93	54.82	864.28	02/26/93	54.90	864.20	04/07/93	54.81	864.29	05/16/93	54.94	864.16
01/18/93	54.90	864.20	02/27/93	54.86	864.24	04/07/93	54.79	864.31	05/17/93	54.98	864.12
01/18/93	54.87	864.23	02/27/93	54.90	864.20	04/08/93	54.81	864.29	05/17/93	54.96	864.14
01/19/93	54.90	864.20	02/28/93	54.82	864.28	04/08/93	54.81	864.29	05/18/93	55.01	864.09
01/19/93	54.90	864.20	02/28/93	54.86	864.24	04/09/93	54.84	864.26	05/18/93	54.98	864.12
01/20/93	54.90	864.20	03/01/93	54.80	864.30	04/09/93	54.81	864.29	05/19/93	55.01	864.09
01/20/93	54.87	864.23	03/01/93	54.82	864.28	04/10/93	54.84	864.26	05/19/93	55.02	864.08
01/21/93	54.87	864.23	03/02/93	54.80	864.30	04/10/93	54.86	864.24	05/20/93	55.00	864.10
01/21/93	54.79	864.31	03/02/93	54.79	864.31	04/11/93	54.87	864.23	05/20/93	55.01	864.09
01/22/93	54.79	864.31	03/03/93	54.81	864.29	04/11/93	54.86	864.24	05/21/93	55.27	863.83
01/22/93	54.78	864.32	03/03/93	54.79	864.31	04/12/93	54.90	864.20	05/21/93	55.01	864.09
01/23/93	54.79	864.31	03/04/93	54.83	864.27	04/12/93	54.87	864.23	05/22/93	55.27	863.83
01/23/93	54.75	864.35	03/04/93	54.81	864.29	04/13/93	54.90	864.20	05/22/93	54.99	864.11
01/24/93	54.86	864.24	03/05/93	54.83	864.27	04/13/93	54.90	864.20	05/23/93	54.89	864.21
01/24/93	54.79	864.31	03/05/93	54.80	864.30	04/14/93	54.90	864.20	05/23/93	54.99	864.11
01/25/93	54.86	864.24	03/06/93	54.80	864.30	04/14/93	54.90	864.20	05/24/93	54.96	864.14
01/25/93	54.77	864.33	03/06/93	54.80	864.30	04/15/93	54.87	864.23	05/24/93	54.89	864.21
01/26/93	54.81	864.29	03/07/93	54.80	864.30	04/15/93	54.90	864.20	05/25/93	54.99	864.11
01/26/93	54.76	864.34	03/07/93	54.77	864.33	04/16/93	54.85	864.25	05/25/93	54.96	864.14
01/27/93	54.81	864.29	03/08/93	54.82	864.28	04/16/93	54.87	864.23	05/26/93	54.99	864.11
01/27/93	54.78	864.32	03/08/93	54.78	864.32	04/17/93	54.83	864.27	05/26/93	55.10	864.00
01/28/93	54.78	864.32	03/09/93	54.82	864.28	04/17/93	54.86	864.24	05/27/93	55.01	864.09
01/28/93	54.89	864.21	03/09/93	54.77	864.33	04/18/93	54.83	864.27	05/27/93	54.95	864.15
01/29/93	54.89	864.21	03/10/93	54.87	864.23	04/18/93	54.82	864.28	05/28/93	54.99	864.11
01/29/93	54.86	864.24	03/10/93	54.78	864.32	04/19/93	54.87	864.23	05/28/93	55.03	864.07
01/30/93	54.79	864.31	03/11/93	54.90	864.20	04/19/93	54.82	864.28	05/29/93	54.97	864.13
01/30/93	54.86	864.24	03/11/93	54.87	864.23	04/20/93	54.87	864.23	05/29/93	55.03	864.07
01/31/93	54.83	864.27	03/12/93	54.94	864.16	04/20/93	54.92	864.18	05/30/93	54.95	864.15
01/31/93	54.79	864.31	03/12/93	54.88	864.22	04/21/93	54.91	864.19	05/30/93	54.97	864.13
02/01/93	54.84	864.26	03/13/93	54.92	864.18	04/21/93	54.94	864.16	05/31/93	54.96	864.14
02/01/93	54.83	864.27	03/13/93	54.94	864.16	04/22/93	54.91	864.19	05/31/93	54.98	864.12
02/02/93	54.83	864.27	03/14/93	54.83	864.27	04/22/93	54.85	864.25	06/01/93	54.94	864.16
02/02/93	54.84	864.26	03/14/93	54.92	864.18	04/23/93	54.76	864.34	06/01/93	54.98	864.12
02/03/93	54.83	864.27	03/15/93	54.73	864.37	04/23/93	54.85	864.25	06/02/93	54.94	864.16
02/03/93	54.90	864.20	03/15/93	54.83	864.27	04/24/93	54.75	864.35	06/02/93	54.94	864.16
02/04/93	54.90	864.20	03/16/93	54.73	864.37	04/24/93	54.81	864.29	06/03/93	54.94	864.16
02/04/93	54.90	864.20	03/16/93	54.93	864.17	04/25/93	54.81	864.29	06/03/93	54.96	864.14
02/05/93	54.90	864.20	03/17/93	54.93	864.17	04/25/93	54.90	864.20	06/04/93	54.96	864.14
02/05/93	54.90	864.20	03/17/93	54.96	864.14	04/26/93	54.87	864.23	06/04/93	55.08	864.02
02/06/93	54.90	864.20	03/18/93	54.88	864.22	04/26/93	54.90	864.20	06/05/93	55.00	864.10
02/06/93	54.83	864.27	03/18/93	54.96	864.14	04/27/93	54.87	864.23	06/05/93	55.04	864.06
02/07/93	54.86	864.24	03/19/93	54.85	864.25	04/27/93	54.83	864.27	06/05/93	55.01	864.09
02/07/93	54.82	864.28	03/19/93	54.89	864.21	04/28/93	54.87	864.23	06/06/93	54.98	864.12
02/08/93	54.87	864.23	03/20/93	54.89	864.21	04/28/93	54.83	864.27	06/06/93	55.00	864.10
02/08/93	54.85	864.25	03/20/93	54.91	864.19	04/29/93	54.87	864.23	06/07/93	54.98	864.12
02/09/93	54.82	864.28	03/21/93	54.91	864.19	04/29/93	54.87	864.23	06/07/93	54.85	864.25
02/09/93	54.85	864.25	03/21/93	54.91	864.19	04/30/93	54.87	864.23	06/08/93	54.85	864.25
02/10/93	54.83	864.27	03/22/93	54.91	864.19	04/30/93	54.89	864.21	06/08/93	54.77	864.33
02/10/93	54.89	864.21	03/22/93	54.92	864.18	05/01/93	54.91	864.19	06/09/93	54.77	864.33
02/11/93	54.89	864.21	03/22/93	54.89	864.21	05/01/93	54.89	864.21	06/09/93	54.86	864.24
02/11/93	54.90	864.20	03/23/93	54.88	864.22	05/02/93	54.89	864.21	06/10/93	54.86	864.24
02/12/93	54.85	864.25	03/23/93	54.91	864.19	05/02/93	54.91	864.19	06/10/93	54.91	864.19
02/12/93	54.90	864.20	03/24/93	54.87	864.23	05/02/93	54.88	864.22	06/11/93	54.91	864.19
02/13/93	54.84	864.26	03/24/93	54.88	864.22	05/03/93	54.86	864.24	06/11/93	54.95	864.15
02/13/93	54.85	864.25	03/25/93	54.87	864.23	05/03/93	54.88	864.22	06/12/93	54.95	864.15
02/14/93	54.84	864.26	03/25/93	54.87	864.23	05/04/93	54.86	864.24	06/12/93	54.99	864.11
02/14/93	54.86	864.24	03/26/93	54.83	864.27	05/04/93	55.05	864.05	06/13/93	54.98	864.12
02/15/93	54.89	864.21	03/26/93	54.87	864.23	05/05/93	55.00	864.10	06/13/93	54.97	864.13
02/15/93	54.86	864.24	03/27/93	54.77	864.33	05/05/93	55.12	863.98	06/14/93	55.07	864.03
02/16/93	54.93	864.17	03/27/93	54.83	864.27	05/06/93	55.01	864.09	06/14/93	54.97	864.13
02/16/93	54.89	864.21	03/28/93	54.73	864.37	05/06/93	55.12	863.98	06/14/93	55.04	864.06
02/17/93	54.92	864.18	03/28/93	54.77	864.33	05/07/93	55.01	864.09	06/15/93	55.03	864.07
02/17/93	54.93	864.17	03/29/93	54.70	864.40	05/07/93	54.90	864.20	06/15/93	55.07	864.03
02/18/93	54.92	864.18	03/29/93	54.73	864.37	05/08/93	54.87	864.23	06/16/93	54.94	864.16
02/18/93	54.86	864.24	03/30/93	54.66	864.44	05/08/93	54.90	864.20	06/16/93	55.03	864.07
02/19/93	54.86	864.24	03/30/93	54.70	864.40	05/09/93	54.86	864.24	06/17/93	55.02	864.08
02/19/93	54.83	864.27	03/31/93	54.64	864.46	05/09/93	54.94	864.16	06/17/93	54.96	864.14
02/20/93	54.83	864.27	03/31/93	54.66	864.44	05/10/93	54.94	864.16	06/18/93	55.02	864.08
02/20/93	54.79	864.31	04/01/93	54.60	864.50	05/10/93	54.99	864.11	06/18/93	55.05	864.05
02/21/93	54.77	864.33	04/01/93	54.64	864.46	05/11/93	54.99	864.11	06/19/93	55.05	864.05

137-049-27BBC **(Continued)** MP Elev (msl,ft)=919.1

Horace Aquifer SI (ft.)=249-300

Date	Depth to Water (ft)	WL Elev (msl, ft)	Date	Depth to Water (ft)	WL Elev (msl, ft)	Date	Depth to Water (ft)	WL Elev (msl, ft)	Date	Depth to Water (ft)	WL Elev (msl, ft)
06/19/93	55.04	864.06	07/29/93	54.87	864.23	10/28/93	55.35	863.75	12/06/93	55.36	863.74
06/20/93	55.04	864.06	07/30/93	54.85	864.25	10/28/93	55.30	863.80	12/06/93	55.40	863.70
06/20/93	55.04	864.06	07/30/93	54.87	864.23	10/29/93	55.48	863.62	12/07/93	55.40	863.70
06/21/93	55.04	864.06	07/31/93	54.85	864.25	10/29/93	55.35	863.75	12/07/93	55.40	863.70
06/21/93	55.05	864.05	07/31/93	54.88	864.22	10/30/93	55.48	863.62	12/08/93	55.38	863.72
06/22/93	54.96	864.14	08/01/93	54.88	864.22	10/30/93	55.51	863.59	12/08/93	55.40	863.70
06/22/93	55.05	864.05	08/01/93	54.88	864.22	10/31/93	55.49	863.61	12/09/93	55.36	863.74
06/23/93	54.96	864.14	08/02/93	54.96	864.14	10/31/93	55.51	863.59	12/09/93	55.38	863.72
06/23/93	54.87	864.23	08/02/93	54.88	864.22	11/01/93	55.47	863.63	12/10/93	55.48	863.62
06/24/93	54.87	864.23	08/03/93	54.96	864.14	11/01/93	55.49	863.61	12/10/93	55.36	863.74
06/24/93	54.87	864.23	08/03/93	55.06	864.04	11/02/93	55.47	863.63	12/11/93	55.48	863.62
06/25/93	54.87	864.23	08/04/93	55.09	864.01	11/02/93	55.47	863.63	12/11/93	55.43	863.67
06/25/93	54.89	864.21	08/04/93	55.06	864.04	11/03/93	55.47	863.63	12/12/93	55.27	863.83
06/26/93	54.89	864.21	08/05/93	55.09	864.01	11/03/93	55.39	863.71	12/12/93	55.43	863.67
06/26/93	54.90	864.20	08/05/93	55.09	864.01	11/04/93	55.43	863.67	12/13/93	55.37	863.73
06/27/93	54.90	864.20	08/05/93	55.05	864.05	11/04/93	55.39	863.71	12/13/93	55.27	863.83
06/27/93	54.94	864.16	08/06/93	55.09	864.01	11/05/93	55.43	863.67	12/14/93	55.41	863.69
06/28/93	54.97	864.13	08/06/93	55.09	864.01	11/05/93	55.48	863.62	12/14/93	55.37	863.73
06/28/93	54.94	864.16	08/07/93	55.09	864.01	11/06/93	55.48	863.62	12/15/93	55.42	863.68
06/29/93	54.98	864.12	08/07/93	55.09	864.01	11/06/93	55.48	863.62	12/15/93	55.41	863.69
06/29/93	54.89	864.21	08/08/93	55.09	864.01	11/07/93	55.47	863.63	12/16/93	55.42	863.68
06/30/93	54.89	864.21	08/08/93	55.05	864.05	11/07/93	55.48	863.62	12/16/93	55.42	863.68
06/30/93	54.90	864.20	08/09/93	55.05	864.05	11/08/93	55.47	863.63	12/17/93	55.42	863.68
07/01/93	54.89	864.21	08/09/93	55.27	863.83	11/08/93	55.51	863.59	12/17/93	55.41	863.69
07/01/93	54.91	864.19	08/10/93	55.16	863.94	11/09/93	55.51	863.59	12/18/93	55.41	863.69
07/02/93	54.89	864.21	08/10/93	55.17	863.93	11/09/93	55.54	863.56	12/18/93	55.41	863.69
07/02/93	54.91	864.19	08/11/93	55.16	863.94	11/10/93	55.54	863.56	12/19/93	55.41	863.69
07/03/93	54.78	864.32	08/11/93	55.12	863.98	11/10/93	55.53	863.57	12/19/93	55.40	863.70
07/03/93	54.91	864.19	08/12/93	55.17	863.93	11/10/93	55.54	863.56	12/20/93	55.40	863.70
07/04/93	54.73	864.37	08/12/93	55.12	863.98	11/11/93	55.53	863.57	12/20/93	55.39	863.71
07/04/93	54.78	864.32	08/29/93	55.15	863.95	11/11/93	55.53	863.57	12/21/93	55.37	863.73
07/05/93	54.73	864.37	09/25/93	55.34	863.76	11/12/93	55.48	863.62	12/21/93	55.39	863.71
07/05/93	54.74	864.36	10/04/93	55.41	863.69	11/12/93	55.49	863.61	12/22/93	55.37	863.73
07/06/93	54.74	864.36	10/05/93	55.41	863.69	11/12/93	55.53	863.57	12/22/93	55.38	863.72
07/06/93	54.84	864.26	10/05/93	55.40	863.70	11/13/93	55.49	863.61	12/23/93	55.42	863.68
07/07/93	54.84	864.26	10/06/93	55.47	863.63	11/13/93	55.42	863.68	12/23/93	55.38	863.72
07/07/93	54.88	864.22	10/06/93	55.37	863.73	11/14/93	55.47	863.63	12/24/93	55.39	863.71
07/08/93	54.89	864.21	10/07/93	55.43	863.67	11/14/93	55.44	863.66	12/24/93	55.42	863.68
07/08/93	54.88	864.22	10/07/93	55.43	863.67	11/15/93	55.47	863.63	12/25/93	55.39	863.71
07/09/93	54.94	864.16	10/08/93	55.43	863.67	11/15/93	55.47	863.63	12/25/93	55.40	863.70
07/09/93	54.89	864.21	10/08/93	55.46	863.64	11/16/93	55.49	863.61	12/26/93	55.40	863.70
07/10/93	54.95	864.15	10/09/93	55.49	863.61	11/16/93	55.47	863.63	12/26/93	55.46	863.64
07/10/93	54.94	864.16	10/09/93	55.46	863.64	11/17/93	55.50	863.60	12/27/93	55.46	863.64
07/11/93	54.95	864.15	10/10/93	55.49	863.61	11/17/93	55.49	863.61	12/27/93	55.52	863.58
07/11/93	54.99	864.11	10/10/93	55.44	863.66	11/18/93	55.50	863.60	12/28/93	55.52	863.58
07/12/93	54.99	864.11	10/11/93	55.41	863.69	11/18/93	55.45	863.65	12/28/93	55.48	863.62
07/12/93	55.02	864.08	10/11/93	55.44	863.66	11/19/93	55.45	863.65	12/29/93	55.49	863.61
07/13/93	55.01	864.09	10/12/93	55.41	863.69	11/19/93	55.45	863.65	12/29/93	55.48	863.62
07/13/93	55.02	864.08	10/12/93	55.43	863.67	11/20/93	55.45	863.65	12/30/93	55.49	863.61
07/14/93	55.06	864.04	10/13/93	55.43	863.67	11/20/93	55.45	863.65	12/30/93	55.43	863.67
07/14/93	55.02	864.08	10/13/93	55.43	863.67	11/21/93	55.42	863.68	12/31/93	55.43	863.67
07/15/93	55.06	864.04	10/14/93	55.43	863.67	11/21/93	55.48	863.62	12/31/93	55.38	863.72
07/15/93	54.86	864.24	10/14/93	55.43	863.67	11/22/93	55.52	863.58			
07/16/93	54.86	864.24	10/15/93	55.43	863.67	11/22/93	55.48	863.62	01/01/94	55.38	863.72
07/16/93	54.73	864.37	10/15/93	55.43	863.67	11/23/93	55.52	863.58	01/01/94	55.38	863.72
07/17/93	54.75	864.35	10/16/93	55.43	863.67	11/23/93	55.54	863.56	01/02/94	55.37	863.73
07/17/93	54.73	864.37	10/16/93	55.43	863.67	11/24/93	55.54	863.56	01/02/94	55.42	863.68
07/18/93	54.78	864.32	10/17/93	55.43	863.67	11/24/93	55.56	863.54	01/03/94	55.42	863.68
07/18/93	54.75	864.35	10/17/93	55.42	863.68	11/25/93	55.54	863.56	01/03/94	55.42	863.68
07/19/93	54.86	864.24	10/18/93	55.44	863.66	11/25/93	55.56	863.54	01/04/94	55.43	863.67
07/19/93	54.78	864.32	10/18/93	55.42	863.68	11/26/93	55.44	863.66	01/04/94	55.42	863.68
07/20/93	54.86	864.24	10/18/93	55.46	863.64	11/26/93	55.54	863.56	01/05/94	55.43	863.67
07/20/93	54.89	864.21	10/19/93	55.44	863.66	11/27/93	55.41	863.69	01/05/94	55.40	863.70
07/21/93	54.89	864.21	10/19/93	55.44	863.66	11/27/93	55.44	863.66	01/06/94	55.40	863.70
07/21/93	54.89	864.21	10/20/93	55.44	863.66	11/28/93	55.41	863.69	01/06/94	55.40	863.70
07/22/93	54.89	864.21	10/20/93	55.44	863.66	11/28/93	55.40	863.70	01/07/94	55.40	863.70
07/22/93	54.88	864.22	10/21/93	55.46	863.64	11/29/93	55.40	863.70	01/07/94	55.40	863.70
07/23/93	54.88	864.22	10/21/93	55.44	863.66	11/29/93	55.44	863.66	01/08/94	55.40	863.70
07/23/93	54.88	864.22	10/22/93	55.46	863.64	11/30/93	55.44	863.66	01/08/94	55.43	863.67
07/24/93	54.85	864.25	10/22/93	55.46	863.64	11/30/93	55.44	863.66	01/09/94	55.43	863.67
07/24/93	54.88	864.22	10/23/93	55.46	863.64	12/01/93	55.44	863.66	01/09/94	55.43	863.67
07/25/93	54.85	864.25	10/23/93	55.47	863.63	12/01/93	55.43	863.67	01/10/94	55.44	863.66
07/25/93	54.87	864.23	10/24/93	55.45	863.65	12/02/93	55.44	863.66	01/10/94	55.42	863.68
07/26/93	54.87	864.23	10/24/93	55.46	863.64	12/02/93	55.43	863.67	01/11/94	55.44	863.66
07/26/93	54.89	864.21	10/25/93	55.44	863.66	12/03/93	55.44	863.66	01/11/94	55.44	863.66
07/27/93	54.82	864.28	10/25/93	55.45	863.65	12/03/93	55.44	863.66	01/12/94	55.44	863.66
07/27/93	54.88	864.22	10/26/93	55.50	863.60	12/04/93	55.40	863.70	01/12/94	55.44	863.66
07/28/93	54.82	864.28	10/26/93	55.45	863.65	12/04/93	55.44	863.66	01/13/94	55.44	863.66
07/28/93	54.84	864.26	10/27/93	55.50	863.60	12/05/93	55.36	863.74	01/13/94	55.44	863.66
07/29/93	54.84	864.26	10/27/93	55.34	863.76	12/05/93	55.40	863.70	01/14/94	55.46	863.64

137-049-27BBC **(Continued)** MP Elev (msl,ft)=919.1

Horace Aquifer SI (ft.)=249-300

Date	Depth to Water (ft)	WL Elev (msl, ft)	Date	Depth to Water (ft)	WL Elev (msl, ft)	Date	Depth to Water (ft)	WL Elev (msl, ft)	Date	Depth to Water (ft)	WL Elev (msl, ft)
01/14/94	55.44	863.66	02/23/94	55.43	863.67	04/04/94	55.47	863.63	05/13/94	55.81	863.29
01/15/94	55.46	863.64	02/23/94	55.44	863.66	04/04/94	55.41	863.69	05/14/94	55.78	863.32
01/15/94	55.47	863.63	02/24/94	55.44	863.66	04/05/94	55.47	863.63	05/14/94	55.82	863.28
01/16/94	55.44	863.66	02/24/94	55.38	863.72	04/05/94	55.50	863.60	05/15/94	55.93	863.17
01/16/94	55.47	863.63	02/25/94	55.48	863.62	04/06/94	55.50	863.60	05/15/94	55.82	863.28
01/17/94	55.44	863.66	02/25/94	55.38	863.72	04/06/94	55.52	863.58	05/15/94	55.82	863.28
01/17/94	55.44	863.66	02/26/94	55.51	863.59	04/07/94	55.52	863.58	05/16/94	55.87	863.23
01/18/94	55.44	863.66	02/26/94	55.48	863.62	04/07/94	55.55	863.55	05/16/94	55.93	863.17
01/18/94	55.44	863.66	02/27/94	55.47	863.63	04/08/94	55.43	863.67	05/17/94	55.95	863.15
01/19/94	55.44	863.66	02/27/94	55.51	863.59	04/08/94	55.54	863.56	05/17/94	55.87	863.23
01/19/94	55.45	863.65	02/28/94	55.47	863.63	04/09/94	55.45	863.65	05/18/94	55.97	863.13
01/20/94	55.45	863.65	02/28/94	55.47	863.63	04/09/94	55.58	863.52	05/18/94	55.95	863.15
01/20/94	55.46	863.64	03/01/94	55.43	863.67	04/10/94	55.58	863.52	05/19/94	55.91	863.19
01/21/94	55.46	863.64	03/01/94	55.47	863.63	04/10/94	55.67	863.43	05/19/94	55.97	863.13
01/21/94	55.46	863.64	03/02/94	55.40	863.70	04/11/94	55.70	863.40	05/20/94	55.91	863.19
01/22/94	55.41	863.69	03/02/94	55.43	863.67	04/11/94	55.67	863.43	05/20/94	55.86	863.24
01/22/94	55.46	863.64	03/03/94	55.34	863.76	04/12/94	55.68	863.42	05/21/94	55.87	863.23
01/23/94	55.38	863.72	03/03/94	55.40	863.70	04/12/94	55.61	863.49	05/21/94	55.93	863.17
01/23/94	55.41	863.69	03/04/94	55.34	863.76	04/13/94	55.61	863.49	05/22/94	55.92	863.18
01/24/94	55.39	863.71	03/04/94	55.34	863.76	04/13/94	55.51	863.59	05/22/94	55.95	863.15
01/24/94	55.38	863.72	03/05/94	55.33	863.77	04/14/94	55.51	863.59	05/23/94	55.89	863.21
01/25/94	55.42	863.68	03/05/94	55.34	863.76	04/14/94	55.53	863.57	05/23/94	55.96	863.14
01/25/94	55.39	863.71	03/06/94	55.33	863.77	04/15/94	55.56	863.54	05/24/94	55.88	863.22
01/26/94	55.42	863.68	03/06/94	55.38	863.72	04/15/94	55.53	863.57	05/24/94	55.89	863.21
01/26/94	55.42	863.68	03/07/94	55.42	863.68	04/16/94	55.57	863.53	05/25/94	55.85	863.25
01/27/94	55.42	863.68	03/07/94	55.38	863.72	04/16/94	55.65	863.45	05/25/94	55.88	863.22
01/27/94	55.42	863.68	03/08/94	55.47	863.63	04/16/94	55.56	863.54	05/26/94	56.02	863.08
01/28/94	55.41	863.69	03/08/94	55.42	863.68	04/17/94	55.66	863.44	05/26/94	55.86	863.24
01/28/94	55.42	863.68	03/09/94	55.47	863.63	04/17/94	55.61	863.49	05/27/94	55.94	863.16
01/29/94	55.41	863.69	03/09/94	55.43	863.67	04/18/94	55.64	863.46	05/27/94	55.99	863.11
01/29/94	55.45	863.65	03/10/94	55.43	863.67	04/18/94	55.58	863.52	05/27/94	55.92	863.18
01/30/94	55.46	863.64	03/10/94	55.46	863.64	04/19/94	55.71	863.39	05/28/94	55.99	863.11
01/30/94	55.45	863.65	03/11/94	55.46	863.64	04/19/94	55.64	863.46	05/28/94	55.88	863.22
01/31/94	55.46	863.64	03/11/94	55.46	863.64	04/20/94	55.74	863.36	05/29/94	56.09	863.01
01/31/94	55.46	863.64	03/12/94	55.49	863.61	04/20/94	55.71	863.39	05/29/94	55.88	863.22
02/01/94	55.46	863.64	03/12/94	55.46	863.64	04/21/94	55.74	863.36	05/30/94	55.97	863.13
02/01/94	55.46	863.64	03/13/94	55.38	863.72	04/21/94	55.76	863.34	05/30/94	55.93	863.17
02/02/94	55.46	863.64	03/13/94	55.49	863.61	04/22/94	55.68	863.42	05/31/94	56.22	862.88
02/02/94	55.46	863.64	03/14/94	55.35	863.75	04/22/94	55.76	863.34	05/31/94	55.94	863.16
02/03/94	55.46	863.64	03/14/94	55.38	863.72	04/23/94	55.58	863.52	06/01/94	56.14	862.96
02/03/94	55.46	863.64	03/15/94	55.37	863.73	04/23/94	55.68	863.42	06/01/94	56.09	863.01
02/04/94	55.38	863.72	03/15/94	55.45	863.65	04/24/94	55.58	863.52	06/02/94	56.09	863.01
02/04/94	55.46	863.64	03/16/94	55.45	863.65	04/24/94	55.61	863.49	06/02/94	56.14	862.96
02/05/94	55.35	863.75	03/16/94	55.41	863.69	04/25/94	55.56	863.54	06/03/94	56.13	862.97
02/05/94	55.38	863.72	03/17/94	55.41	863.69	04/25/94	55.61	863.49	06/03/94	56.17	862.93
02/06/94	55.35	863.75	03/17/94	55.32	863.78	04/26/94	55.49	863.61	06/04/94	56.06	863.04
02/06/94	55.42	863.68	03/18/94	55.36	863.74	04/26/94	55.56	863.54	06/04/94	56.13	862.97
02/07/94	55.42	863.68	03/18/94	55.32	863.78	04/27/94	55.69	863.41	06/05/94	56.06	863.04
02/07/94	55.44	863.66	03/19/94	55.36	863.74	04/27/94	55.54	863.56	06/05/94	56.04	863.06
02/08/94	55.44	863.66	03/19/94	55.33	863.77	04/28/94	55.69	863.41	06/06/94	56.22	862.88
02/08/94	55.44	863.66	03/20/94	55.33	863.77	04/28/94	55.68	863.42	06/06/94	56.03	863.07
02/09/94	55.44	863.66	03/20/94	55.32	863.78	04/29/94	55.68	863.42	06/07/94	56.17	862.93
02/09/94	55.44	863.66	03/21/94	55.32	863.78	04/29/94	55.71	863.39	06/07/94	56.13	862.97
02/10/94	55.44	863.66	03/21/94	55.31	863.79	04/30/94	55.70	863.40	06/08/94	56.19	862.91
02/10/94	55.39	863.71	03/22/94	55.31	863.79	04/30/94	55.72	863.38	06/08/94	56.17	862.93
02/11/94	55.39	863.71	03/22/94	55.29	863.81	05/01/94	55.69	863.41	06/09/94	56.14	862.96
02/11/94	55.39	863.71	03/23/94	55.33	863.77	05/01/94	55.70	863.40	06/09/94	56.36	862.74
02/12/94	55.39	863.71	03/23/94	55.31	863.79	05/02/94	55.69	863.41	06/10/94	56.16	862.94
02/12/94	55.39	863.71	03/24/94	55.37	863.73	05/02/94	55.67	863.43	06/10/94	56.23	862.87
02/13/94	55.38	863.72	03/24/94	55.33	863.77	05/03/94	55.67	863.43	06/11/94	56.30	862.80
02/13/94	55.39	863.71	03/25/94	55.32	863.78	05/03/94	55.60	863.50	06/11/94	56.14	862.96
02/14/94	55.34	863.76	03/25/94	55.37	863.73	05/04/94	55.64	863.46	06/11/94	56.18	862.92
02/14/94	55.38	863.72	03/26/94	55.26	863.84	05/04/94	55.60	863.50	06/12/94	56.23	862.87
02/15/94	55.34	863.76	03/26/94	55.32	863.78	05/05/94	55.64	863.46	06/12/94	56.13	862.97
02/15/94	55.37	863.73	03/27/94	55.26	863.84	05/05/94	55.68	863.42	06/13/94	56.20	862.90
02/16/94	55.37	863.73	03/27/94	55.29	863.81	05/06/94	55.69	863.41	06/13/94	56.08	863.02
02/16/94	55.37	863.73	03/28/94	55.34	863.76	05/06/94	55.68	863.42	06/14/94	56.02	863.08
02/17/94	55.35	863.75	03/28/94	55.29	863.81	05/07/94	55.69	863.41	06/14/94	56.35	862.75
02/17/94	55.37	863.73	03/29/94	55.45	863.65	05/07/94	55.64	863.46	06/15/94	56.41	862.69
02/18/94	55.22	863.88	03/29/94	55.34	863.76	05/08/94	55.65	863.45	06/15/94	56.22	862.88
02/18/94	55.35	863.75	03/30/94	55.48	863.62	05/08/94	55.62	863.48	06/16/94	56.27	862.83
02/19/94	55.21	863.89	03/30/94	55.45	863.65	05/09/94	55.65	863.45	06/16/94	56.30	862.80
02/19/94	55.29	863.81	03/31/94	55.46	863.64	05/09/94	55.73	863.37	06/17/94	56.28	862.82
02/20/94	55.29	863.81	03/31/94	55.46	863.64	05/10/94	55.73	863.37	06/17/94	56.27	862.83
02/20/94	55.40	863.70	04/01/94	55.46	863.64	05/10/94	55.82	863.28	06/18/94	56.28	862.82
02/21/94	55.48	863.62	04/01/94	55.40	863.70	05/11/94	56.01	863.09	06/18/94	56.32	862.78
02/21/94	55.40	863.70	04/02/94	55.44	863.66	05/11/94	55.76	863.34	06/19/94	56.31	862.79
02/22/94	55.48	863.62	04/02/94	55.40	863.70	05/12/94	55.90	863.20	06/19/94	56.23	862.87
02/22/94	55.48	863.62	04/03/94	55.44	863.66	05/12/94	55.99	863.11	06/20/94	56.22	862.88
02/23/94	55.48	863.62	04/03/94	55.41	863.69	05/13/94	55.90	863.20	06/20/94	56.25	862.85

137-049-27BBC **(Continued)** MP Elev (msl,ft)=919.1

Horace Aquifer SI (ft.)=249-300

Date	Depth to Water (ft)	WL Elev (msl, ft)	Date	Depth to Water (ft)	WL Elev (msl, ft)	Date	Depth to Water (ft)	WL Elev (msl, ft)	Date	Depth to Water (ft)	WL Elev (msl, ft)
06/21/94	56.28	862.82	07/30/94	56.21	862.89	09/08/94	56.38	862.72	10/17/94	56.16	862.94
06/21/94	56.25	862.85	07/31/94	56.27	862.83	09/08/94	56.41	862.69	10/17/94	56.22	862.88
06/22/94	56.26	862.84	07/31/94	56.29	862.81	09/09/94	56.35	862.75	10/18/94	56.16	862.94
06/22/94	56.23	862.87	08/01/94	56.27	862.83	09/09/94	56.38	862.72	10/18/94	56.03	863.07
06/23/94	56.23	862.87	08/01/94	56.49	862.61	09/10/94	56.33	862.77	10/19/94	56.16	862.94
06/23/94	56.23	862.87	08/02/94	56.30	862.80	09/10/94	56.35	862.75	10/19/94	56.06	863.04
06/24/94	56.24	862.86	08/02/94	56.38	862.72	09/11/94	56.33	862.77	10/20/94	56.17	862.93
06/24/94	56.23	862.87	08/03/94	56.30	862.80	09/11/94	56.33	862.77	10/20/94	56.16	862.94
06/25/94	56.28	862.82	08/03/94	56.27	862.83	09/12/94	56.33	862.77	10/21/94	56.14	862.96
06/25/94	56.19	862.91	08/04/94	56.35	862.75	09/12/94	56.33	862.77	10/21/94	56.17	862.93
06/26/94	56.20	862.90	08/04/94	56.29	862.81	09/13/94	56.31	862.79	10/22/94	56.14	862.96
06/26/94	56.19	862.91	08/05/94	56.36	862.74	09/13/94	56.33	862.77	10/22/94	56.12	862.98
06/27/94	56.20	862.90	08/05/94	56.32	862.78	09/14/94	56.31	862.79	10/23/94	56.20	862.90
06/27/94	56.14	862.96	08/06/94	56.32	862.78	09/14/94	56.27	862.83	10/23/94	56.14	862.96
06/28/94	56.17	862.93	08/06/94	56.26	862.84	09/15/94	56.27	862.83	10/24/94	56.27	862.83
06/28/94	56.14	862.96	08/07/94	56.17	862.93	09/15/94	56.24	862.86	10/24/94	56.20	862.90
06/29/94	56.28	862.82	08/07/94	56.26	862.84	09/16/94	56.24	862.86	10/25/94	56.30	862.80
06/29/94	56.17	862.93	08/08/94	56.23	862.87	09/16/94	56.33	862.77	10/25/94	56.27	862.83
06/30/94	56.25	862.85	08/08/94	56.28	862.82	09/17/94	56.36	862.74	10/26/94	56.29	862.81
06/30/94	56.22	862.88	08/09/94	56.28	862.82	09/17/94	56.33	862.77	10/26/94	56.20	862.90
07/01/94	56.23	862.87	08/09/94	56.29	862.81	09/18/94	56.37	862.73	10/27/94	56.13	862.97
07/01/94	56.28	862.82	08/10/94	56.28	862.82	09/18/94	56.36	862.74	10/27/94	56.20	862.90
07/02/94	56.30	862.80	08/10/94	56.28	862.82	09/19/94	56.37	862.73	10/28/94	56.10	863.00
07/02/94	56.28	862.82	08/11/94	56.27	862.83	09/19/94	56.35	862.75	10/28/94	56.13	862.97
07/03/94	56.30	862.80	08/11/94	56.29	862.81	09/20/94	56.28	862.82	10/29/94	56.12	862.98
07/03/94	56.22	862.88	08/12/94	56.27	862.83	09/20/94	56.35	862.75	10/29/94	56.13	862.97
07/04/94	56.22	862.88	08/12/94	56.25	862.85	09/20/94	56.34	862.76	10/29/94	56.22	862.88
07/04/94	56.18	862.92	08/13/94	56.25	862.85	09/21/94	56.34	862.76	10/30/94	56.22	862.88
07/05/94	56.21	862.89	08/13/94	56.28	862.82	09/21/94	56.34	862.76	10/30/94	56.24	862.86
07/05/94	56.18	862.92	08/14/94	56.46	862.64	09/22/94	56.35	862.75	10/31/94	56.24	862.86
07/06/94	56.24	862.86	08/14/94	56.28	862.82	09/22/94	56.34	862.76	10/31/94	56.25	862.85
07/06/94	56.21	862.89	08/15/94	56.33	862.77	09/23/94	56.50	862.60	11/01/94	56.13	862.97
07/07/94	56.24	862.86	08/15/94	56.47	862.63	09/23/94	56.35	862.75	11/01/94	56.25	862.85
07/07/94	56.07	863.03	08/16/94	56.33	862.77	09/24/94	56.46	862.64	11/02/94	56.19	862.91
07/08/94	56.07	863.03	08/16/94	56.30	862.80	09/24/94	56.43	862.67	11/02/94	56.13	862.97
07/08/94	56.02	863.08	08/17/94	56.34	862.76	09/24/94	56.37	862.73	11/03/94	56.24	862.86
07/09/94	56.04	863.06	08/17/94	56.30	862.80	09/25/94	56.43	862.67	11/03/94	56.19	862.91
07/09/94	56.02	863.08	08/18/94	56.30	862.80	09/25/94	56.42	862.68	11/04/94	56.24	862.86
07/10/94	56.04	863.06	08/18/94	56.35	862.75	09/26/94	56.42	862.68	11/04/94	56.24	862.86
07/10/94	56.01	863.09	08/19/94	56.29	862.81	09/26/94	56.36	862.74	11/05/94	56.23	862.87
07/11/94	56.02	863.08	08/19/94	56.30	862.80	09/27/94	56.36	862.74	11/05/94	56.24	862.86
07/11/94	55.99	863.11	08/20/94	56.32	862.78	09/27/94	56.31	862.79	11/06/94	56.27	862.83
07/12/94	56.06	863.04	08/20/94	56.30	862.80	09/28/94	56.35	862.75	11/06/94	56.23	862.87
07/12/94	56.02	863.08	08/20/94	56.29	862.81	09/28/94	56.33	862.77	11/07/94	56.27	862.83
07/13/94	56.09	863.01	08/21/94	56.32	862.78	09/29/94	56.34	862.76	11/07/94	56.22	862.88
07/13/94	56.03	863.07	08/21/94	56.32	862.78	09/29/94	56.35	862.75	11/08/94	56.28	862.82
07/14/94	56.04	863.06	08/22/94	56.32	862.78	09/30/94	56.35	862.75	11/08/94	56.22	862.88
07/14/94	56.03	863.07	08/22/94	56.27	862.83	09/30/94	56.34	862.76	11/09/94	56.32	862.78
07/15/94	56.03	863.07	08/23/94	56.27	862.83	10/01/94	56.38	862.72	11/09/94	56.28	862.82
07/15/94	56.05	863.05	08/23/94	56.18	862.92	10/01/94	56.35	862.75	11/10/94	56.35	862.75
07/16/94	56.05	863.05	08/24/94	56.24	862.86	10/02/94	56.38	862.72	11/10/94	56.30	862.80
07/16/94	56.07	863.03	08/24/94	56.20	862.90	10/02/94	56.35	862.75	11/11/94	56.25	862.85
07/17/94	56.10	863.00	08/25/94	56.26	862.84	10/03/94	56.37	862.73	11/11/94	56.30	862.80
07/17/94	56.07	863.03	08/25/94	56.24	862.86	10/03/94	56.34	862.76	11/12/94	56.25	862.85
07/18/94	56.10	863.00	08/26/94	56.26	862.84	10/04/94	56.40	862.70	11/12/94	56.11	862.99
07/18/94	56.05	863.05	08/26/94	56.24	862.86	10/04/94	56.37	862.73	11/13/94	56.07	863.03
07/19/94	56.05	863.05	08/27/94	56.26	862.84	10/05/94	56.29	862.81	11/13/94	56.11	862.99
07/19/94	56.06	863.04	08/27/94	56.22	862.88	10/05/94	56.40	862.70	11/14/94	56.24	862.86
07/20/94	56.01	863.09	08/28/94	56.25	862.85	10/06/94	56.17	862.93	11/14/94	56.10	863.00
07/20/94	56.06	863.04	08/28/94	56.26	862.84	10/06/94	56.29	862.81	11/14/94	56.22	862.88
07/21/94	56.01	863.09	08/29/94	56.26	862.84	10/07/94	56.13	862.97	11/15/94	56.26	862.84
07/21/94	55.98	863.12	08/29/94	56.26	862.84	10/07/94	56.23	862.87	11/15/94	56.24	862.86
07/22/94	55.97	863.13	08/30/94	56.31	862.79	10/08/94	56.23	862.87	11/16/94	56.26	862.84
07/22/94	55.98	863.12	08/30/94	56.26	862.84	10/08/94	56.29	862.81	11/16/94	56.13	862.97
07/23/94	55.98	863.12	08/31/94	56.31	862.79	10/09/94	56.29	862.81	11/17/94	56.13	862.97
07/23/94	55.97	863.13	08/31/94	56.37	862.73	10/09/94	56.33	862.77	11/17/94	56.00	863.10
07/24/94	55.89	863.21	09/01/94	56.40	862.70	10/10/94	56.30	862.80	11/18/94	56.21	862.89
07/24/94	55.99	863.11	09/01/94	56.37	862.73	10/10/94	56.34	862.76	11/18/94	55.98	863.12
07/24/94	55.98	863.12	09/02/94	56.40	862.70	10/11/94	56.29	862.81	11/19/94	56.23	862.87
07/25/94	55.99	863.11	09/02/94	56.40	862.70	10/11/94	56.30	862.80	11/19/94	56.21	862.89
07/25/94	56.03	863.07	09/03/94	56.33	862.77	10/12/94	56.29	862.81	11/20/94	56.23	862.87
07/26/94	56.03	863.07	09/03/94	56.40	862.70	10/12/94	56.29	862.81	11/20/94	56.10	863.00
07/26/94	56.12	862.98	09/04/94	56.31	862.79	10/13/94	56.29	862.81	11/21/94	56.21	862.89
07/27/94	56.12	862.98	09/04/94	56.33	862.77	10/13/94	56.32	862.78	11/21/94	56.09	863.01
07/27/94	56.18	862.92	09/05/94	56.36	862.74	10/14/94	56.29	862.81	11/22/94	56.21	862.89
07/28/94	56.18	862.92	09/05/94	56.31	862.79	10/14/94	56.32	862.78	11/22/94	56.23	862.87
07/28/94	56.21	862.89	09/06/94	56.36	862.74	10/15/94	56.30	862.80	11/23/94	56.24	862.86
07/29/94	56.21	862.89	09/06/94	56.52	862.58	10/15/94	56.29	862.81	11/23/94	56.19	862.91
07/29/94	56.22	862.88	09/07/94	56.46	862.64	10/16/94	56.22	862.88	11/24/94	56.19	862.91
07/30/94	56.38	862.72	09/07/94	56.41	862.69	10/16/94	56.29	862.81	11/24/94	56.20	862.90

137-049-27BBC **(Continued)** MP Elev (msl,ft)=919.1

Horace Aquifer SI (ft.)=249-300

Date	Depth to Water (ft)	WL Elev (msl, ft)
11/25/94	56.25	862.85
11/25/94	56.20	862.90
11/26/94	56.29	862.81
11/26/94	56.25	862.85
11/26/94	56.19	862.91
11/27/94	56.19	862.91
11/27/94	56.04	863.06
11/28/94	56.09	863.01
11/28/94	56.02	863.08
11/29/94	56.17	862.93
11/29/94	56.09	863.01
11/30/94	56.15	862.95
11/30/94	56.17	862.93
12/01/94	56.15	862.95
12/01/94	56.10	863.00
12/02/94	56.11	862.99
12/02/94	56.12	862.98
12/03/94	56.12	862.98
12/03/94	56.18	862.92
12/04/94	56.27	862.83
12/04/94	56.18	862.92
12/05/94	56.32	862.78
12/05/94	56.27	862.83
12/06/94	56.33	862.77
12/06/94	56.31	862.79
12/07/94	56.32	862.78
12/07/94	56.31	862.79
12/08/94	56.29	862.81
12/08/94	56.32	862.78
12/09/94	56.25	862.85
12/09/94	56.29	862.81
12/10/94	56.24	862.86
12/10/94	56.31	862.79
12/11/94	56.31	862.79
12/11/94	56.27	862.83
12/12/94	56.31	862.79
12/12/94	56.26	862.84
12/13/94	56.32	862.78
12/13/94	56.31	862.79
12/14/94	56.32	862.78
12/14/94	56.30	862.80
12/15/94	56.30	862.80
12/15/94	56.24	862.86
12/16/94	56.24	862.86
12/16/94	56.19	862.91
12/17/94	56.28	862.82
12/17/94	56.19	862.91
12/18/94	56.28	862.82
12/18/94	56.24	862.86
12/19/94	56.19	862.91
12/19/94	56.24	862.86
12/20/94	56.19	862.91
12/20/94	56.23	862.87
12/21/94	56.22	862.88
12/21/94	56.23	862.87
12/22/94	56.28	862.82
12/22/94	56.23	862.87
12/23/94	56.28	862.82
12/23/94	56.27	862.83
12/24/94	56.23	862.87
12/24/94	56.27	862.83
12/25/94	56.23	862.87
12/25/94	56.22	862.88
12/26/94	56.22	862.88
12/26/94	56.21	862.89
12/27/94	56.18	862.92
12/27/94	56.24	862.86
12/28/94	56.24	862.86
12/28/94	56.31	862.79
12/29/94	56.27	862.83
12/29/94	56.31	862.79
12/30/94	56.27	862.83
12/30/94	56.31	862.79
01/02/95	56.32	862.78
01/02/95	56.28	862.82
01/03/95	56.37	862.73
01/03/95	56.32	862.78
01/04/95	56.29	862.81
01/04/95	56.37	862.73
01/05/95	56.14	862.96
01/05/95	56.29	862.81
01/06/95	56.20	862.90
01/06/95	56.14	862.96
01/07/95	56.15	862.95
01/07/95	56.20	862.90
01/08/95	56.18	862.92
01/08/95	56.26	862.84
01/09/95	56.26	862.84
01/09/95	56.27	862.83
01/10/95	56.18	862.92
01/10/95	56.27	862.83
01/11/95	56.18	862.92
01/11/95	56.11	862.99
01/12/95	56.14	862.96
01/12/95	56.11	862.99
01/13/95	56.14	862.96
01/13/95	56.21	862.89
01/14/95	56.21	862.89
01/14/95	56.21	862.89
01/15/95	56.19	862.91
01/15/95	56.21	862.89
01/16/95	56.19	862.91
01/16/95	56.12	862.98
01/17/95	56.02	863.08
01/17/95	56.12	862.98
01/18/95	56.07	863.03
01/18/95	56.18	862.92
01/19/95	56.18	862.92
01/19/95	56.22	862.88
01/20/95	56.22	862.88
01/20/95	56.24	862.86
01/21/95	56.24	862.86
01/21/95	56.24	862.86
01/22/95	56.24	862.86
01/22/95	56.24	862.86
01/23/95	56.24	862.86
01/23/95	56.24	862.86
01/24/95	56.24	862.86
01/24/95	56.27	862.83
01/25/95	56.27	862.83
01/25/95	56.29	862.81
01/26/95	56.22	862.88
01/26/95	56.29	862.81
01/27/95	56.18	862.92
01/27/95	56.22	862.88
01/28/95	56.22	862.88
01/28/95	56.29	862.81
01/29/95	56.29	862.81
01/29/95	56.32	862.78
01/30/95	56.32	862.78
01/30/95	56.15	862.95
01/31/95	56.15	862.95
01/31/95	56.12	862.98
02/01/95	56.16	862.94
02/01/95	56.13	862.97
02/02/95	56.16	862.94
02/02/95	56.17	862.93
02/03/95	56.27	862.83
02/03/95	56.17	862.93
02/04/95	56.27	862.83
02/04/95	56.29	862.81
02/05/95	56.29	862.81
02/05/95	56.31	862.79
02/06/95	56.26	862.84
02/06/95	56.30	862.80
02/07/95	56.26	862.84
02/07/95	56.33	862.77
02/08/95	56.22	862.88
02/08/95	56.33	862.77
02/09/95	56.22	862.88
02/09/95	56.06	863.04
02/10/95	56.18	862.92
02/10/95	56.07	863.03
02/11/95	56.18	862.92
02/11/95	56.25	862.85
02/12/95	56.28	862.82
02/12/95	56.25	862.85
02/13/95	56.28	862.82
02/13/95	56.28	862.82
02/14/95	56.28	862.82
02/14/95	56.14	862.96
02/15/95	56.14	862.96
02/15/95	56.20	862.90
02/16/95	56.20	862.90
02/16/95	56.21	862.89
02/17/95	56.18	862.92
02/17/95	56.21	862.89
02/18/95	56.15	862.95
02/18/95	56.25	862.85
02/19/95	56.16	862.94
02/19/95	56.26	862.84
02/20/95	56.16	862.94
02/20/95	56.27	862.83
02/21/95	56.27	862.83
02/21/95	56.17	862.93
02/22/95	56.17	862.93
02/22/95	56.17	862.93
02/23/95	56.17	862.93
02/23/95	56.27	862.83
02/24/95	56.25	862.85
02/24/95	56.27	862.83
02/25/95	56.25	862.85
02/25/95	56.22	862.88
02/26/95	56.23	862.87
02/26/95	56.28	862.82
02/27/95	56.37	862.73
02/27/95	56.28	862.82
02/28/95	56.37	862.73
02/28/95	56.40	862.70
03/01/95	56.40	862.70
03/01/95	56.43	862.67
03/02/95	56.43	862.67
03/02/95	56.31	862.79
03/03/95	56.33	862.77
03/03/95	56.28	862.82
03/04/95	56.31	862.79
03/04/95	56.33	862.77
03/05/95	56.28	862.82
03/05/95	56.31	862.79
03/06/95	56.28	862.82
03/06/95	56.25	862.85
03/07/95	56.25	862.85
03/07/95	56.30	862.80
03/08/95	56.30	862.80
03/08/95	56.35	862.75
03/09/95	56.22	862.88
03/09/95	56.35	862.75
03/10/95	56.22	862.88
03/10/95	56.14	862.96
03/11/95	56.14	862.96
03/11/95	56.10	863.00
03/12/95	56.06	863.04
03/12/95	56.10	863.00
03/13/95	56.16	862.94
03/13/95	56.06	863.04
03/14/95	56.16	862.94
03/14/95	56.23	862.87
03/15/95	56.23	862.87
03/15/95	56.15	862.95
03/16/95	56.15	862.95
03/16/95	56.05	863.05
03/17/95	56.05	863.05
03/17/95	56.06	863.04
03/18/95	56.05	863.05
03/18/95	55.97	863.13
03/19/95	55.91	863.19
03/19/95	55.97	863.13
03/20/95	55.91	863.19
03/20/95	55.94	863.16
03/21/95	56.02	863.08
03/21/95	55.94	863.16
03/22/95	56.09	863.01
03/22/95	56.02	863.08
03/23/95	56.22	862.88
03/23/95	56.09	863.01
03/24/95	56.23	862.87
03/24/95	56.22	862.88
03/25/95	56.23	862.87
03/25/95	56.21	862.89
03/26/95	56.21	862.89
03/26/95	56.12	862.98
03/27/95	56.12	862.98
03/27/95	56.04	863.06
03/28/95	56.04	863.06
03/28/95	56.05	863.05
03/29/95	56.05	863.05
03/29/95	56.01	863.09
03/30/95	56.01	863.09
03/30/95	56.00	863.10
03/31/95	55.94	863.16
03/31/95	56.00	863.10
04/01/95	55.93	863.17
04/01/95	55.94	863.16
04/02/95	55.96	863.14
04/02/95	55.94	863.16
04/03/95	55.96	863.14
04/03/95	56.19	862.91
04/04/95	56.27	862.83
04/04/95	56.19	862.91
04/05/95	56.27	862.83
04/05/95	56.19	862.91
04/06/95	56.20	862.90
04/06/95	56.29	862.81
04/07/95	56.29	862.81
04/07/95	56.29	862.81
04/08/95	56.29	862.81
04/08/95	56.29	862.81
04/09/95	56.29	862.81
04/09/95	56.33	862.77
04/10/95	56.35	862.75
04/10/95	56.33	862.77
04/11/95	56.34	862.76
04/11/95	56.20	862.90
04/12/95	56.22	862.88
04/12/95	56.18	862.92
04/13/95	56.22	862.88
04/13/95	56.26	862.84
04/14/95	56.26	862.84
04/14/95	56.20	862.90
04/15/95	56.18	862.92
04/15/95	56.20	862.90
04/16/95	56.22	862.88
04/16/95	56.18	862.92
04/17/95	56.22	862.88
04/17/95	56.25	862.85
04/18/95	56.23	862.87
04/18/95	56.16	862.94
04/19/95	56.19	862.91
04/19/95	56.26	862.84
04/20/95	56.26	862.84
04/20/95	56.24	862.86
04/21/95	56.24	862.86
04/21/95	56.29	862.81
04/22/95	56.29	862.81
04/22/95	56.34	862.76
04/23/95	56.34	862.76
04/23/95	56.31	862.79
04/24/95	56.30	862.80
04/24/95	56.31	862.79
04/25/95	56.30	862.80
04/25/95	56.30	862.80
04/26/95	56.30	862.80
04/26/95	56.30	862.80
04/27/95	56.30	862.80
04/27/95	56.30	862.80
04/28/95	56.30	862.80
04/28/95	56.31	862.79
04/29/95	56.33	862.77
04/29/95	56.31	862.79
04/30/95	56.33	862.77
04/30/95	56.37	862.73
04/30/95	56.60	862.50
05/01/95	56.35	862.75
05/01/95	56.36	862.74
05/02/95	56.32	862.78
05/02/95	56.35	862.75
05/03/95	56.32	862.78
05/03/95	56.32	862.78
05/04/95	56.32	862.78

137-049-27BBC **(Continued)** MP Elev (msl,ft)=919.1

Horace Aquifer SI (ft.)=249-300

Date	Depth to Water (ft)	WL Elev (msl, ft)	Date	Depth to Water (ft)	WL Elev (msl, ft)	Date	Depth to Water (ft)	WL Elev (msl, ft)	Date	Depth to Water (ft)	WL Elev (msl, ft)
05/04/95	56.35	862.75	05/13/95	56.11	862.99	05/22/95	56.32	862.78	05/31/95	56.66	862.44
05/05/95	56.39	862.71	05/14/95	56.19	862.91	05/23/95	56.48	862.62	05/31/95	56.43	862.67
05/05/95	56.35	862.75	05/14/95	56.09	863.01	05/23/95	56.39	862.71	06/01/95	56.65	862.45
05/06/95	56.32	862.78	05/15/95	56.14	862.96	05/24/95	56.42	862.68	06/01/95	56.48	862.62
05/06/95	56.38	862.72	05/15/95	56.21	862.89	05/24/95	56.43	862.67	07/01/95	56.88	862.22
05/07/95	56.30	862.80	05/16/95	56.11	862.99	05/25/95	56.44	862.66	08/05/95	57.95	861.15
05/07/95	56.32	862.78	05/16/95	56.18	862.92	05/25/95	56.42	862.68	09/09/95	57.91	861.19
05/08/95	56.30	862.80	05/17/95	56.18	862.92	05/26/95	56.44	862.66	10/28/95	56.76	862.34
05/08/95	56.23	862.87	05/17/95	56.26	862.84	05/26/95	56.42	862.68	11/21/95	56.88	862.22
05/09/95	56.23	862.87	05/18/95	56.22	862.88	05/27/95	56.37	862.73			
05/09/95	56.21	862.89	05/18/95	56.25	862.85	05/27/95	56.42	862.68	06/04/96	56.67	862.43
05/10/95	56.24	862.86	05/19/95	56.25	862.85	05/28/95	56.36	862.74	06/30/96	56.91	862.19
05/10/95	56.21	862.89	05/19/95	56.38	862.72	05/28/95	56.37	862.73	07/28/96	57.23	861.87
05/11/95	56.19	862.91	05/20/95	56.32	862.78	05/28/95	56.55	862.55	08/25/96	57.44	861.66
05/11/95	56.24	862.86	05/20/95	56.33	862.77	05/29/95	56.36	862.74	10/05/96	57.40	861.70
05/12/95	56.11	862.99	05/21/95	56.34	862.76	05/29/95	56.50	862.60	11/02/96	57.29	861.81
05/12/95	56.19	862.91	05/21/95	56.32	862.78	05/30/95	56.53	862.57			
05/13/95	56.05	863.05	05/22/95	56.43	862.67	05/30/95	56.43	862.67			

138-049-22BBA2
West Fargo South Aquifer

MP Elev (msl,ft)=909.9
SI (ft.)=245-250

Date	Depth to Water (ft)	WL Elev (msl, ft)
04/18/83	57.54	852.36
05/11/83	57.78	852.12
05/11/83	57.72	852.18
05/12/83	57.67	852.23
05/12/83	57.72	852.18
05/13/83	57.69	852.21
05/13/83	57.75	852.15
05/14/83	57.75	852.15
05/14/83	57.79	852.11
05/15/83	57.77	852.13
05/15/83	57.79	852.11
05/16/83	57.81	852.09
05/16/83	57.79	852.11
05/17/83	57.80	852.10
05/17/83	57.79	852.11
05/18/83	57.79	852.11
05/18/83	57.77	852.13
05/19/83	57.79	852.11
05/19/83	57.81	852.09
05/19/83	57.76	852.14
05/20/83	57.79	852.11
05/20/83	57.76	852.14
05/21/83	57.71	852.19
05/21/83	57.75	852.15
05/22/83	57.77	852.13
05/22/83	57.73	852.17
05/23/83	57.77	852.13
05/23/83	57.78	852.12
05/24/83	57.77	852.13
05/24/83	57.85	852.05
05/25/83	57.86	852.04
05/25/83	57.84	852.06
05/26/83	57.84	852.06
05/26/83	57.80	852.10
05/27/83	57.80	852.10
05/27/83	57.87	852.03
05/28/83	57.89	852.01
05/28/83	57.85	852.05
05/29/83	57.91	851.99
05/29/83	57.89	852.01
05/30/83	57.90	852.00
05/30/83	57.89	852.01
05/31/83	57.90	852.00
05/31/83	57.90	852.00
06/01/83	57.90	852.00
06/01/83	57.90	852.00
06/02/83	57.90	852.00
06/02/83	57.95	851.95
06/02/83	57.92	851.98
06/03/83	57.94	851.96
06/03/83	57.92	851.98
06/04/83	58.01	851.89
06/04/83	57.94	851.96
06/05/83	58.03	851.87
06/05/83	58.01	851.89
06/06/83	58.03	851.87
06/06/83	58.02	851.88
06/07/83	58.03	851.87
06/07/83	58.04	851.86
06/08/83	58.09	851.81
06/08/83	58.04	851.86
06/09/83	58.13	851.77
06/09/83	58.09	851.81
06/10/83	58.14	851.76
06/10/83	58.13	851.77
06/11/83	58.15	851.75
06/11/83	58.13	851.77
06/12/83	58.15	851.75
06/12/83	58.13	851.77
06/13/83	58.20	851.70
06/13/83	58.12	851.78
06/14/83	58.21	851.69
06/14/83	58.20	851.70
06/15/83	58.26	851.64
06/15/83	58.20	851.70
06/16/83	58.32	851.58
06/16/83	58.26	851.64
06/17/83	58.32	851.58
06/17/83	58.32	851.58
06/18/83	58.32	851.58
06/18/83	58.32	851.58
06/19/83	58.32	851.58
06/19/83	58.31	851.59
06/20/83	58.33	851.57
06/20/83	58.31	851.59
06/21/83	58.33	851.57
06/21/83	58.35	851.55
06/21/83	58.33	851.57
07/25/83	59.54	850.36
07/25/83	59.51	850.39
07/26/83	59.54	850.36
07/26/83	59.61	850.29
07/27/83	59.73	850.17
07/27/83	59.61	850.29
07/28/83	59.74	850.16
07/28/83	59.83	850.07
07/28/83	59.86	850.04
07/29/83	59.87	850.03
07/29/83	59.87	850.03
07/30/83	59.97	849.93
07/30/83	59.87	850.03
07/31/83	59.98	849.92
07/31/83	60.06	849.84
08/01/83	60.13	849.77
08/01/83	60.07	849.83
08/02/83	60.13	849.77
08/02/83	60.24	849.66
08/03/83	60.25	849.65
08/03/83	60.35	849.55
08/04/83	60.36	849.54
08/04/83	60.45	849.45
08/05/83	60.58	849.32
08/05/83	60.45	849.45
08/06/83	60.58	849.32
08/06/83	60.66	849.24
08/07/83	60.83	849.07
08/07/83	60.66	849.24
08/08/83	60.93	848.97
08/08/83	60.83	849.07
08/09/83	60.94	848.96
08/09/83	61.05	848.85
08/10/83	61.21	848.69
08/10/83	61.06	848.84
08/11/83	61.22	848.68
08/11/83	61.31	848.59
08/12/83	61.32	848.58
08/12/83	61.46	848.44
08/13/83	61.47	848.43
08/13/83	61.61	848.29
08/14/83	61.62	848.28
08/14/83	61.74	848.16
08/15/83	61.89	848.01
08/15/83	61.75	848.15
08/16/83	62.00	847.90
08/16/83	61.90	848.00
08/17/83	62.01	847.89
08/17/83	62.14	847.76
08/18/83	62.14	847.76
08/18/83	62.29	847.61
08/18/83	62.21	847.69
08/19/83	62.30	847.60
08/19/83	62.46	847.44
08/20/83	62.47	847.43
08/20/83	62.52	847.38
08/21/83	62.53	847.37
08/21/83	62.70	847.20
08/22/83	62.84	847.06
08/22/83	62.71	847.19
08/23/83	62.85	847.05
08/23/83	62.98	846.92
08/24/83	62.98	846.92
08/24/83	63.15	846.75
08/25/83	63.14	846.76
08/25/83	63.25	846.65
08/26/83	63.35	846.55
08/26/83	63.25	846.65
08/27/83	63.36	846.54
08/27/83	63.45	846.45
08/28/83	63.54	846.36
08/28/83	63.45	846.45
08/29/83	63.61	846.29
08/29/83	63.54	846.36
08/30/83	63.62	846.28
08/30/83	63.75	846.15
08/31/83	63.75	846.15
08/31/83	63.84	846.06
09/01/83	63.84	846.06
09/01/83	63.92	845.98
09/02/83	63.92	845.98
09/02/83	63.97	845.93
09/03/83	63.97	845.93
09/03/83	64.04	845.86
09/04/83	64.04	845.86
09/04/83	64.10	845.80
09/05/83	64.15	845.75
09/05/83	64.10	845.80
09/06/83	64.15	845.75
09/06/83	64.27	845.63
09/07/83	64.28	845.62
09/07/83	64.34	845.56
09/08/83	64.34	845.56
09/08/83	64.43	845.47
09/09/83	64.44	845.46
09/09/83	64.52	845.38
09/10/83	64.55	845.35
09/10/83	64.63	845.27
09/11/83	64.71	845.19
09/11/83	64.64	845.26
09/12/83	64.71	845.19
09/12/83	64.81	845.09
09/13/83	64.88	845.02
09/13/83	64.81	845.09
09/14/83	64.88	845.02
09/14/83	64.91	844.99
09/15/83	64.91	844.99
09/15/83	64.92	844.98
09/15/83	64.90	845.00
09/16/83	64.95	844.95
09/16/83	64.91	844.99
09/17/83	64.95	844.95
09/17/83	64.95	844.95
09/18/83	65.05	844.85
09/18/83	64.95	844.95
09/19/83	65.16	844.74
09/19/83	65.05	844.85
09/20/83	65.24	844.66
09/20/83	65.16	844.74
09/21/83	65.24	844.66
09/21/83	65.26	844.64
09/22/83	65.26	844.64
09/22/83	65.35	844.55
09/23/83	65.35	844.55
09/23/83	65.36	844.54
09/24/83	65.39	844.51
09/24/83	65.36	844.54
09/25/83	65.40	844.50
09/25/83	65.45	844.45
09/26/83	65.50	844.40
09/26/83	65.45	844.45
09/27/83	65.50	844.40
09/27/83	65.51	844.39
09/28/83	65.51	844.39
09/28/83	65.66	844.24
09/29/83	65.69	844.21
09/29/83	65.66	844.24
09/30/83	65.66	844.24
09/30/83	65.70	844.20
10/01/83	65.66	844.24
10/02/83	65.67	844.23
10/03/83	65.75	844.15
10/04/83	65.75	844.15
10/04/83	65.77	844.13
10/05/83	65.87	844.03
10/05/83	65.77	844.13
10/06/83	65.88	844.02
10/06/83	65.90	844.00
10/07/83	65.89	844.01
10/07/83	65.99	843.91
10/08/83	66.05	843.85
10/08/83	65.99	843.91
10/09/83	66.04	843.86
10/09/83	66.06	843.84
10/10/83	66.00	843.90
10/10/83	66.04	843.86
10/11/83	66.01	843.89
10/11/83	66.10	843.80
10/11/83	66.17	843.73
10/12/83	66.10	843.80
10/12/83	66.14	843.76
10/13/83	66.14	843.76
10/13/83	66.14	843.76
10/14/83	66.14	843.76
10/14/83	66.19	843.71
10/15/83	66.17	843.73
10/15/83	66.19	843.71
10/16/83	66.17	843.73
10/16/83	66.24	843.66
10/17/83	66.24	843.66
10/17/83	66.27	843.63
10/18/83	66.27	843.63
10/18/83	66.30	843.60
10/19/83	66.33	843.57
10/19/83	66.30	843.60
10/20/83	66.36	843.54
10/20/83	66.33	843.57
10/21/83	66.38	843.52
10/21/83	66.37	843.53
10/22/83	66.39	843.51
10/22/83	66.39	843.51
10/23/83	66.40	843.50
10/23/83	66.39	843.51
10/24/83	66.51	843.39
10/24/83	66.40	843.50
10/25/83	66.52	843.38
10/25/83	66.49	843.41
10/26/83	66.53	843.37
10/26/83	66.50	843.40
10/27/83	66.51	843.39
10/27/83	66.49	843.41
10/28/83	66.66	843.24
10/28/83	66.50	843.40
10/29/83	66.67	843.23
10/29/83	66.70	843.20
10/30/83	66.69	843.21
10/30/83	66.68	843.22
10/31/83	66.69	843.21
10/31/83	66.68	843.22
11/01/83	66.75	843.15
11/01/83	66.69	843.21
11/02/83	66.85	843.05
11/02/83	66.75	843.15
11/03/83	66.89	843.01
11/03/83	66.85	843.05
11/04/83	66.89	843.01
11/04/83	66.87	843.03
11/05/83	66.89	843.01
11/05/83	66.86	843.04
11/06/83	66.90	843.00
11/06/83	66.89	843.01
11/07/83	66.93	842.97
11/07/83	66.87	843.03
11/08/83	67.03	842.87
11/08/83	66.95	842.95
11/09/83	67.08	842.82
11/09/83	67.04	842.86
11/10/83	67.10	842.80
11/10/83	67.08	842.82
11/11/83	67.11	842.79
11/11/83	67.10	842.80
11/12/83	67.10	842.80
11/12/83	67.06	842.84
11/13/83	67.06	842.84
11/13/83	67.04	842.86
11/14/83	67.16	842.74
11/14/83	67.04	842.86
11/15/83	67.22	842.68
11/15/83	67.16	842.74
11/16/83	67.23	842.67
11/16/83	67.22	842.68
11/17/83	67.22	842.68

138-049-22BBA2 **(Continued)** MP Elev (msl,ft)=909.9

West Fargo South Aquifer SI (ft.)=245-250

Date	Depth to Water (ft)	WL Elev (msl, ft)	Date	Depth to Water (ft)	WL Elev (msl, ft)	Date	Depth to Water (ft)	WL Elev (msl, ft)	Date	Depth to Water (ft)	WL Elev (msl, ft)
11/17/83	67.17	842.73	12/27/83	67.98	841.92	02/04/84	69.44	840.46	03/26/84	71.56	838.34
11/18/83	67.22	842.68	12/27/83	67.97	841.93	02/15/84	69.71	840.19	03/26/84	71.53	838.37
11/18/83	67.18	842.72	12/28/83	67.98	841.92	02/16/84	69.72	840.18	03/27/84	71.55	838.35
11/19/83	67.22	842.68	12/28/83	68.03	841.87	02/16/84	69.71	840.19	03/27/84	71.61	838.29
11/19/83	67.15	842.75	12/29/83	68.04	841.86	02/17/84	69.77	840.13	03/28/84	71.61	838.29
11/20/83	67.18	842.72	12/29/83	68.17	841.73	02/17/84	69.72	840.18	03/28/84	71.67	838.23
11/20/83	67.12	842.78	12/30/83	68.18	841.72	02/18/84	69.78	840.12	03/29/84	71.67	838.23
11/21/83	67.33	842.57	12/30/83	68.20	841.70	02/18/84	69.77	840.13	03/29/84	71.75	838.15
11/21/83	67.19	842.71	12/31/83	68.19	841.71	02/19/84	69.79	840.11	03/30/84	71.81	838.09
11/22/83	67.34	842.56	12/31/83	68.13	841.77	02/19/84	69.78	840.12	03/30/84	71.76	838.14
11/22/83	67.33	842.57				02/20/84	69.79	840.11	03/31/84	71.81	838.09
11/23/83	67.33	842.57	01/01/84	68.30	841.60	02/20/84	69.88	840.02	03/31/84	71.84	838.06
11/23/83	67.27	842.63	01/01/84	68.19	841.71	02/21/84	69.88	840.02	04/01/84	71.88	838.02
11/24/83	67.31	842.59	01/02/84	68.32	841.58	02/21/84	69.89	840.01	04/01/84	71.84	838.06
11/24/83	67.28	842.62	01/02/84	68.29	841.61	02/22/84	69.89	840.01	04/02/84	71.96	837.94
11/25/83	67.39	842.51	01/03/84	68.33	841.57	02/22/84	69.88	840.02	04/02/84	71.88	838.02
11/25/83	67.31	842.59	01/03/84	68.30	841.60	02/23/84	69.90	840.00	04/03/84	71.96	837.94
11/26/83	67.52	842.38	01/04/84	68.35	841.55	02/23/84	70.00	839.90	04/03/84	72.01	837.89
11/26/83	67.40	842.50	01/04/84	68.27	841.63	02/24/84	70.00	839.90	04/04/84	72.01	837.89
11/27/83	67.54	842.36	01/05/84	68.33	841.57	02/24/84	70.09	839.81	04/04/84	72.05	837.85
11/27/83	67.50	842.40	01/05/84	68.39	841.51	02/25/84	70.09	839.81	04/05/84	72.09	837.81
11/28/83	67.49	842.41	01/06/84	68.39	841.51	02/25/84	70.17	839.73	04/05/84	72.05	837.85
11/28/83	67.41	842.49	01/06/84	68.43	841.47	02/26/84	70.17	839.73	04/06/84	72.15	837.75
11/29/83	67.42	842.48	01/07/84	68.53	841.37	02/26/84	70.26	839.64	04/06/84	72.10	837.80
11/29/83	67.50	842.40	01/07/84	68.44	841.46	02/27/84	70.26	839.64	04/07/84	72.25	837.65
11/30/83	67.56	842.34	01/08/84	68.53	841.37	02/27/84	70.32	839.58	04/07/84	72.16	837.74
11/30/83	67.50	842.40	01/08/84	68.56	841.34	02/28/84	70.32	839.58	04/08/84	72.25	837.65
12/01/83	67.56	842.34	01/09/84	68.59	841.31	02/28/84	70.33	839.57	04/08/84	72.30	837.60
12/01/83	67.55	842.35	01/09/84	68.70	841.20	02/29/84	70.33	839.57	04/09/84	72.35	837.55
12/02/83	67.58	842.32	01/10/84	68.70	841.20	02/29/84	70.30	839.60	04/09/84	72.30	837.60
12/02/83	67.55	842.35	01/10/84	68.67	841.23	03/01/84	70.36	839.54	04/10/84	72.35	837.55
12/03/83	67.53	842.37	01/11/84	68.67	841.23	03/01/84	70.30	839.60	04/10/84	72.36	837.54
12/03/83	67.59	842.31	01/11/84	68.70	841.20	03/02/84	70.40	839.50	04/11/84	72.36	837.54
12/04/83	67.54	842.36	01/12/84	68.74	841.16	03/02/84	70.36	839.54	04/11/84	72.34	837.56
12/04/83	67.60	842.30	01/12/84	68.70	841.20	03/03/84	70.40	839.50	04/12/84	72.34	837.56
12/05/83	67.65	842.25	01/13/84	68.87	841.03	03/03/84	70.42	839.48	04/12/84	72.29	837.61
12/05/83	67.60	842.30	01/13/84	68.74	841.16	03/04/84	70.41	839.49	04/13/84	72.32	837.58
12/06/83	67.65	842.25	01/14/84	68.87	841.03	03/04/84	70.43	839.47	04/13/84	72.44	837.46
12/06/83	67.64	842.26	01/14/84	68.90	841.00	03/05/84	70.51	839.39	04/14/84	72.56	837.34
12/07/83	67.64	842.26	01/15/84	68.78	841.12	03/05/84	70.44	839.46	04/14/84	72.45	837.45
12/07/83	67.67	842.23	01/15/84	68.89	841.01	03/06/84	70.52	839.38	04/15/84	72.61	837.29
12/08/83	67.72	842.18	01/16/84	68.77	841.13	03/06/84	70.55	839.35	04/15/84	72.56	837.34
12/08/83	67.67	842.23	01/16/84	68.88	841.02	03/07/84	70.54	839.36	04/16/84	72.62	837.28
12/09/83	67.76	842.14	01/17/84	68.89	841.01	03/07/84	70.63	839.27	04/16/84	72.65	837.25
12/09/83	67.72	842.18	01/17/84	68.96	840.94	03/08/84	70.71	839.19	04/17/84	72.68	837.22
12/10/83	67.75	842.15	01/18/84	68.93	840.97	03/08/84	70.63	839.27	04/17/84	72.64	837.26
12/10/83	67.77	842.13	01/18/84	68.96	840.94	03/09/84	70.71	839.19	04/18/84	72.73	837.17
12/11/83	67.77	842.13	01/19/84	68.94	840.96	03/09/84	70.74	839.16	04/18/84	72.68	837.22
12/11/83	67.75	842.15	01/19/84	69.05	840.85	03/10/84	70.66	839.24	04/19/84	72.78	837.12
12/12/83	67.79	842.11	01/20/84	69.02	840.88	03/10/84	70.79	839.11	04/19/84	72.73	837.17
12/12/83	67.78	842.12	01/20/84	69.06	840.84	03/11/84	70.80	839.10	04/20/84	72.88	837.02
12/13/83	67.74	842.16	01/21/84	69.03	840.87	03/11/84	70.83	839.07	04/20/84	72.78	837.12
12/13/83	67.78	842.12	01/21/84	69.00	840.90	03/12/84	70.82	839.08	04/21/84	72.92	836.98
12/14/83	67.74	842.16	01/22/84	69.05	840.85	03/12/84	70.84	839.06	04/21/84	72.88	837.02
12/14/83	67.74	842.16	01/22/84	69.03	840.87	03/13/84	70.83	839.07	04/22/84	72.92	836.98
12/15/83	67.92	841.98	01/23/84	69.04	840.86	03/13/84	70.91	838.99	04/22/84	72.91	836.99
12/15/83	67.81	842.09	01/23/84	69.06	840.84	03/14/84	70.84	839.06	04/23/84	72.91	836.99
12/15/83	67.74	842.16	01/24/84	69.11	840.79	03/14/84	70.91	838.99	04/23/84	72.90	837.00
12/16/83	67.81	842.09	01/24/84	69.02	840.88	03/15/84	70.92	838.98	04/24/84	72.95	836.95
12/16/83	67.88	842.02	01/25/84	69.13	840.77	03/15/84	71.11	838.79	04/24/84	72.90	837.00
12/17/83	67.88	842.02	01/25/84	69.11	840.79	03/16/84	71.11	838.79	04/25/84	72.95	836.95
12/17/83	67.93	841.97	01/26/84	69.28	840.62	03/16/84	71.14	838.76	04/25/84	73.03	836.87
12/18/83	67.96	841.94	01/26/84	69.13	840.77	03/17/84	71.14	838.76	04/26/84	73.03	836.87
12/18/83	67.94	841.96	01/27/84	69.15	840.75	03/17/84	71.17	838.73	04/26/84	72.97	836.93
12/19/83	67.96	841.94	01/27/84	69.28	840.62	03/18/84	71.18	838.72	04/27/84	72.98	836.92
12/19/83	67.99	841.91	01/28/84	69.25	840.65	03/18/84	71.21	838.69	04/27/84	72.91	836.99
12/20/83	68.00	841.90	01/28/84	69.14	840.76	03/19/84	71.21	838.69	04/28/84	73.16	836.74
12/20/83	67.98	841.92	01/29/84	69.37	840.53	03/19/84	71.20	838.70	04/28/84	72.95	836.95
12/21/83	67.94	841.96	01/29/84	69.24	840.66	03/20/84	71.25	838.65	04/29/84	73.21	836.69
12/21/83	67.99	841.91	01/30/84	69.39	840.51	03/20/84	71.20	838.70	04/29/84	73.17	836.73
12/22/83	67.93	841.97	01/30/84	69.35	840.55	03/21/84	71.25	838.65	04/30/84	73.19	836.71
12/22/83	67.94	841.96	01/31/84	69.38	840.52	03/21/84	71.32	838.58	04/30/84	73.25	836.65
12/23/83	68.00	841.90	01/31/84	69.35	840.55	03/22/84	71.41	838.49	05/01/84	73.29	836.61
12/23/83	67.94	841.96	02/01/84	69.38	840.52	03/22/84	71.32	838.58	05/01/84	73.25	836.65
12/24/83	68.00	841.90	02/01/84	69.40	840.50	03/23/84	71.41	838.49	05/02/84	73.30	836.60
12/24/83	68.11	841.79	02/02/84	69.42	840.48	03/23/84	71.43	838.47	05/02/84	73.29	836.61
12/25/83	68.05	841.85	02/02/84	69.38	840.52	03/24/84	71.43	838.47	05/03/84	73.32	836.58
12/25/83	68.12	841.78	02/03/84	69.41	840.49	03/24/84	71.48	838.42	05/03/84	73.30	836.60
12/26/83	68.05	841.85	02/03/84	69.44	840.46	03/25/84	71.48	838.42	05/04/84	73.36	836.54
12/26/83	67.98	841.92	02/04/84	69.46	840.44	03/25/84	71.54	838.36	05/04/84	73.32	836.58

138-049-22BBA2 **(Continued)** MP Elev (msl,ft)=909.9

West Fargo South Aquifer SI (ft.)=245-250

Date	Depth to Water (ft)	WL Elev (msl, ft)
05/05/84	73.43	836.47
05/05/84	73.36	836.54
05/06/84	73.46	836.44
05/06/84	73.43	836.47
05/07/84	73.58	836.32
05/07/84	73.47	836.43
05/08/84	73.70	836.20
05/08/84	73.58	836.32
05/09/84	73.87	836.03
05/09/84	73.66	836.24
05/10/84	73.65	836.25
05/10/84	73.71	836.19
05/11/84	73.76	836.14
05/11/84	73.69	836.21
05/12/84	73.80	836.10
05/12/84	73.76	836.14
05/13/84	73.77	836.13
05/13/84	73.88	836.02
05/14/84	73.88	836.02
05/14/84	73.94	835.96
05/15/84	73.96	835.94
05/15/84	73.93	835.97
05/16/84	73.95	835.95
05/16/84	73.95	835.95
05/16/84	73.91	835.99
05/17/84	73.90	836.00
05/17/84	73.97	835.93
05/18/84	73.90	836.00
05/18/84	73.95	835.95
05/19/84	74.00	835.90
05/19/84	73.95	835.95
05/20/84	73.98	835.92
05/20/84	74.00	835.90
05/21/84	73.98	835.92
05/21/84	74.03	835.87
05/22/84	74.03	835.87
05/22/84	74.17	835.73
05/23/84	74.17	835.73
05/23/84	74.20	835.70
05/24/84	74.24	835.66
05/24/84	74.15	835.75
05/25/84	74.34	835.56
05/25/84	74.24	835.66
05/26/84	74.35	835.55
05/26/84	74.47	835.43
05/27/84	74.47	835.43
05/27/84	74.55	835.35
05/28/84	74.65	835.25
05/28/84	74.55	835.35
05/29/84	74.65	835.25
05/29/84	74.70	835.20
05/30/84	74.66	835.24
05/30/84	74.71	835.19
05/31/84	74.63	835.27
05/31/84	74.65	835.25
06/01/84	74.65	835.25
06/01/84	74.78	835.12
06/02/84	74.78	835.12
06/02/84	74.88	835.02
06/03/84	75.02	834.88
06/03/84	74.88	835.02
06/04/84	74.90	835.00
06/04/84	74.98	834.92
06/05/84	74.90	835.00
06/05/84	75.03	834.87
06/06/84	75.02	834.88
06/06/84	74.97	834.93
06/07/84	74.97	834.93
06/07/84	75.07	834.83
06/08/84	74.90	835.00
06/08/84	75.05	834.85
06/09/84	75.05	834.85
06/09/84	75.13	834.77
06/10/84	75.25	834.65
06/10/84	75.13	834.77
06/11/84	75.26	834.64
06/11/84	75.28	834.62
06/12/84	75.25	834.65
06/12/84	75.31	834.59
06/13/84	75.32	834.58
06/13/84	75.41	834.49
06/14/84	75.41	834.49
06/14/84	75.45	834.45
06/15/84	75.44	834.46
06/15/84	75.44	834.46
06/16/84	75.44	834.46
06/16/84	75.44	834.46
06/17/84	75.44	834.46
06/17/84	75.45	834.45
06/18/84	75.52	834.38
06/18/84	75.45	834.45
06/19/84	75.54	834.36
06/19/84	75.52	834.38
06/20/84	75.56	834.34
06/20/84	75.54	834.36
06/21/84	75.66	834.24
06/21/84	75.57	834.33
06/21/84	75.56	834.34
06/22/84	75.57	834.33
06/22/84	75.57	834.33
06/23/84	75.57	834.33
06/23/84	75.62	834.28
06/24/84	75.62	834.28
06/24/84	75.62	834.28
06/25/84	75.62	834.28
06/25/84	75.63	834.27
06/26/84	75.62	834.28
06/26/84	75.65	834.25
06/27/84	75.65	834.25
06/27/84	75.69	834.21
06/28/84	75.69	834.21
06/28/84	75.75	834.15
06/29/84	75.82	834.08
06/29/84	75.76	834.14
06/30/84	75.83	834.07
06/30/84	75.82	834.08
07/01/84	75.85	834.05
07/01/84	75.83	834.07
07/02/84	75.86	834.04
07/02/84	75.84	834.06
07/03/84	75.94	833.96
07/03/84	75.86	834.04
07/04/84	75.94	833.96
07/04/84	75.98	833.92
07/05/84	75.98	833.92
07/05/84	76.04	833.86
07/06/84	76.11	833.79
07/06/84	76.05	833.85
07/07/84	76.11	833.79
07/07/84	76.14	833.76
07/08/84	76.14	833.76
07/08/84	76.15	833.75
07/09/84	76.15	833.75
07/09/84	76.24	833.66
07/10/84	76.33	833.57
07/10/84	76.25	833.65
07/11/84	76.45	833.45
07/11/84	76.33	833.57
07/12/84	76.45	833.45
07/12/84	76.45	833.45
07/13/84	76.45	833.45
07/13/84	76.47	833.43
07/14/84	76.59	833.31
07/14/84	76.48	833.42
07/15/84	76.60	833.30
07/15/84	76.70	833.20
07/16/84	76.72	833.18
07/16/84	76.70	833.20
07/17/84	76.73	833.17
07/17/84	76.84	833.06
07/18/84	76.85	833.05
07/18/84	76.91	832.99
07/19/84	77.04	832.86
07/19/84	76.91	832.99
07/20/84	77.11	832.79
07/20/84	77.05	832.85
07/21/84	77.15	832.75
07/21/84	77.11	832.79
07/22/84	77.15	832.75
07/22/84	77.23	832.67
07/23/84	77.24	832.66
07/23/84	77.33	832.57
07/24/84	77.41	832.49
07/24/84	77.34	832.56
07/25/84	77.44	832.46
07/25/84	77.41	832.49
07/26/84	77.51	832.39
07/26/84	77.44	832.46
07/27/84	77.51	832.39
07/27/84	77.63	832.27
07/28/84	77.63	832.27
07/28/84	77.74	832.16
07/29/84	77.77	832.13
07/29/84	77.74	832.16
07/30/84	77.78	832.12
07/30/84	77.76	832.14
07/31/84	77.79	832.11
07/31/84	77.90	832.00
08/01/84	78.02	831.88
08/01/84	77.90	832.00
08/02/84	78.08	831.82
08/02/84	78.02	831.88
08/03/84	78.15	831.75
08/03/84	78.09	831.81
08/04/84	78.21	831.69
08/04/84	78.15	831.75
08/05/84	78.29	831.61
08/05/84	78.21	831.69
08/06/84	78.40	831.50
08/06/84	78.29	831.61
08/07/84	78.46	831.44
08/07/84	78.40	831.50
08/08/84	78.57	831.33
08/08/84	78.46	831.44
08/09/84	78.66	831.24
08/09/84	78.57	831.33
08/09/84	78.72	831.18
08/10/84	78.78	831.12
08/10/84	78.72	831.18
08/11/84	78.82	831.08
08/11/84	78.78	831.12
08/12/84	78.83	831.07
08/12/84	78.89	831.01
08/13/84	78.97	830.93
08/13/84	78.89	831.01
08/14/84	79.07	830.83
08/14/84	78.98	830.92
08/15/84	79.08	830.82
08/15/84	79.23	830.67
08/16/84	79.23	830.67
08/16/84	79.26	830.64
08/17/84	79.26	830.64
08/17/84	79.37	830.53
08/18/84	79.38	830.52
08/18/84	79.58	830.32
08/19/84	79.59	830.31
08/19/84	79.58	830.32
08/20/84	79.59	830.31
08/20/84	79.61	830.29
08/21/84	79.77	830.13
08/21/84	79.61	830.29
08/22/84	79.91	829.99
08/22/84	79.77	830.13
08/23/84	79.95	829.95
08/23/84	79.91	829.99
08/24/84	79.95	829.95
08/24/84	79.98	829.92
08/25/84	80.04	829.86
08/25/84	79.98	829.92
08/26/84	80.07	829.83
08/26/84	80.04	829.86
08/27/84	80.07	829.83
08/27/84	80.17	829.73
08/28/84	80.24	829.66
08/28/84	80.17	829.73
08/29/84	80.33	829.57
08/29/84	80.24	829.66
08/30/84	80.42	829.48
08/30/84	80.34	829.56
08/31/84	80.48	829.42
08/31/84	80.42	829.48
09/01/84	80.55	829.35
09/01/84	80.49	829.41
09/02/84	80.69	829.21
09/02/84	80.55	829.35
09/03/84	80.74	829.16
09/03/84	80.69	829.21
09/04/84	80.81	829.09
09/04/84	80.74	829.16
09/05/84	80.84	829.06
09/05/84	80.81	829.09
09/06/84	80.82	829.08
09/06/84	80.74	829.16
09/07/84	80.72	829.18
09/07/84	80.78	829.12
09/08/84	80.82	829.08
09/08/84	80.78	829.12
09/09/84	80.84	829.06
09/09/84	80.82	829.08
09/10/84	80.86	829.04
09/10/84	80.84	829.06
09/11/84	80.88	829.02
09/11/84	80.86	829.04
09/12/84	80.86	829.04
09/12/84	80.86	829.04
09/12/84	80.78	829.12
09/13/84	80.81	829.09
09/13/84	80.86	829.04
09/14/84	80.86	829.04
09/14/84	80.87	829.03
09/15/84	80.88	829.02
09/15/84	80.85	829.05
09/16/84	80.79	829.11
09/16/84	80.85	829.05
09/17/84	80.75	829.15
09/17/84	80.79	829.11
09/18/84	80.75	829.15
09/18/84	80.75	829.15
09/19/84	80.69	829.21
09/19/84	80.74	829.16
09/20/84	80.68	829.22
09/20/84	80.74	829.16
09/21/84	80.68	829.22
09/21/84	80.56	829.34
09/22/84	80.57	829.33
09/22/84	80.67	829.23
09/23/84	80.67	829.23
09/23/84	80.71	829.19
09/24/84	80.67	829.23
09/24/84	80.62	829.28
09/25/84	80.63	829.27
09/25/84	80.66	829.24
09/26/84	80.65	829.25
09/26/84	80.67	829.23
09/27/84	80.65	829.25
09/27/84	80.64	829.26
09/28/84	80.61	829.29
09/28/84	80.64	829.26
09/29/84	80.54	829.36
09/29/84	80.61	829.29
09/30/84	80.54	829.36
09/30/84	80.53	829.37
10/01/84	80.45	829.45
10/01/84	80.54	829.36
10/02/84	80.42	829.48
10/02/84	80.45	829.45
10/03/84	80.47	829.43
10/03/84	80.44	829.46
10/04/84	80.41	829.49
10/04/84	80.45	829.45
10/05/84	80.41	829.49
10/05/84	80.42	829.48
10/06/84	80.42	829.48
10/06/84	80.38	829.52
10/07/84	80.36	829.54
10/07/84	80.38	829.52
10/08/84	80.36	829.54
10/08/84	80.37	829.53
10/09/84	80.37	829.53
10/09/84	80.35	829.55

138-049-22BBA2 **(Continued)** MP Elev (msl,ft)=909.9

West Fargo South Aquifer SI (ft.)=245-250

Date	Depth to Water (ft)	WL Elev (msl. ft)	Date	Depth to Water (ft)	WL Elev (msl. ft)	Date	Depth to Water (ft)	WL Elev (msl. ft)	Date	Depth to Water (ft)	WL Elev (msl. ft)
10/10/84	81.25	828.65	11/18/84	79.65	830.25	12/30/84	79.49	830.41	02/07/85	79.21	830.69
10/10/84	80.31	829.59	11/19/84	79.57	830.33	12/30/84	79.46	830.44	02/08/85	79.21	830.69
10/10/84	80.35	829.55	11/19/84	79.58	830.32	12/31/84	79.47	830.43	02/08/85	79.10	830.80
10/11/84	80.26	829.64	11/20/84	79.59	830.31	12/31/84	79.49	830.41	02/09/85	79.08	830.82
10/11/84	80.31	829.59	11/20/84	79.52	830.38				02/09/85	79.11	830.79
10/12/84	80.26	829.64	11/21/84	79.45	830.45	01/01/85	79.45	830.45	02/10/85	79.11	830.79
10/12/84	80.21	829.69	11/21/84	79.52	830.38	01/01/85	79.46	830.44	02/10/85	79.14	830.76
10/13/84	80.07	829.83	11/22/84	79.41	830.49	01/02/85	79.44	830.46	02/11/85	79.13	830.77
10/13/84	80.21	829.69	11/22/84	79.45	830.45	01/02/85	79.45	830.45	02/11/85	79.11	830.79
10/14/84	79.96	829.94	11/23/84	79.41	830.49	01/03/85	79.44	830.46	02/12/85	79.05	830.85
10/14/84	80.07	829.83	11/23/84	79.39	830.51	01/03/85	79.41	830.49	02/12/85	79.11	830.79
10/15/84	79.96	829.94	11/24/84	79.41	830.49	01/04/85	79.41	830.49	02/13/85	79.05	830.85
10/15/84	79.77	830.13	11/24/84	79.46	830.44	01/04/85	79.43	830.47	02/13/85	79.06	830.84
10/16/84	79.82	830.08	11/27/84	79.49	830.41	01/05/85	79.34	830.56	02/14/85	79.06	830.84
10/16/84	79.87	830.03	11/27/84	79.49	830.41	01/05/85	79.43	830.47	02/14/85	79.03	830.87
10/17/84	79.84	830.06	11/28/84	79.49	830.41	01/06/85	79.37	830.53	02/15/85	79.03	830.87
10/17/84	79.86	830.04	11/28/84	79.49	830.41	01/06/85	79.31	830.59	02/15/85	78.86	831.04
10/18/84	79.86	830.04	11/29/84	79.49	830.41	01/07/85	79.47	830.43	02/16/85	78.87	831.03
10/18/84	79.68	830.22	11/29/84	79.53	830.37	01/07/85	79.37	830.53	02/16/85	78.92	830.98
10/19/84	79.60	830.30	11/30/84	79.53	830.37	01/08/85	79.46	830.44	02/17/85	78.92	830.98
10/19/84	79.66	830.24	11/30/84	79.54	830.36	01/08/85	79.48	830.42	02/17/85	78.94	830.96
10/20/84	79.60	830.30	12/01/84	79.59	830.31	01/09/85	79.44	830.46	02/18/85	78.93	830.97
10/20/84	79.65	830.25	12/01/84	79.54	830.36	01/09/85	79.46	830.44	02/18/85	78.96	830.94
10/21/84	79.66	830.24	12/02/84	79.59	830.31	01/10/85	79.51	830.39	02/19/85	78.94	830.96
10/21/84	79.65	830.25	12/02/84	79.59	830.31	01/10/85	79.45	830.45	02/19/85	78.86	831.04
10/22/84	79.66	830.24	12/03/84	79.59	830.31	01/11/85	79.54	830.36	02/20/85	78.81	831.09
10/22/84	79.69	830.21	12/03/84	79.61	830.29	01/11/85	79.48	830.42	02/20/85	78.86	831.04
10/23/84	79.66	830.24	12/04/84	79.61	830.29	01/12/85	79.33	830.57	02/21/85	78.84	831.06
10/23/84	79.69	830.21	12/04/84	79.56	830.34	01/12/85	79.48	830.42	02/21/85	78.86	831.04
10/24/84	79.65	830.25	12/05/84	79.51	830.39	01/13/85	79.30	830.60	02/22/85	78.83	831.07
10/25/84	79.52	830.38	12/05/84	79.69	830.21	01/13/85	79.37	830.53	02/22/85	78.84	831.06
10/25/84	79.59	830.31	12/05/84	79.64	830.26	01/14/85	79.38	830.52	02/23/85	78.88	831.02
10/26/84	79.55	830.35	12/06/84	79.64	830.26	01/14/85	79.45	830.45	02/23/85	78.84	831.06
10/26/84	79.59	830.31	12/06/84	79.50	830.40	01/15/85	79.42	830.48	02/24/85	78.78	831.12
10/27/84	79.63	830.27	12/07/84	79.49	830.41	01/15/85	79.39	830.51	02/24/85	78.87	831.03
10/27/84	79.56	830.34	12/07/84	79.43	830.47	01/16/85	79.38	830.52	02/25/85	78.76	831.14
10/28/84	79.53	830.37	12/08/84	79.47	830.43	01/16/85	79.40	830.50	02/25/85	78.83	831.07
10/28/84	79.63	830.27	12/08/84	79.47	830.43	01/17/85	79.28	830.62	02/26/85	78.83	831.07
10/29/84	79.53	830.37	12/09/84	79.51	830.39	01/17/85	79.38	830.52	02/26/85	78.86	831.04
10/29/84	79.63	830.27	12/09/84	79.46	830.44	01/18/85	79.40	830.50	02/27/85	78.86	831.04
10/30/84	79.65	830.25	12/10/84	79.52	830.38	01/18/85	79.34	830.56	02/27/85	78.76	831.14
10/30/84	79.54	830.36	12/10/84	79.42	830.48	01/19/85	79.47	830.43	02/28/85	78.69	831.21
10/31/84	79.60	830.30	12/11/84	79.39	830.51	01/19/85	79.41	830.49	02/28/85	78.76	831.14
10/31/84	79.41	830.49	12/11/84	79.45	830.45	01/20/85	79.44	830.46	03/01/85	78.70	831.20
10/31/84	79.54	830.36	12/12/84	79.46	830.44	01/20/85	79.46	830.44	03/01/85	78.80	831.10
11/01/84	79.41	830.49	12/12/84	79.49	830.41	01/21/85	79.44	830.46	03/02/85	78.80	831.10
11/01/84	79.52	830.38	12/13/84	79.50	830.40	01/21/85	79.46	830.44	03/02/85	78.83	831.07
11/02/84	79.58	830.32	12/13/84	79.57	830.33	01/22/85	79.45	830.45	03/03/85	78.82	831.08
11/02/84	79.53	830.37	12/14/84	79.57	830.33	01/22/85	79.36	830.54	03/03/85	78.64	831.26
11/03/84	79.55	830.35	12/14/84	79.50	830.40	01/23/85	79.36	830.54	03/04/85	78.54	831.36
11/03/84	79.58	830.32	12/15/84	79.40	830.50	01/23/85	79.28	830.62	03/04/85	78.64	831.26
11/04/84	79.48	830.42	12/15/84	79.49	830.41	01/24/85	79.28	830.62	03/05/85	78.64	831.26
11/04/84	79.55	830.35	12/16/84	79.33	830.57	01/24/85	79.37	830.53	03/05/85	78.71	831.19
11/05/84	79.54	830.36	12/16/84	79.45	830.45	01/25/85	79.37	830.53	03/06/85	78.71	831.19
11/05/84	79.48	830.42	12/17/84	79.49	830.41	01/25/85	79.41	830.49	03/06/85	78.56	831.34
11/06/84	79.54	830.36	12/17/84	79.46	830.44	01/26/85	79.29	830.61	03/07/85	78.59	831.31
11/06/84	79.57	830.33	12/18/84	79.49	830.41	01/26/85	79.36	830.54	03/07/85	78.57	831.33
11/07/84	79.57	830.33	12/18/84	79.44	830.46	01/27/85	79.33	830.57	03/08/85	78.58	831.32
11/07/84	79.62	830.28	12/19/84	79.36	830.54	01/27/85	79.30	830.60	03/08/85	78.63	831.27
11/08/84	79.62	830.28	12/19/84	79.43	830.47	01/28/85	79.29	830.61	03/09/85	78.58	831.32
11/08/84	79.61	830.29	12/20/84	79.34	830.56	01/28/85	79.33	830.57	03/09/85	78.62	831.28
11/09/84	79.60	830.30	12/20/84	79.40	830.50	01/29/85	79.27	830.63	03/10/85	78.53	831.37
11/09/84	79.61	830.29	12/21/84	79.30	830.60	01/29/85	79.32	830.58	03/10/85	78.57	831.33
11/10/84	79.55	830.35	12/21/84	79.41	830.49	01/30/85	79.32	830.58	03/11/85	78.56	831.34
11/10/84	79.60	830.30	12/22/84	79.41	830.49	01/30/85	79.31	830.59	03/11/85	78.52	831.38
11/11/84	79.55	830.35	12/22/84	79.41	830.49	01/31/85	79.30	830.60	03/12/85	78.50	831.40
11/11/84	79.46	830.44	12/23/84	79.44	830.46	01/31/85	79.27	830.63	03/12/85	78.56	831.34
11/12/84	79.49	830.41	12/23/84	79.41	830.49	02/01/85	79.27	830.63	03/13/85	78.49	831.41
11/12/84	79.59	830.31	12/24/84	79.41	830.49	02/01/85	79.28	830.62	03/13/85	78.50	831.40
11/13/84	79.59	830.31	12/24/84	79.44	830.46	02/02/85	79.25	830.65	03/14/85	78.50	831.40
11/13/84	79.62	830.28	12/25/84	79.41	830.49	02/02/85	79.27	830.63	03/14/85	78.54	831.36
11/14/84	79.62	830.28	12/25/84	79.48	830.42	02/03/85	79.29	830.61	03/15/85	78.54	831.36
11/14/84	79.58	830.32	12/26/84	79.48	830.42	02/03/85	79.27	830.63	03/15/85	78.48	831.42
11/15/84	79.62	830.28	12/26/84	79.41	830.49	02/04/85	79.29	830.61	03/16/85	78.50	831.40
11/15/84	79.63	830.27	12/27/84	79.34	830.56	02/04/85	79.23	830.67	03/16/85	78.51	831.39
11/16/84	79.62	830.28	12/27/84	79.41	830.49	02/05/85	79.11	830.79	03/17/85	78.50	831.40
11/16/84	79.65	830.25	12/28/84	79.33	830.57	02/05/85	79.23	830.67	03/17/85	78.51	831.39
11/17/84	79.66	830.24	12/28/84	79.38	830.52	02/06/85	79.13	830.77	03/18/85	78.49	831.41
11/17/84	79.65	830.25	12/29/84	79.46	830.44	02/06/85	79.20	830.70	03/18/85	78.45	831.45
11/18/84	79.58	830.32	12/29/84	79.38	830.52	02/07/85	79.22	830.68	03/19/85	78.50	831.40

138-049-22BBA2 **(Continued)** MP Elev (msl,ft)=909.9

West Fargo South Aquifer Sl (ft.)=245-250

Date	Depth to Water (ft)	WL Elev (msl, ft)
03/19/85	78.47	831.43
03/20/85	78.48	831.42
03/20/85	78.50	831.40
03/21/85	78.45	831.45
03/21/85	78.48	831.42
03/22/85	78.44	831.46
03/22/85	78.45	831.45
03/23/85	78.44	831.46
03/23/85	78.42	831.48
03/24/85	78.42	831.48
03/24/85	78.44	831.46
03/25/85	78.40	831.50
03/25/85	78.44	831.46
03/26/85	78.32	831.58
03/26/85	78.40	831.50
03/27/85	78.35	831.55
03/27/85	78.32	831.58
03/28/85	78.30	831.60
03/28/85	78.34	831.56
03/29/85	78.31	831.59
03/29/85	78.45	831.45
03/30/85	78.44	831.46
03/30/85	78.45	831.45
03/31/85	78.44	831.46
03/31/85	78.39	831.51
04/01/85	78.42	831.48
04/01/85	78.44	831.46
04/02/85	78.40	831.50
04/02/85	78.43	831.47
04/03/85	78.45	831.45
04/03/85	78.42	831.48
04/04/85	78.47	831.43
04/04/85	78.45	831.45
04/05/85	78.48	831.42
04/05/85	78.50	831.40
04/06/85	78.50	831.40
04/06/85	78.60	831.30
04/07/85	78.61	831.29
04/07/85	78.70	831.20
04/08/85	78.74	831.16
04/08/85	78.70	831.20
04/09/85	78.66	831.24
04/09/85	78.72	831.18
04/10/85	78.66	831.24
04/10/85	78.73	831.17
04/11/85	78.76	831.14
04/11/85	78.73	831.17
04/12/85	78.78	831.12
04/12/85	78.75	831.15
04/13/85	78.78	831.12
04/13/85	78.80	831.10
04/14/85	78.74	831.16
04/14/85	78.80	831.10
04/15/85	78.84	831.06
04/15/85	78.74	831.16
04/16/85	78.87	831.03
04/16/85	78.83	831.07
04/17/85	78.74	831.16
04/17/85	78.82	831.08
04/18/85	78.76	831.14
04/18/85	78.74	831.16
04/19/85	78.71	831.19
04/19/85	78.75	831.15
04/20/85	78.69	831.21
04/20/85	78.77	831.13
04/21/85	78.77	831.13
04/21/85	78.74	831.16
04/22/85	78.82	831.08
04/22/85	78.76	831.14
04/23/85	78.80	831.10
04/23/85	78.83	831.07
04/24/85	78.83	831.07
04/24/85	78.84	831.06
04/25/85	78.87	831.03
04/25/85	78.83	831.07
04/26/85	78.87	831.03
04/26/85	78.91	830.99
04/27/85	78.88	831.02
04/27/85	78.91	830.99
04/28/85	78.88	831.02
04/28/85	78.88	831.02
04/29/85	78.88	831.02
04/29/85	78.82	831.08
04/30/85	78.84	831.06
04/30/85	78.85	831.05
05/01/85	78.78	831.12
05/01/85	78.84	831.06
05/02/85	78.72	831.18
05/02/85	78.78	831.12
05/03/85	78.72	831.18
05/03/85	78.57	831.33
05/04/85	78.56	831.34
05/04/85	78.49	831.41
05/05/85	78.50	831.40
05/05/85	78.50	831.40
05/05/85	78.53	831.37
05/06/85	78.47	831.43
05/06/85	78.50	831.40
05/07/85	78.47	831.43
05/07/85	78.56	831.34
05/08/85	78.44	831.46
05/08/85	78.52	831.38
05/09/85	78.48	831.42
05/09/85	78.44	831.46
05/10/85	78.46	831.44
05/10/85	78.37	831.53
05/11/85	78.35	831.55
05/11/85	78.34	831.56
05/12/85	78.38	831.52
05/12/85	78.31	831.59
05/13/85	78.39	831.51
05/13/85	78.45	831.45
05/14/85	78.45	831.45
05/14/85	78.46	831.44
05/15/85	78.46	831.44
05/15/85	78.41	831.49
05/16/85	78.44	831.46
05/16/85	78.50	831.40
05/17/85	78.50	831.40
05/17/85	78.52	831.38
05/18/85	78.52	831.38
05/18/85	78.52	831.38
05/19/85	78.64	831.26
05/19/85	78.52	831.38
05/20/85	78.64	831.26
05/20/85	78.73	831.17
05/21/85	78.73	831.17
05/21/85	78.77	831.13
05/22/85	78.77	831.13
05/22/85	78.71	831.19
05/23/85	78.75	831.15
05/23/85	78.72	831.18
05/24/85	78.70	831.20
05/24/85	78.73	831.17
05/25/85	78.70	831.20
05/25/85	78.67	831.23
05/26/85	78.67	831.23
05/26/85	78.73	831.17
05/27/85	78.86	831.04
05/27/85	78.73	831.17
05/28/85	78.85	831.05
05/28/85	78.81	831.09
05/29/85	78.81	831.09
05/29/85	78.77	831.13
05/30/85	78.70	831.20
05/30/85	78.80	831.10
05/31/85	78.79	831.11
05/31/85	78.69	831.21
06/01/85	78.79	831.11
06/01/85	78.92	830.98
06/02/85	79.01	830.89
06/02/85	78.92	830.98
06/03/85	79.07	830.83
06/03/85	79.01	830.89
06/04/85	79.07	830.83
06/04/85	79.14	830.76
06/05/85	79.14	830.76
06/05/85	79.20	830.70
06/06/85	79.23	830.67
06/06/85	79.20	830.70
06/07/85	79.23	830.67
06/07/85	79.31	830.59
06/08/85	79.36	830.54
06/08/85	79.31	830.59
06/08/85	79.40	830.50
06/09/85	79.51	830.39
06/09/85	79.40	830.50
06/10/85	79.51	830.39
06/10/85	79.63	830.27
06/11/85	79.63	830.27
06/11/85	79.63	830.27
06/12/85	79.63	830.27
06/12/85	79.68	830.22
06/13/85	79.71	830.19
06/13/85	79.68	830.22
06/14/85	79.78	830.12
06/14/85	79.71	830.19
06/15/85	79.84	830.06
06/15/85	79.78	830.12
06/16/85	79.84	830.06
06/16/85	79.94	829.96
06/17/85	79.99	829.91
06/17/85	79.94	829.96
06/18/85	80.12	829.78
06/18/85	79.99	829.91
06/19/85	80.20	829.70
06/19/85	80.12	829.78
06/20/85	80.17	829.73
06/20/85	80.19	829.71
06/21/85	80.15	829.75
06/21/85	80.16	829.74
06/22/85	80.16	829.74
06/22/85	80.23	829.67
06/23/85	80.24	829.66
06/23/85	80.30	829.60
06/24/85	80.31	829.59
06/24/85	80.30	829.60
06/25/85	80.30	829.60
06/25/85	80.31	829.59
06/26/85	80.30	829.60
06/26/85	80.36	829.54
06/27/85	80.36	829.54
06/27/85	80.37	829.53
06/28/85	80.37	829.53
06/28/85	80.39	829.51
06/29/85	80.39	829.51
06/29/85	80.42	829.48
06/30/85	80.42	829.48
06/30/85	80.43	829.47
07/01/85	80.43	829.47
07/01/85	80.43	829.47
07/02/85	80.42	829.48
07/02/85	80.43	829.47
07/03/85	80.42	829.48
07/03/85	80.38	829.52
07/04/85	80.43	829.47
07/04/85	80.40	829.50
07/05/85	80.55	829.35
07/05/85	80.43	829.47
07/06/85	80.55	829.35
07/06/85	80.53	829.37
07/07/85	80.57	829.33
07/07/85	80.53	829.37
07/08/85	80.69	829.21
07/08/85	80.57	829.33
07/08/85	80.74	829.16
07/09/85	80.79	829.11
07/09/85	80.70	829.20
07/10/85	80.88	829.02
07/10/85	80.78	829.12
07/11/85	80.88	829.02
07/11/85	80.93	828.97
07/12/85	80.93	828.97
07/12/85	81.04	828.86
07/13/85	81.17	828.73
07/13/85	81.04	828.86
07/14/85	81.27	828.63
07/14/85	81.17	828.73
07/15/85	81.27	828.63
07/15/85	81.40	828.50
07/16/85	81.40	828.50
07/16/85	81.46	828.44
07/17/85	81.46	828.44
07/17/85	81.53	828.37
07/18/85	81.54	828.36
07/18/85	81.68	828.22
07/19/85	81.68	828.22
07/19/85	81.81	828.09
07/20/85	81.81	828.09
07/20/85	81.89	828.01
07/21/85	81.88	828.02
07/21/85	81.96	827.94
07/22/85	81.98	827.92
07/22/85	81.96	827.94
07/23/85	81.98	827.92
07/23/85	81.98	827.92
07/24/85	82.03	827.87
07/24/85	81.98	827.92
07/25/85	82.18	827.72
07/25/85	82.03	827.87
07/26/85	82.20	827.70
07/26/85	82.18	827.72
07/27/85	82.20	827.70
07/27/85	82.18	827.72
07/28/85	82.26	827.64
07/28/85	82.18	827.72
07/29/85	82.26	827.64
07/29/85	82.30	827.60
07/30/85	82.30	827.60
07/30/85	82.33	827.57
07/31/85	82.37	827.53
07/31/85	82.33	827.57
08/01/85	82.37	827.53
08/01/85	82.39	827.51
08/02/85	82.39	827.51
08/02/85	82.39	827.51
08/03/85	82.39	827.51
08/03/85	82.39	827.51
08/04/85	82.39	827.51
08/04/85	82.39	827.51
08/05/85	82.45	827.45
08/05/85	82.39	827.51
08/06/85	82.46	827.44
08/06/85	82.45	827.45
08/07/85	82.46	827.44
08/07/85	82.48	827.42
08/08/85	82.48	827.42
08/08/85	82.48	827.42
08/09/85	82.48	827.42
08/09/85	82.52	827.38
08/10/85	82.67	827.23
08/10/85	82.52	827.38
08/11/85	82.67	827.23
08/11/85	82.67	827.23
08/12/85	82.50	827.40
08/12/85	82.67	827.23
08/13/85	82.53	827.37
08/13/85	82.50	827.40
08/14/85	82.54	827.36
08/14/85	82.52	827.38
08/15/85	82.54	827.36
08/15/85	82.54	827.36
08/16/85	82.54	827.36
08/16/85	82.54	827.36
08/17/85	82.51	827.39
08/17/85	82.62	827.28
08/17/85	82.54	827.36
08/18/85	82.52	827.38
08/18/85	82.53	827.37
08/19/85	82.61	827.29
08/19/85	82.53	827.37
08/20/85	82.61	827.29
08/20/85	82.59	827.31
08/21/85	82.59	827.31
08/21/85	82.59	827.31
08/22/85	82.58	827.32
08/22/85	82.57	827.33
08/23/85	82.57	827.33
08/23/85	82.53	827.37
09/06/85	81.93	827.97

138-049-22BBA2 **(Continued)** MP Elev (msl,ft)=909.9

West Fargo South Aquifer SI (ft.)=245-250

Date	Depth to Water (ft)	WL Elev (msl. ft)
09/06/85	81.93	827.97
09/07/85	81.93	827.97
09/07/85	81.93	827.97
09/08/85	81.96	827.94
09/08/85	81.93	827.97
09/09/85	81.96	827.94
09/09/85	81.96	827.94
09/10/85	81.96	827.94
09/10/85	81.95	827.95
09/11/85	81.95	827.95
09/11/85	81.95	827.95
09/12/85	81.95	827.95
09/12/85	81.95	827.95
09/13/85	81.95	827.95
09/13/85	81.92	827.98
09/14/85	81.92	827.98
09/14/85	81.92	827.98
09/15/85	81.92	827.98
09/15/85	81.92	827.98
09/16/85	81.85	828.05
09/16/85	81.92	827.98
09/17/85	81.57	828.33
09/17/85	81.85	828.05
09/18/85	81.58	828.32
09/18/85	81.59	828.31
09/19/85	81.56	828.34
09/19/85	81.58	828.32
09/20/85	81.61	828.29
09/20/85	81.57	828.33
09/21/85	81.51	828.39
09/21/85	81.61	828.29
09/22/85	81.53	828.37
09/22/85	81.50	828.40
09/22/85	81.48	828.42
09/23/85	81.47	828.43
09/23/85	81.48	828.42
09/24/85	81.47	828.43
09/24/85	81.45	828.45
09/25/85	81.45	828.45
09/25/85	81.45	828.45
09/26/85	81.38	828.52
09/26/85	81.45	828.45
09/27/85	81.39	828.51
09/27/85	81.36	828.54
09/28/85	81.41	828.49
09/28/85	81.40	828.50
09/29/85	81.41	828.49
09/29/85	81.41	828.49
09/30/85	81.37	828.53
09/30/85	81.41	828.49
10/01/85	81.31	828.59
10/01/85	81.38	828.52
10/02/85	81.25	828.65
10/02/85	81.31	828.59
10/03/85	81.20	828.70
10/03/85	81.25	828.65
10/04/85	81.21	828.69
10/04/85	81.20	828.70
10/05/85	81.20	828.70
10/05/85	81.21	828.69
10/06/85	81.19	828.71
10/06/85	81.15	828.75
10/07/85	81.15	828.75
10/07/85	80.99	828.91
10/08/85	80.99	828.91
10/08/85	81.11	828.79
10/09/85	81.12	828.78
10/09/85	81.11	828.79
10/10/85	81.07	828.83
10/10/85	81.12	828.78
10/11/85	81.00	828.90
10/11/85	81.07	828.83
10/12/85	80.93	828.97
10/12/85	80.98	828.92
10/13/85	80.93	828.97
10/13/85	80.94	828.96
10/14/85	80.91	828.99
10/14/85	80.94	828.96
10/15/85	80.93	828.97
10/15/85	80.91	828.99
10/16/85	80.91	828.99
10/16/85	80.94	828.96
10/17/85	80.86	829.04
10/17/85	80.90	829.00
10/18/85	80.92	828.98
10/18/85	80.89	829.01
10/19/85	80.93	828.97
10/19/85	80.92	828.98
10/20/85	80.91	828.99
10/20/85	80.93	828.97
10/21/85	80.85	829.05
10/21/85	80.91	828.99
10/22/85	80.85	829.05
10/22/85	80.71	829.19
10/23/85	80.75	829.15
10/23/85	80.71	829.19
10/24/85	80.75	829.15
10/24/85	80.81	829.09
10/25/85	80.76	829.14
10/25/85	80.82	829.08
10/26/85	80.76	829.14
10/26/85	80.82	829.08
10/27/85	80.84	829.06
10/27/85	80.82	829.08
10/28/85	80 75	829.15
10/28/85	80 84	829.06
10/29/85	80 76	829.14
10/29/85	80 83	829.07
10/30/85	80 76	829.14
10/30/85	80 83	829.07
10/31/85	80 68	829.22
10/31/85	80 76	829.14
11/01/85	80 68	829.22
11/01/85	80 69	829.21
11/02/85	80 69	829.21
11/02/85	80 69	829.21
11/03/85	80 70	829.20
11/03/85	80 71	829.19
11/04/85	80 72	829.18
11/04/85	80 68	829.22
11/05/85	80 56	829.34
11/05/85	80 67	829.23
11/06/85	80 59	829.31
11/06/85	80 61	829.29
11/07/85	80 60	829.30
11/07/85	80 62	829.28
11/08/85	80 65	829.25
11/08/85	80 62	829.28
11/09/85	80.69	829.21
11/09/85	80.65	829.25
11/10/85	80.70	829.20
11/10/85	80.69	829.21
11/11/85	80.63	829.27
11/11/85	80.70	829.20
11/12/85	80.63	829.27
11/12/85	80.60	829.30
11/13/85	80.59	829.31
11/13/85	80.60	829.30
11/14/85	80.59	829.31
11/14/85	80.60	829.30
11/15/85	80.57	829.33
11/15/85	80.61	829.29
11/16/85	80.57	829.33
11/16/85	80.48	829.42
11/17/85	80.51	829.39
11/17/85	80.48	829.42
11/18/85	80.51	829.39
11/18/85	80.39	829.51
11/19/85	80.39	829.51
11/19/85	80.42	829.48
11/20/85	80.42	829.48
11/20/85	80.50	829.40
11/21/85	80.50	829.40
11/21/85	80.48	829.42
11/22/85	80.47	829.43
11/22/85	80.39	829.51
11/23/85	80.39	829.51
11/23/85	80.42	829.48
11/24/85	80.43	829.47
11/24/85	80.42	829.48
11/25/85	80.43	829.47
11/25/85	80.33	829.57
11/26/85	80.35	829.55
11/26/85	80.31	829.59
11/27/85	80.36	829.54
11/27/85	80.35	829.55
11/28/85	80.36	829.54
11/28/85	80.34	829.56
11/29/85	80.35	829.55
11/29/85	80.34	829.56
11/30/85	80.35	829.55
11/30/85	80.36	829.54
12/01/85	80.35	829.55
12/01/85	80.29	829.61
12/02/85	80.33	829.57
12/02/85	80.33	829.57
12/03/85	80.24	829.66
12/03/85	80.33	829.57
12/04/85	80.25	829.65
12/04/85	80.24	829.66
12/05/85	80.27	829.63
12/05/85	80.25	829.65
12/06/85	80.26	829.64
12/06/85	80.27	829.63
12/07/85	80.21	829.69
04/13/86	79.85	830.05
04/14/86	79.62	830.28
04/14/86	79.82	830.08
04/15/86	79.65	830.25
04/15/86	79.73	830.17
04/16/86	79.73	830.17
04/16/86	79.73	830.17
04/17/86	79.73	830.17
04/17/86	79.73	830.17
04/18/86	79.59	830.31
04/18/86	79.73	830.17
04/19/86	79.61	830.29
04/19/86	79.58	830.32
04/20/86	79.68	830.22
04/20/86	79.61	830.29
04/21/86	79.70	830.20
04/21/86	79.68	830.22
04/22/86	79.70	830.20
04/22/86	79.66	830.24
04/23/86	79.62	830.28
04/23/86	79.65	830.25
04/24/86	79.65	830.25
04/24/86	79.73	830.17
04/25/86	79.74	830.16
04/25/86	79.64	830.26
04/26/86	79.65	830.25
04/26/86	79.64	830.26
04/27/86	79.65	830.25
04/27/86	79.60	830.30
04/28/86	79.59	830.31
04/28/86	79.60	830.30
04/29/86	79.59	830.31
04/29/86	79.61	830.29
04/30/86	79.61	830.29
04/30/86	79.65	830.25
05/01/86	79.65	830.25
05/01/86	79.76	830.14
05/02/86	79.79	830.11
05/02/86	79.76	830.14
05/03/86	79.71	830.19
05/03/86	79.79	830.11
05/04/86	79.62	830.28
05/04/86	79.70	830.20
05/05/86	79.63	830.27
05/05/86	79.59	830.31
05/06/86	79.78	830.12
05/06/86	79.62	830.28
05/07/86	79.79	830.11
05/07/86	79.84	830.06
05/08/86	79.80	830.10
05/08/86	79.84	830.06
05/09/86	79.80	830.10
05/09/86	79.76	830.14
05/10/86	79.82	830.08
05/10/86	79.77	830.13
05/11/86	79.82	830.08
05/11/86	79.84	830.06
05/11/86	79.90	830.00
05/12/86	79.85	830.05
05/12/86	79.84	830.06
05/13/86	79.85	830.05
05/13/86	79.85	830.05
05/14/86	79.85	830.05
05/14/86	79.86	830.04
05/15/86	79.86	830.04
05/15/86	79.90	830.00
05/16/86	79.96	829.94
05/16/86	79.90	830.00
05/17/86	79.99	829.91
05/17/86	79.96	829.94
05/18/86	79.99	829.91
05/18/86	80.03	829.87
05/19/86	80.06	829.84
05/19/86	80.03	829.87
05/20/86	80.06	829.84
05/20/86	80.08	829.82
05/21/86	80.08	829.82
05/21/86	80.09	829.81
05/22/86	80.19	829.71
05/22/86	80.09	829.81
05/23/86	80.15	829.75
05/23/86	80.19	829.71
05/24/86	80.15	829.75
05/24/86	80.18	829.72
05/25/86	80.21	829.69
05/25/86	80.18	829.72
05/26/86	80.21	829.69
05/26/86	80.31	829.59
05/27/86	80.29	829.61
05/27/86	80.31	829.59
05/28/86	80.31	829.59
05/28/86	80.29	829.61
05/29/86	80.31	829.59
05/29/86	80.38	829.52
05/30/86	80.37	829.53
05/30/86	80.40	829.50
05/31/86	80.43	829.47
05/31/86	80.37	829.53
06/01/86	80.43	829.47
06/01/86	80.54	829.36
06/02/86	80.54	829.36
06/02/86	80.63	829.27
06/03/86	80.61	829.29
06/03/86	80.55	829.35
06/04/86	80.59	829.31
06/04/86	80.78	829.12
06/05/86	80.78	829.12
06/05/86	80.85	829.05
06/06/86	80.81	829.09
06/06/86	80.78	829.12
06/07/86	80.78	829.12
06/07/86	80.88	829.02
06/08/86	80.88	829.02
06/08/86	80.99	828.91
06/08/86	80.99	828.91
06/09/86	81.04	828.86
06/09/86	80.99	828.91
06/10/86	81.04	828.86
06/10/86	81.04	828.86
06/11/86	81.04	828.86
06/11/86	81.12	828.78
06/12/86	81.12	828.78
06/12/86	81.24	828.66
06/13/86	81.41	828.49
06/13/86	81.24	828.66
06/14/86	81.37	828.53
06/14/86	81.39	828.51
06/15/86	81.30	828.60
06/15/86	81.39	828.51
06/16/86	81.36	828.54
06/16/86	81.54	828.36
06/17/86	81.55	828.35
06/17/86	81.50	828.40
06/18/86	81.50	828.40

138-049-22BBA2 **(Continued)** MP Elev (msl,ft)=909.9

West Fargo South Aquifer SI (ft.)=245-250

Date	Depth to Water (ft)	WL Elev (msl, ft)	Date	Depth to Water (ft)	WL Elev (msl, ft)	Date	Depth to Water (ft)	WL Elev (msl, ft)	Date	Depth to Water (ft)	WL Elev (msl, ft)
06/18/86	81.53	828.37	08/02/86	82.92	826.98	12/02/86	82.95	826.95	01/12/87	81.98	827.92
06/19/86	81.53	828.37	08/03/86	82.96	826.94	12/03/86	82.99	826.91	01/13/87	81.91	827.99
06/19/86	81.67	828.23	08/03/86	82.97	826.93	12/03/86	83.03	826.87	01/13/87	81.96	827.94
06/20/86	81.58	828.32	08/04/86	82.97	826.93	12/04/86	83.03	826.87	01/14/87	82.01	827.89
06/20/86	81.65	828.25	08/04/86	82.97	826.93	12/04/86	83.05	826.85	01/14/87	81.93	827.97
06/21/86	81.60	828.30	08/05/86	82.97	826.93	12/05/86	83.05	826.85	01/15/87	82.03	827.87
06/21/86	81.57	828.33	08/05/86	82.96	826.94	12/05/86	82.96	826.94	01/15/87	82.01	827.89
06/22/86	81.60	828.30	08/06/86	82.95	826.95	12/06/86	83.00	826.90	01/16/87	82.03	827.87
06/22/86	81.66	828.24	08/06/86	82.97	826.93	12/06/86	83.05	826.85	01/16/87	81.94	827.96
06/23/86	81.66	828.24	08/07/86	82.95	826.95	12/06/86	83.09	826.81	01/17/87	81.86	828.04
06/23/86	81.76	828.14	08/07/86	82.95	826.95	12/07/86	82.99	826.91	01/17/87	81.94	827.96
06/24/86	81.76	828.14	08/08/86	82.95	826.95	12/07/86	82.93	826.97	01/18/87	81.77	828.13
06/24/86	81.82	828.08	08/08/86	82.96	826.94	12/08/86	82.92	826.98	01/18/87	81.86	828.04
06/25/86	81.85	828.05	08/09/86	82.99	826.91	12/08/86	82.87	827.03	01/19/87	81.77	828.13
06/25/86	81.81	828.09	08/09/86	82.96	826.94	12/09/86	82.88	827.02	01/19/87	81.75	828.15
06/26/86	81.83	828.07	08/10/86	83.04	826.86	12/09/86	82.89	827.01	01/20/87	81.65	828.25
06/26/86	81.87	828.03	08/10/86	83.00	826.90	12/10/86	82.89	827.01	01/20/87	81.77	828.13
06/27/86	81.87	828.03	08/11/86	83.07	826.83	12/10/86	82.74	827.16	01/21/87	81.61	828.29
06/27/86	82.04	827.86	08/11/86	83.04	826.86	12/11/86	82.81	827.09	01/21/87	81.66	828.24
06/28/86	81.99	827.91	08/12/86	83.07	826.83	12/11/86	82.74	827.16	01/22/87	81.66	828.24
06/28/86	82.04	827.86	08/12/86	83.06	826.84	12/12/86	82.81	827.09	01/22/87	81.64	828.26
06/29/86	82.10	827.80	08/13/86	83.06	826.84	12/12/86	82.88	827.02	01/23/87	81.63	828.27
06/29/86	82.04	827.86	08/13/86	83.01	826.89	12/13/86	82.88	827.02	01/23/87	81.53	828.37
06/30/86	82.10	827.80	08/14/86	83.00	826.90	12/13/86	82.73	827.17	01/24/87	81.53	828.37
06/30/86	82.11	827.79	08/14/86	83.01	826.89	12/14/86	82.74	827.16	01/24/87	81.49	828.41
07/01/86	82.11	827.79	08/15/86	83.00	826.90	12/14/86	82.73	827.17	01/25/87	81.44	828.46
07/01/86	82.22	827.68	08/15/86	82.99	826.91	12/15/86	82.72	827.18	01/25/87	81.49	828.41
07/02/86	82.22	827.68	08/16/86	83.03	826.87	12/15/86	82.74	827.16	01/26/87	81.32	828.58
07/02/86	82.36	827.54	08/16/86	82.99	826.91	12/16/86	82.66	827.24	01/26/87	81.43	828.47
07/03/86	82.38	827.52	08/17/86	83.03	826.87	12/16/86	82.72	827.18	01/27/87	81.29	828.61
07/03/86	82.30	827.60	08/17/86	83.09	826.81	12/17/86	82.67	827.23	01/27/87	81.32	828.58
07/03/86	82.45	827.45	08/18/86	83.09	826.81	12/17/86	82.67	827.23	01/28/87	81.18	828.72
07/04/86	82.25	827.65	08/18/86	83.09	826.81	12/18/86	82.67	827.23	01/28/87	81.29	828.61
07/04/86	82.29	827.61	08/19/86	83.09	826.81	12/18/86	82.61	827.29	01/29/87	81.11	828.79
07/05/86	82.25	827.65	08/19/86	83.08	826.82	12/19/86	82.63	827.27	01/29/87	81.18	828.72
07/05/86	82.38	827.52	08/20/86	83.12	826.78	12/19/86	82.62	827.28	01/30/87	81.16	828.74
07/06/86	82.39	827.51	08/20/86	83.05	826.85	12/20/86	82.64	827.26	01/30/87	81.14	828.76
07/06/86	82.51	827.39	08/21/86	83.15	826.75	12/20/86	82.63	827.27	01/31/87	81.14	828.76
07/13/86	82.60	827.30	08/21/86	83.12	826.78	12/21/86	82.57	827.33	01/31/87	81.03	828.87
07/13/86	82.50	827.40	08/22/86	83.13	826.77	12/21/86	82.64	827.26	02/01/87	81.03	828.87
07/14/86	82.60	827.30	08/22/86	83.15	826.75	12/22/86	82.57	827.33	02/01/87	80.98	828.92
07/14/86	82.65	827.25	08/23/86	83.13	826.77	12/22/86	82.54	827.36	02/02/87	80.93	828.97
07/15/86	82.65	827.25	08/23/86	83.13	826.77	12/23/86	82.49	827.41	02/02/87	81.02	828.88
07/15/86	82.65	827.25	08/24/86	83.13	826.77	12/23/86	82.54	827.36	02/03/87	81.03	828.87
07/16/86	82.65	827.25	08/24/86	83.13	826.77	12/24/86	82.49	827.41	02/03/87	81.06	828.84
07/16/86	82.65	827.25	08/25/86	83.13	826.77	12/24/86	82.46	827.44	02/04/87	81.06	828.84
07/17/86	82.66	827.24	08/25/86	83.13	826.77	12/25/86	82.49	827.41	02/04/87	81.09	828.81
07/17/86	82.65	827.25	08/26/86	83.13	826.77	12/25/86	82.46	827.44	02/05/87	81.06	828.84
07/18/86	82.66	827.24	08/26/86	83.11	826.79	12/26/86	82.49	827.41	02/05/87	81.09	828.81
07/18/86	82.72	827.18	08/27/86	83.11	826.79	12/26/86	82.45	827.45	02/06/87	81.05	828.85
07/19/86	82.72	827.18	08/27/86	83.11	826.79	12/27/86	82.41	827.49	02/06/87	81.00	828.90
07/19/86	82.78	827.12	08/28/86	83.11	826.79	12/27/86	82.45	827.45	02/07/87	81.01	828.89
07/20/86	82.79	827.11	08/28/86	83.11	826.79	12/28/86	82.42	827.48	02/07/87	80.91	828.99
07/20/86	82.83	827.07	08/29/86	83.11	826.79	12/28/86	82.37	827.53	02/08/87	81.05	828.85
07/21/86	82.83	827.07	08/29/86	83.11	826.79	12/29/86	82.38	827.52	02/08/87	81.00	828.90
07/21/86	82.83	827.07	08/30/86	83.22	826.68	12/29/86	82.40	827.50	02/09/87	80.93	828.97
07/22/86	82.83	827.07	08/30/86	83.11	826.79	12/30/86	82.40	827.50	02/09/87	81.00	828.90
07/22/86	82.86	827.04	08/30/86	83.08	826.82	12/30/86	82.29	827.61	02/10/87	80.94	828.96
07/23/86	82.86	827.04	08/31/86	83.08	826.82	12/31/86	82.26	827.64	02/10/87	80.95	828.95
07/23/86	82.86	827.04	08/31/86	83.08	826.82				02/11/87	80.90	829.00
07/24/86	82.85	827.05	09/01/86	83.08	826.82	01/02/87	82.24	827.66	02/11/87	80.94	828.96
07/24/86	82.86	827.04	09/01/86	83.08	826.82	01/03/87	82.25	827.65	02/12/87	80.96	828.94
07/25/86	82.89	827.01	09/02/86	83.04	826.86	01/03/87	82.24	827.66	02/12/87	80.94	828.96
07/25/86	82.86	827.04	09/02/86	83.08	826.82	01/04/87	82.24	827.66	02/13/87	80.93	828.97
07/26/86	82.85	827.05	09/03/86	83.04	826.86	01/04/87	82.17	827.73	02/13/87	80.89	829.01
07/26/86	82.89	827.01	09/04/86	83.01	826.89	01/05/87	82.14	827.76	02/14/87	80.91	828.99
07/27/86	82.85	827.05	10/10/86	83.10	826.80	01/05/87	82.17	827.73	02/14/87	80.90	829.00
07/27/86	82.85	827.05	11/01/86	83.23	826.67	01/06/87	82.13	827.77	02/15/87	80.92	828.98
07/28/86	82.85	827.05	11/26/86	82.97	826.93	01/06/87	82.17	827.73	02/15/87	80.91	828.99
07/28/86	82.85	827.05	11/27/86	82.98	826.92	01/07/87	82.16	827.74	02/16/87	80.91	828.99
07/29/86	82.88	827.02	11/27/86	82.96	826.94	01/07/87	82.17	827.73	02/16/87	80.92	828.98
07/29/86	82.85	827.05	11/28/86	82.97	826.93	01/08/87	82.16	827.74	02/17/87	80.90	829.00
07/30/86	82.86	827.04	11/28/86	83.02	826.88	01/08/87	82.08	827.82	02/17/87	80.91	828.99
07/30/86	82.88	827.02	11/29/86	83.02	826.88	01/09/87	82.09	827.81	02/18/87	80.89	829.01
07/31/86	82.87	827.03	11/29/86	83.06	826.84	01/09/87	82.06	827.84	02/18/87	80.90	829.00
07/31/86	82.89	827.01	11/30/86	83.06	826.84	01/10/87	82.09	827.81	02/19/87	80.89	829.01
08/01/86	82.89	827.01	11/30/86	83.09	826.81	01/10/87	82.05	827.85	02/19/87	80.90	829.00
08/01/86	82.92	826.98	12/01/86	83.09	826.81	01/11/87	81.97	827.93	02/20/87	80.90	829.00
08/01/86	83.08	826.82	12/01/86	83.03	826.87	01/11/87	82.04	827.86	02/20/87	80.82	829.08
08/02/86	82.96	826.94	12/02/86	83.03	826.87	01/12/87	81.97	827.93	02/21/87	80.81	829.09

138-049-22BBA2 **(Continued)** MP Elev (msl,ft)=909.9

West Fargo South Aquifer SI (ft.)=245-250

Date	Depth to Water (ft)	WL Elev (msl, ft)	Date	Depth to Water (ft)	WL Elev (msl, ft)	Date	Depth to Water (ft)	WL Elev (msl, ft)	Date	Depth to Water (ft)	WL Elev (msl, ft)
02/21/87	80.78	829.12	04/02/87	80.68	829.22	05/12/87	82.07	827.83	06/20/87	84.64	825.26
02/22/87	80.82	829.08	04/03/87	80.68	829.22	05/12/87	82.10	827.80	06/21/87	84.72	825.18
02/22/87	80.81	829.09	04/03/87	80.68	829.22	05/13/87	82.07	827.83	06/21/87	84.64	825.26
02/23/87	80.84	829.06	04/04/87	80.71	829.19	05/13/87	82.18	827.72	06/22/87	84.78	825.12
02/23/87	80.82	829.08	04/04/87	80.68	829.22	05/14/87	82.18	827.72	06/22/87	84.72	825.18
02/24/87	80.84	829.06	04/05/87	80.71	829.19	05/14/87	82.38	827.52	06/23/87	84.79	825.11
02/24/87	80.84	829.06	04/05/87	80.73	829.17	05/15/87	82.45	827.45	06/23/87	84.95	824.95
02/25/87	80.84	829.06	04/06/87	80.73	829.17	05/15/87	82.37	827.53	06/24/87	84.95	824.95
02/25/87	80.82	829.08	04/06/87	80.73	829.17	05/16/87	82.46	827.44	06/24/87	85.05	824.85
02/26/87	80.82	829.08	04/07/87	80.70	829.20	05/16/87	82.40	827.50	06/25/87	85.15	824.75
02/26/87	80.79	829.11	04/07/87	80.73	829.17	05/17/87	82.47	827.43	06/25/87	85.05	824.85
02/27/87	80.80	829.10	04/08/87	80.64	829.26	05/17/87	82.51	827.39	06/26/87	85.27	824.63
02/27/87	80.77	829.13	04/08/87	80.69	829.21	05/18/87	82.49	827.41	06/26/87	85.16	824.74
02/28/87	80.69	829.21	04/09/87	80.58	829.32	05/18/87	82.56	827.34	06/27/87	85.26	824.64
02/28/87	80.77	829.13	04/09/87	80.63	829.27	05/19/87	82.56	827.34	06/27/87	85.32	824.58
03/01/87	80.69	829.21	04/10/87	80.61	829.29	05/19/87	82.66	827.24	06/27/87	85.28	824.62
03/01/87	80.67	829.23	04/10/87	80.59	829.31	05/20/87	82.73	827.17	06/28/87	85.26	824.64
03/02/87	80.67	829.23	04/11/87	80.60	829.30	05/20/87	82.66	827.24	06/28/87	85.31	824.59
03/02/87	80.75	829.15	04/11/87	80.64	829.26	05/21/87	82.74	827.16	06/29/87	85.31	824.59
03/03/87	80.73	829.17	04/12/87	80.69	829.21	05/21/87	82.85	827.05	06/29/87	85.52	824.38
03/03/87	80.76	829.14	04/12/87	80.64	829.26	05/22/87	82.96	826.94	06/30/87	85.66	824.24
03/04/87	80.71	829.19	04/13/87	80.73	829.17	05/22/87	82.86	827.04	06/30/87	85.53	824.37
03/04/87	80.73	829.17	04/13/87	80.69	829.21	05/23/87	82.96	826.94	07/01/87	85.66	824.24
03/05/87	80.68	829.22	04/14/87	80.71	829.19	05/23/87	83.01	826.89	07/01/87	85.57	824.33
03/05/87	80.71	829.19	04/14/87	80.73	829.17	05/24/87	83.01	826.89	07/02/87	85.57	824.33
03/06/87	80.67	829.23	04/15/87	80.69	829.21	05/24/87	83.04	826.86	07/02/87	85.67	824.23
03/06/87	80.64	829.26	04/15/87	80.71	829.19	05/25/87	82.99	826.91	07/03/87	85.67	824.23
03/07/87	80.64	829.26	04/16/87	80.69	829.21	05/25/87	83.04	826.86	07/03/87	85.88	824.02
03/07/87	80.67	829.23	04/16/87	80.72	829.18	05/26/87	82.99	826.91	07/04/87	85.85	824.05
03/08/87	80.78	829.12	04/17/87	80.72	829.18	05/26/87	83.02	826.88	07/04/87	85.80	824.10
03/08/87	80.67	829.23	04/17/87	80.70	829.20	05/27/87	83.02	826.88	07/05/87	85.80	824.10
03/09/87	80.78	829.12	04/18/87	80.74	829.16	05/27/87	83.07	826.83	07/05/87	85.84	824.06
03/09/87	80.78	829.12	04/18/87	80.72	829.18	05/28/87	83.13	826.77	07/06/87	85.92	823.98
03/10/87	80.74	829.16	04/19/87	80.78	829.12	05/28/87	83.07	826.83	07/06/87	85.84	824.06
03/10/87	80.78	829.12	04/19/87	80.74	829.16	05/29/87	83.13	826.77	07/07/87	86.01	823.89
03/11/87	80.72	829.18	04/20/87	80.97	828.93	05/29/87	83.26	826.64	07/07/87	85.92	823.98
03/11/87	80.75	829.15	04/20/87	80.79	829.11	05/30/87	83.24	826.66	07/08/87	86.12	823.78
03/12/87	80.75	829.15	04/21/87	81.02	828.88	05/30/87	83.47	826.43	07/08/87	86.01	823.89
03/12/87	80.73	829.17	04/21/87	80.97	828.93	05/30/87	83.32	826.58	07/09/87	86.13	823.77
03/13/87	80.73	829.17	04/22/87	80.97	828.93	05/31/87	83.28	826.62	07/09/87	86.09	823.81
03/13/87	80.64	829.26	04/22/87	81.01	828.89	05/31/87	83.28	826.62	07/10/87	86.11	823.79
03/14/87	80.64	829.26	04/23/87	81.07	828.83	06/01/87	83.27	826.63	07/10/87	86.24	823.66
03/14/87	80.66	829.24	04/23/87	80.97	828.93	06/01/87	83.37	826.53	07/11/87	86.21	823.69
03/15/87	80.66	829.24	04/24/87	81.09	828.81	06/02/87	83.47	826.43	07/11/87	86.28	823.62
03/15/87	80.68	829.22	04/24/87	81.07	828.83	06/02/87	83.37	826.53	07/12/87	86.28	823.62
03/16/87	80.68	829.22	04/25/87	81.21	828.69	06/03/87	83.56	826.34	07/12/87	86.36	823.54
03/16/87	80.69	829.21	04/25/87	81.15	828.75	06/03/87	83.48	826.42	07/13/87	86.44	823.46
03/17/87	80.66	829.24	04/25/87	81.09	828.81	06/04/87	83.66	826.24	07/13/87	86.36	823.54
03/17/87	80.69	829.21	04/26/87	81.18	828.72	06/04/87	83.56	826.34	07/14/87	86.47	823.43
03/18/87	80.65	829.25	04/26/87	81.13	828.77	06/05/87	83.65	826.25	07/14/87	86.44	823.46
03/18/87	80.63	829.27	04/27/87	81.34	828.56	06/05/87	83.72	826.18	07/15/87	86.50	823.40
03/19/87	80.64	829.26	04/27/87	81.18	828.72	06/06/87	83.70	826.20	07/15/87	86.47	823.43
03/19/87	80.63	829.27	04/28/87	81.30	828.60	06/06/87	83.67	826.23	07/16/87	86.52	823.38
03/20/87	80.64	829.26	04/28/87	81.22	828.68	06/07/87	83.73	826.17	07/16/87	86.49	823.41
03/20/87	80.63	829.27	04/29/87	81.29	828.61	06/07/87	83.67	826.23	07/17/87	86.63	823.27
03/21/87	80.59	829.31	04/29/87	81.24	828.66	06/08/87	83.82	826.08	07/17/87	86.53	823.37
03/21/87	80.63	829.27	04/30/87	81.38	828.52	06/08/87	83.73	826.17	07/18/87	86.64	823.26
03/22/87	80.59	829.31	04/30/87	81.28	828.62	06/09/87	83.86	826.04	07/18/87	86.63	823.27
03/22/87	80.64	829.26	05/01/87	81.25	828.65	06/09/87	83.82	826.08	07/19/87	86.83	823.07
03/23/87	80.64	829.26	05/01/87	81.29	828.61	06/10/87	83.81	826.09	07/19/87	86.64	823.26
03/23/87	80.62	829.28	05/02/87	81.29	828.61	06/10/87	83.85	826.05	07/20/87	86.71	823.19
03/24/87	80.58	829.32	05/02/87	81.40	828.50	06/11/87	83.90	826.00	07/20/87	86.83	823.07
03/24/87	80.63	829.27	05/03/87	81.53	828.37	06/11/87	83.81	826.09	07/21/87	86.82	823.08
03/25/87	80.57	829.33	05/03/87	81.40	828.50	06/12/87	84.06	825.84	07/21/87	86.77	823.13
03/25/87	80.61	829.29	05/04/87	81.53	828.37	06/12/87	83.90	826.00	07/22/87	86.80	823.10
03/26/87	80.59	829.31	05/04/87	81.61	828.29	06/13/87	84.02	825.88	07/22/87	86.80	823.10
03/26/87	80.61	829.29	05/05/87	81.60	828.30	06/13/87	84.08	825.82	07/23/87	86.80	823.10
03/27/87	80.58	829.32	05/05/87	81.59	828.31	06/14/87	84.21	825.69	07/23/87	86.89	823.01
03/27/87	80.70	829.20	05/06/87	81.59	828.31	06/14/87	84.08	825.82	07/24/87	86.90	823.00
03/28/87	80.75	829.15	05/06/87	81.74	828.16	06/15/87	84.21	825.69	07/24/87	86.96	822.94
03/28/87	80.71	829.19	05/07/87	81.83	828.07	06/15/87	84.38	825.52	07/25/87	86.96	822.94
03/29/87	80.74	829.16	05/07/87	81.72	828.18	06/16/87	84.38	825.52	07/25/87	86.98	822.92
03/29/87	80.70	829.20	05/08/87	81.80	828.10	06/16/87	84.36	825.54	07/26/87	86.99	822.91
03/30/87	80.70	829.20	05/08/87	81.75	828.15	06/17/87	84.31	825.59	07/26/87	86.98	822.92
03/30/87	80.63	829.27	05/09/87	81.77	828.13	06/17/87	84.38	825.52	07/27/87	87.00	822.90
03/31/87	80.53	829.37	05/09/87	81.83	828.07	06/18/87	84.38	825.52	07/27/87	86.99	822.91
03/31/87	80.63	829.27	05/10/87	81.81	828.09	06/18/87	84.52	825.38	07/28/87	87.03	822.87
04/01/87	80.55	829.35	05/10/87	81.92	827.98	06/19/87	84.52	825.38	07/28/87	87.00	822.90
04/01/87	80.68	829.22	05/11/87	81.93	827.97	06/19/87	84.62	825.28	07/29/87	87.04	822.86
04/02/87	80.69	829.21	05/11/87	82.09	827.81	06/20/87	84.61	825.29	07/29/87	87.08	822.82

138-049-22BBA2 **(Continued)** MP Elev (msl,ft)=909.9

West Fargo South Aquifer SI (ft.)=245-250

Date	Depth to Water (ft)	WL Elev (msl, ft)	Date	Depth to Water (ft)	WL Elev (msl, ft)	Date	Depth to Water (ft)	WL Elev (msl, ft)	Date	Depth to Water (ft)	WL Elev (msl, ft)
07/30/87	87.08	822.82	09/07/87	88.12	821.78	10/16/87	88.12	821.78	11/25/87	86.46	823.44
07/30/87	87.11	822.79	09/07/87	88.08	821.82	10/17/87	88.03	821.87	11/25/87	86.47	823.43
07/31/87	87.13	822.77	09/08/87	88.12	821.78	10/17/87	88.12	821.78	11/26/87	86.48	823.42
07/31/87	87.11	822.79	09/08/87	88.12	821.78	10/18/87	88.03	821.87	11/26/87	86.48	823.42
08/01/87	87.17	822.73	09/09/87	88.12	821.78	10/18/87	88.01	821.89	11/27/87	86.48	823.42
08/01/87	87.11	822.79	09/09/87	88.16	821.74	10/19/87	87.93	821.97	11/27/87	86.45	823.45
08/01/87	87.15	822.75	09/10/87	88.15	821.75	10/19/87	88.01	821.89	11/28/87	86.39	823.51
08/02/87	87.16	822.74	09/10/87	88.14	821.76	10/20/87	87.89	822.01	11/28/87	86.50	823.40
08/02/87	87.20	822.70	09/11/87	88.27	821.63	10/20/87	87.93	821.97	11/28/87	86.45	823.45
08/03/87	87.25	822.65	09/11/87	88.15	821.75	10/21/87	87.72	822.18	11/29/87	86.36	823.54
08/03/87	87.16	822.74	09/12/87	88.20	821.70	10/21/87	87.89	822.01	11/29/87	86.38	823.52
08/04/87	87.25	822.65	09/12/87	88.25	821.65	10/22/87	87.72	822.18	11/30/87	86.37	823.53
08/04/87	87.30	822.60	09/13/87	88.22	821.68	10/22/87	87.68	822.22	11/30/87	86.35	823.55
08/05/87	87.30	822.60	09/13/87	88.22	821.68	10/23/87	87.59	822.31	12/01/87	86.33	823.57
08/05/87	87.24	822.66	09/14/87	88.22	821.68	10/23/87	87.68	822.22	12/01/87	86.35	823.55
08/06/87	87.35	822.55	09/14/87	88.24	821.66	10/24/87	87.57	822.33	12/02/87	86.27	823.63
08/06/87	87.25	822.65	09/15/87	88.24	821.66	10/24/87	87.60	822.30	12/02/87	86.33	823.57
08/07/87	87.42	822.48	09/15/87	88.28	821.62	10/25/87	87.56	822.34	12/03/87	86.36	823.54
08/07/87	87.35	822.55	09/16/87	88.26	821.64	10/25/87	87.37	822.53	12/03/87	86.27	823.63
08/08/87	87.43	822.47	09/16/87	88.23	821.67	10/26/87	87.36	822.54	12/04/87	86.36	823.54
08/08/87	87.42	822.48	09/17/87	88.24	821.66	10/26/87	87.32	822.58	12/04/87	86.35	823.55
08/09/87	87.43	822.47	09/17/87	88.27	821.63	10/27/87	87.32	822.58	12/05/87	86.35	823.55
08/09/87	87.46	822.44	09/18/87	88.23	821.67	10/27/87	87.33	822.57	12/05/87	86.30	823.60
08/10/87	87.46	822.44	09/18/87	88.28	821.62	10/28/87	87.32	822.58	12/06/87	86.30	823.60
08/10/87	87.48	822.42	09/19/87	88.26	821.64	10/28/87	87.21	822.69	12/06/87	86.30	823.60
08/11/87	87.47	822.43	09/19/87	88.23	821.67	10/29/87	87.14	822.76	12/07/87	86.25	823.65
08/11/87	87.44	822.46	09/20/87	88.31	821.59	10/29/87	87.21	822.69	12/07/87	86.30	823.60
08/12/87	87.48	822.42	09/20/87	88.26	821.64	10/30/87	87.14	822.76	12/08/87	86.25	823.65
08/12/87	87.55	822.35	09/21/87	88.31	821.59	10/30/87	87.16	822.74	12/08/87	86.24	823.66
08/13/87	87.56	822.34	09/21/87	88.35	821.55	10/31/87	86.25	823.65	12/09/87	86.24	823.66
08/13/87	87.55	822.35	09/22/87	88.35	821.55	10/31/87	87.16	822.74	12/09/87	86.24	823.66
08/14/87	87.56	822.34	09/22/87	88.34	821.56	10/31/87	87.13	822.77	12/10/87	86.13	823.77
08/14/87	87.56	822.34	09/23/87	88.34	821.56	11/01/87	87.05	822.85	12/10/87	86.25	823.65
08/15/87	87.57	822.33	09/23/87	88.32	821.58	11/01/87	87.13	822.77	12/11/87	86.12	823.78
08/15/87	87.51	822.39	09/24/87	88.34	821.56	11/02/87	86.97	822.93	12/11/87	86.14	823.76
08/16/87	87.60	822.30	09/24/87	88.36	821.54	11/02/87	87.05	822.85	12/12/87	86.19	823.71
08/16/87	87.54	822.36	09/25/87	88.36	821.54	11/03/87	86.96	822.94	12/12/87	86.13	823.77
08/17/87	87.67	822.23	09/25/87	88.31	821.59	11/03/87	86.88	823.02	12/13/87	86.19	823.71
08/17/87	87.60	822.30	09/26/87	88.38	821.52	11/04/87	86.93	822.97	12/13/87	86.28	823.62
08/18/87	87.71	822.19	09/26/87	88.27	821.63	11/04/87	86.88	823.02	12/14/87	86.28	823.62
08/18/87	87.67	822.23	09/26/87	88.31	821.59	11/05/87	86.94	822.96	12/14/87	86.29	823.61
08/19/87	87.74	822.16	09/27/87	88.27	821.63	11/05/87	86.93	822.97	12/15/87	86.25	823.65
08/19/87	87.71	822.19	09/27/87	88.31	821.59	11/06/87	86.84	823.06	12/15/87	86.28	823.62
08/20/87	87.74	822.16	09/28/87	88.33	821.57	11/06/87	86.93	822.97	12/16/87	86.32	823.58
08/20/87	87.74	822.16	09/28/87	88.32	821.58	11/07/87	86.77	823.13	12/16/87	86.27	823.63
08/21/87	87.81	822.09	09/29/87	88.38	821.52	11/07/87	86.84	823.06	12/17/87	86.25	823.65
08/21/87	87.73	822.17	09/29/87	88.34	821.56	11/08/87	86.85	823.05	12/17/87	86.32	823.58
08/22/87	87.91	821.99	09/30/87	88.35	821.55	11/08/87	86.81	823.09	12/18/87	86.22	823.68
08/22/87	87.81	822.09	09/30/87	88.41	821.49	11/09/87	86.85	823.05	12/18/87	86.25	823.65
08/23/87	87.94	821.96	10/01/87	88.40	821.50	11/09/87	86.85	823.05	12/19/87	86.19	823.71
08/23/87	87.91	821.99	10/01/87	88.30	821.60	11/10/87	86.78	823.12	12/19/87	86.22	823.68
08/24/87	87.93	821.97	10/02/87	88.41	821.49	11/10/87	86.85	823.05	12/19/87	86.29	823.61
08/24/87	87.94	821.96	10/02/87	88.47	821.43	11/11/87	86.78	823.12	12/20/87	86.20	823.70
08/25/87	87.94	821.96	10/03/87	88.40	821.50	11/11/87	86.68	823.22	12/20/87	86.19	823.71
08/25/87	87.93	821.97	10/03/87	88.46	821.44	11/12/87	86.64	823.26	12/21/87	86.18	823.72
08/26/87	87.94	821.96	10/04/87	88.39	821.51	11/12/87	86.68	823.22	12/21/87	86.20	823.70
08/26/87	87.92	821.98	10/04/87	88.34	821.56	11/13/87	86.64	823.26	12/22/87	86.19	823.71
08/27/87	87.95	821.95	10/05/87	88.38	821.52	11/13/87	86.63	823.27	12/22/87	86.18	823.72
08/27/87	87.93	821.97	10/05/87	88.32	821.58	11/14/87	86.63	823.27	12/23/87	86.24	823.66
08/28/87	87.95	821.95	10/06/87	88.38	821.52	11/14/87	86.57	823.33	12/23/87	86.20	823.70
08/28/87	87.96	821.94	10/06/87	88.42	821.48	11/15/87	86.57	823.33	12/24/87	86.25	823.65
08/29/87	87.92	821.98	10/07/87	88.39	821.51	11/15/87	86.55	823.35	12/24/87	86.25	823.65
08/29/87	87.96	821.94	10/07/87	88.42	821.48	11/16/87	86.48	823.42	12/25/87	86.27	823.63
08/29/87	87.84	822.06	10/08/87	88.39	821.51	11/16/87	86.55	823.35	12/25/87	86.25	823.65
08/30/87	88.02	821.88	10/08/87	88.32	821.58	11/17/87	86.51	823.39	12/26/87	86.26	823.64
08/30/87	87.95	821.95	10/09/87	88.37	821.53	11/17/87	86.46	823.44	12/26/87	86.27	823.63
08/31/87	88.02	821.88	10/09/87	88.46	821.44	11/18/87	86.51	823.39	12/27/87	86.29	823.61
08/31/87	88.05	821.85	10/10/87	88.47	821.43	11/18/87	86.48	823.42	12/27/87	86.26	823.64
09/01/87	88.06	821.84	10/10/87	88.45	821.45	11/19/87	86.48	823.42	12/28/87	86.32	823.58
09/01/87	88.03	821.87	10/11/87	88.45	821.45	11/19/87	86.54	823.36	12/28/87	86.29	823.61
09/02/87	88.05	821.85	10/11/87	88.36	821.54	11/20/87	86.52	823.38	12/29/87	86.24	823.66
09/02/87	88.07	821.83	10/12/87	88.30	821.60	11/20/87	86.55	823.35	12/29/87	86.32	823.58
09/03/87	88.02	821.88	10/12/87	88.36	821.54	11/21/87	86.52	823.38	12/30/87	86.24	823.66
09/03/87	88.05	821.85	10/13/87	88.30	821.60	11/21/87	86.38	823.52	12/30/87	86.15	823.75
09/04/87	88.07	821.83	10/13/87	88.24	821.66	11/22/87	86.38	823.52	12/31/87	86.18	823.72
09/04/87	88.02	821.88	10/14/87	88.27	821.63	11/22/87	86.35	823.55	12/31/87	86.26	823.64
09/05/87	88.07	821.83	10/14/87	88.25	821.65	11/23/87	86.37	823.53			
09/05/87	88.08	821.82	10/15/87	88.17	821.73	11/23/87	86.44	823.46	01/01/88	86.27	823.63
09/06/87	88.08	821.82	10/15/87	88.27	821.63	11/24/87	86.46	823.44	01/01/88	86.26	823.64
09/06/87	88.08	821.82	10/16/87	88.16	821.74	11/24/87	86.45	823.45	01/02/88	86.25	823.65

138-049-22BBA2 **(Continued)** MP Elev (msl,ft)=909.9

West Fargo South Aquifer SI (ft.)=245-250

Date	Depth to Water (ft)	WL Elev (msl, ft)	Date	Depth to Water (ft)	WL Elev (msl, ft)	Date	Depth to Water (ft)	WL Elev (msl, ft)	Date	Depth to Water (ft)	WL Elev (msl, ft)
01/02/88	86.20	823.70	02/11/88	85.96	823.94	03/22/88	85.46	824.44	04/30/88	85.79	824.11
01/03/88	86.20	823.70	02/12/88	85.90	824.00	03/23/88	85.45	824.45	05/01/88	85.79	824.11
01/03/88	86.25	823.65	02/12/88	85.95	823.95	03/23/88	85.44	824.46	05/01/88	85.78	824.12
01/04/88	86.33	823.57	02/13/88	85.90	824.00	03/24/88	85.36	824.54	05/02/88	85.83	824.07
01/04/88	86.26	823.64	02/13/88	85.76	824.14	03/24/88	85.43	824.47	05/02/88	85.79	824.11
01/05/88	86.34	823.56	02/14/88	85.75	824.15	03/25/88	85.33	824.57	05/03/88	86.04	823.86
01/05/88	86.36	823.54	02/14/88	85.79	824.11	03/25/88	85.41	824.49	05/03/88	85.84	824.06
01/06/88	86.36	823.54	02/15/88	85.79	824.11	03/26/88	85.50	824.40	05/04/88	86.00	823.90
01/06/88	86.35	823.55	02/15/88	85.73	824.17	03/26/88	85.41	824.49	05/04/88	86.03	823.87
01/07/88	86.34	823.56	02/16/88	85.76	824.14	03/27/88	85.50	824.40	05/05/88	86.01	823.89
01/07/88	86.29	823.61	02/16/88	85.72	824.18	03/27/88	85.42	824.48	05/05/88	86.08	823.82
01/08/88	86.29	823.61	02/17/88	85.75	824.15	03/28/88	85.45	824.45	05/06/88	85.98	823.92
01/08/88	86.29	823.61	02/17/88	85.76	824.14	03/28/88	85.42	824.48	05/06/88	86.08	823.82
01/09/88	86.30	823.60	02/18/88	85.75	824.15	03/29/88	85.45	824.45	05/07/88	85.97	823.93
01/09/88	86.28	823.62	02/18/88	85.74	824.16	03/29/88	85.47	824.43	05/07/88	85.91	823.99
01/10/88	86.19	823.71	02/19/88	85.65	824.25	03/30/88	85.57	824.33	05/08/88	85.97	823.93
01/10/88	86.28	823.62	02/19/88	85.74	824.16	03/30/88	85.48	824.42	05/08/88	85.91	823.99
01/11/88	86.19	823.71	02/20/88	85.74	824.16	03/31/88	85.59	824.31	05/09/88	85.97	823.93
01/11/88	86.10	823.80	02/20/88	85.71	824.19	03/31/88	85.57	824.33	05/09/88	86.07	823.83
01/12/88	86.22	823.68	02/21/88	85.71	824.19	04/01/88	85.55	824.35	05/10/88	86.07	823.83
01/12/88	86.10	823.80	02/21/88	85.51	824.39	04/01/88	85.59	824.31	05/10/88	86.21	823.69
01/13/88	86.22	823.68	02/22/88	85.51	824.39	04/02/88	85.55	824.35	05/11/88	86.29	823.61
01/13/88	86.27	823.63	02/22/88	85.65	824.25	04/02/88	85.48	824.42	05/11/88	86.21	823.69
01/14/88	86.27	823.63	02/23/88	85.69	824.21	04/02/88	85.65	824.25	05/12/88	86.24	823.66
01/14/88	86.15	823.75	02/23/88	85.66	824.24	04/03/88	85.43	824.47	05/12/88	86.34	823.56
01/15/88	86.03	823.87	02/24/88	85.69	824.21	04/03/88	85.47	824.43	05/13/88	86.38	823.52
01/15/88	86.15	823.75	02/24/88	85.72	824.18	04/04/88	85.43	824.47	05/13/88	86.34	823.56
01/16/88	86.07	823.83	02/25/88	85.72	824.18	04/04/88	85.39	824.51	05/14/88	86.38	823.52
01/16/88	85.99	823.91	02/25/88	85.64	824.26	04/05/88	85.41	824.49	05/14/88	86.31	823.59
01/17/88	86.10	823.80	02/26/88	85.67	824.23	04/05/88	85.48	824.42	05/15/88	86.35	823.55
01/17/88	86.07	823.83	02/26/88	85.62	824.28	04/06/88	85.49	824.41	05/15/88	86.45	823.45
01/18/88	86.10	823.80	02/27/88	85.67	824.23	04/06/88	85.48	824.42	05/16/88	86.45	823.45
01/18/88	86.13	823.77	02/27/88	85.63	824.27	04/07/88	85.49	824.41	05/16/88	86.59	823.31
01/19/88	86.14	823.76	02/28/88	85.64	824.26	04/07/88	85.44	824.46	05/17/88	86.55	823.35
01/19/88	86.13	823.77	02/28/88	85.61	824.29	04/08/88	85.41	824.49	05/17/88	86.59	823.31
01/20/88	86.13	823.77	02/29/88	85.67	824.23	04/08/88	85.50	824.40	05/18/88	86.60	823.30
01/20/88	86.14	823.76	02/29/88	85.64	824.26	04/09/88	85.58	824.32	05/18/88	86.53	823.37
01/21/88	86.13	823.77	03/01/88	85.57	824.33	04/09/88	85.50	824.40	05/19/88	86.71	823.19
01/21/88	86.10	823.80	03/01/88	85.65	824.25	04/10/88	85.58	824.32	05/19/88	86.59	823.31
01/22/88	86.11	823.79	03/02/88	85.68	824.22	04/10/88	85.58	824.32	05/20/88	86.73	823.17
01/22/88	86.09	823.81	03/02/88	85.65	824.25	04/11/88	85.55	824.35	05/20/88	86.71	823.19
01/23/88	86.00	823.90	03/03/88	85.68	824.22	04/11/88	85.58	824.32	05/21/88	86.71	823.19
01/23/88	86.08	823.82	03/03/88	85.65	824.25	04/12/88	85.55	824.35	05/21/88	86.73	823.17
01/24/88	86.11	823.79	03/04/88	85.65	824.25	04/12/88	85.53	824.37	05/22/88	86.73	823.17
01/24/88	85.99	823.91	03/04/88	85.65	824.25	04/13/88	85.53	824.37	05/22/88	86.77	823.13
01/25/88	86.11	823.79	03/05/88	85.57	824.33	04/13/88	85.57	824.33	05/23/88	86.77	823.13
01/25/88	86.11	823.79	03/05/88	85.65	824.25	04/14/88	85.57	824.33	05/23/88	86.80	823.10
01/26/88	86.11	823.79	03/06/88	85.58	824.32	04/14/88	85.59	824.31	05/24/88	86.80	823.10
01/26/88	86.11	823.79	03/06/88	85.57	824.33	04/15/88	85.63	824.27	05/24/88	86.90	823.00
01/27/88	86.12	823.78	03/07/88	85.57	824.33	04/15/88	85.58	824.32	05/25/88	86.88	823.02
01/27/88	86.11	823.79	03/07/88	85.52	824.38	04/16/88	85.62	824.28	05/25/88	86.90	823.00
01/28/88	86.04	823.86	03/08/88	85.52	824.38	04/16/88	85.48	824.42	05/26/88	86.88	823.02
01/28/88	86.12	823.78	03/08/88	85.49	824.41	04/17/88	85.58	824.32	05/26/88	86.94	822.96
01/29/88	86.04	823.86	03/09/88	85.50	824.40	04/17/88	85.50	824.40	05/27/88	86.89	823.01
01/29/88	85.97	823.93	03/09/88	85.52	824.38	04/18/88	85.57	824.33	05/27/88	86.94	822.96
01/30/88	85.94	823.96	03/10/88	85.50	824.40	04/18/88	85.58	824.32	05/27/88	87.00	822.90
01/30/88	85.97	823.93	03/10/88	85.47	824.43	04/19/88	85.58	824.32	05/28/88	86.93	822.97
01/31/88	86.06	823.84	03/11/88	85.47	824.43	04/19/88	85.54	824.36	05/28/88	86.94	822.96
01/31/88	85.94	823.96	03/11/88	85.45	824.45	04/20/88	85.59	824.31	05/29/88	86.93	822.97
02/01/88	86.08	823.82	03/12/88	85.45	824.45	04/20/88	85.54	824.36	05/29/88	86.96	822.94
02/01/88	86.07	823.83	03/12/88	85.51	824.39	04/21/88	85.59	824.31	05/30/88	86.96	822.94
02/02/88	86.04	823.86	03/13/88	85.54	824.36	04/21/88	85.59	824.31	05/30/88	87.01	822.89
02/02/88	86.08	823.82	03/13/88	85.51	824.39	04/22/88	85.61	824.29	05/31/88	87.19	822.71
02/03/88	86.08	823.82	03/14/88	85.53	824.37	04/22/88	85.59	824.31	05/31/88	87.02	822.88
02/03/88	86.04	823.86	03/14/88	85.54	824.36	04/23/88	85.61	824.29	06/01/88	87.23	822.67
02/04/88	86.08	823.82	03/15/88	85.56	824.34	04/23/88	85.63	824.27	06/01/88	87.19	822.71
02/04/88	86.08	823.82	03/15/88	85.53	824.37	04/24/88	85.63	824.27	06/02/88	87.22	822.68
02/05/88	86.09	823.81	03/16/88	85.56	824.34	04/24/88	85.59	824.31	06/02/88	87.33	822.57
02/05/88	86.07	823.83	03/16/88	85.56	824.34	04/25/88	85.63	824.27	06/03/88	87.34	822.56
02/06/88	86.07	823.83	03/17/88	85.56	824.34	04/25/88	85.73	824.17	06/03/88	87.33	822.57
02/06/88	85.93	823.97	03/17/88	85.55	824.35	04/26/88	85.77	824.13	06/04/88	87.40	822.50
02/07/88	85.93	823.97	03/18/88	85.55	824.35	04/26/88	85.69	824.21	06/04/88	87.34	822.56
02/07/88	85.98	823.92	03/18/88	85.52	824.38	04/27/88	85.81	824.09	06/05/88	87.54	822.36
02/08/88	85.98	823.92	03/19/88	85.48	824.42	04/27/88	85.75	824.15	06/05/88	87.41	822.49
02/08/88	85.96	823.94	03/19/88	85.52	824.38	04/28/88	85.78	824.12	06/06/88	87.65	822.25
02/09/88	85.96	823.94	03/20/88	85.49	824.41	04/28/88	85.78	824.12	06/06/88	87.54	822.36
02/09/88	85.98	823.92	03/20/88	85.48	824.42	04/29/88	85.78	824.12	06/07/88	87.63	822.27
02/10/88	86.05	823.85	03/21/88	85.49	824.41	04/29/88	85.78	824.12	06/07/88	87.65	822.25
02/10/88	85.98	823.92	03/21/88	85.47	824.43	04/30/88	85.67	824.23	06/08/88	87.79	822.11
02/11/88	86.05	823.85	03/22/88	85.44	824.46	04/30/88	85.78	824.12	06/08/88	87.63	822.27

138-049-22BBA2 **(Continued)** MP Elev (msl,ft)=909.9

West Fargo South Aquifer SI (ft.)=245-250

Date	Depth to Water (ft)	WL Elev (msl, ft)	Date	Depth to Water (ft)	WL Elev (msl, ft)	Date	Depth to Water (ft)	WL Elev (msl, ft)	Date	Depth to Water (ft)	WL Elev (msl, ft)
06/09/88	87.79	822.11	08/07/88	90.70	819.20	09/16/88	91.72	818.18	10/25/88	90.79	819.11
06/09/88	87.97	821.93	08/08/88	90.75	819.15	09/16/88	91.66	818.24	10/25/88	90.80	819.10
06/10/88	87.97	821.93	08/08/88	90.70	819.20	09/17/88	91.78	818.12	10/26/88	90.80	819.10
06/10/88	88.03	821.87	08/09/88	90.74	819.16	09/17/88	91.66	818.24	10/26/88	90.68	819.22
06/11/88	88.05	821.85	08/09/88	90.77	819.13	09/17/88	91.67	818.23	10/27/88	90.64	819.26
06/11/88	87.99	821.91	08/10/88	90.75	819.15	09/18/88	91.58	818.32	10/27/88	90.72	819.18
06/12/88	88.04	821.86	08/10/88	90.72	819.18	09/18/88	91.70	818.20	10/28/88	90.78	819.12
06/12/88	88.10	821.80	08/11/88	90.76	819.14	09/19/88	91.51	818.39	10/28/88	90.73	819.17
06/13/88	88.10	821.80	08/11/88	90.81	819.09	09/19/88	91.58	818.32	10/29/88	90.79	819.11
06/13/88	88.25	821.65	08/12/88	90.80	819.10	09/20/88	91.68	818.22	10/29/88	90.80	819.10
06/14/88	88.13	821.77	08/12/88	90.89	819.01	09/20/88	91.57	818.33	10/30/88	90.65	819.25
06/14/88	88.24	821.66	08/13/88	90.83	819.07	09/21/88	91.69	818.21	10/30/88	90.80	819.10
06/15/88	88.21	821.69	08/13/88	90.87	819.03	09/21/88	91.65	818.25	10/31/88	90.64	819.26
06/15/88	88.29	821.61	08/14/88	90.89	819.01	09/22/88	91.65	818.25	10/31/88	90.61	819.29
06/16/88	88.29	821.61	08/14/88	90.88	819.02	09/22/88	91.63	818.27	11/01/88	90.62	819.28
06/16/88	88.33	821.57	08/15/88	90.88	819.02	09/23/88	91.68	818.22	11/01/88	90.59	819.31
06/17/88	88.32	821.58	08/15/88	90.86	819.04	09/23/88	91.65	818.25	11/02/88	90.46	819.44
06/17/88	88.32	821.58	08/16/88	90.86	819.04	09/24/88	91.68	818.22	11/02/88	90.58	819.32
06/18/88	88.32	821.58	08/16/88	90.85	819.05	09/24/88	91.64	818.26	11/03/88	90.45	819.45
06/18/88	88.32	821.58	08/17/88	90.87	819.03	09/25/88	91.72	818.18	11/03/88	90.39	819.51
06/19/88	88.50	821.40	08/17/88	91.00	818.90	09/25/88	91.68	818.22	11/04/88	90.37	819.53
06/19/88	88.33	821.57	08/18/88	91.00	818.90	09/26/88	91.69	818.21	11/04/88	90.39	819.51
06/20/88	88.50	821.40	08/18/88	91.04	818.86	09/26/88	91.66	818.24	11/05/88	90.49	819.41
06/20/88	88.67	821.23	08/19/88	91.05	818.85	09/27/88	91.72	818.18	11/05/88	90.42	819.48
06/21/88	88.62	821.28	08/19/88	91.06	818.84	09/27/88	91.71	818.19	11/05/88	90.39	819.51
06/21/88	88.57	821.33	08/20/88	91.11	818.79	09/28/88	91.67	818.23	11/06/88	90.41	819.49
06/22/88	88.59	821.31	08/20/88	91.04	818.86	09/28/88	91.72	818.18	11/06/88	90.34	819.56
06/22/88	88.68	821.22	08/20/88	91.01	818.89	09/29/88	91.67	818.23	11/07/88	90.34	819.56
06/23/88	88.68	821.22	08/21/88	91.01	818.89	09/29/88	91.67	818.23	11/07/88	90.30	819.60
06/23/88	88.69	821.21	08/21/88	90.99	818.91	09/30/88	91.67	818.23	11/08/88	90.31	819.59
06/24/88	88.68	821.22	08/22/88	91.04	818.86	09/30/88	91.59	818.31	11/08/88	90.31	819.59
06/24/88	88.74	821.16	08/22/88	91.01	818.89	10/01/88	91.59	818.31	11/09/88	90.31	819.59
06/24/88	88.68	821.22	08/23/88	91.04	818.86	10/01/88	91.61	818.29	11/09/88	90.26	819.64
06/25/88	88.86	821.04	08/23/88	91.08	818.82	10/02/88	91.62	818.28	11/10/88	90.29	819.61
06/25/88	88.75	821.15	08/24/88	91.08	818.82	10/02/88	91.60	818.30	11/10/88	90.31	819.59
06/26/88	88.86	821.04	08/24/88	91.13	818.77	10/03/88	91.60	818.30	11/11/88	90.31	819.59
06/26/88	88.97	820.93	08/25/88	91.10	818.80	10/03/88	91.64	818.26	11/11/88	90.23	819.67
06/27/88	88.88	821.02	08/25/88	91.13	818.77	10/04/88	91.67	818.23	11/12/88	90.23	819.67
06/27/88	88.94	820.96	08/26/88	91.11	818.79	10/04/88	91.64	818.26	11/12/88	90.11	819.79
06/28/88	88.94	820.96	08/26/88	91.10	818.80	10/05/88	91.66	818.24	11/13/88	90.07	819.83
06/28/88	88.94	820.96	08/27/88	91.15	818.75	10/05/88	91.61	818.29	11/13/88	90.11	819.79
06/29/88	89.02	820.88	08/27/88	91.11	818.79	10/06/88	91.61	818.29	11/14/88	90.11	819.79
06/29/88	89.02	820.88	08/28/88	91.21	818.69	10/06/88	91.57	818.33	11/14/88	90.13	819.77
06/30/88	89.14	820.76	08/28/88	91.16	818.74	10/07/88	91.57	818.33	11/15/88	90.11	819.79
06/30/88	89.02	820.88	08/29/88	91.22	818.68	10/07/88	91.48	818.42	11/15/88	89.96	819.94
07/01/88	89.27	820.63	08/29/88	91.26	818.64	10/08/88	91.48	818.42	11/16/88	89.97	819.93
07/01/88	89.14	820.76	08/30/88	91.22	818.68	10/08/88	91.42	818.48	11/16/88	89.98	819.92
07/02/88	89.26	820.64	08/30/88	91.26	818.64	10/09/88	91.33	818.57	11/17/88	90.05	819.85
07/02/88	89.26	820.64	08/31/88	91.26	818.64	10/09/88	91.42	818.48	11/17/88	89.98	819.92
07/03/88	89.26	820.64	08/31/88	91.21	818.69	10/10/88	91.36	818.54	11/18/88	90.05	819.85
07/03/88	89.26	820.64	09/01/88	91.23	818.67	10/10/88	91.33	818.57	11/18/88	90.03	819.87
07/04/88	89.26	820.64	09/01/88	91.30	818.60	10/11/88	91.36	818.54	11/19/88	90.01	819.89
07/04/88	89.26	820.64	09/02/88	91.34	818.56	10/11/88	91.35	818.55	11/19/88	90.02	819.88
07/05/88	89.46	820.44	09/02/88	91.30	818.60	10/12/88	91.36	818.54	11/20/88	90.02	819.88
07/05/88	89.26	820.64	09/03/88	91.34	818.56	10/12/88	91.32	818.58	11/20/88	90.02	819.88
07/06/88	89.46	820.44	09/03/88	91.42	818.48	10/13/88	91.20	818.70	11/21/88	90.02	819.88
07/06/88	89.46	820.44	09/04/88	91.47	818.43	10/13/88	91.32	818.58	11/21/88	89.96	819.94
07/07/88	89.50	820.40	09/04/88	91.42	818.48	10/14/88	91.20	818.70	11/22/88	89.91	819.99
07/07/88	89.46	820.44	09/05/88	91.52	818.38	10/14/88	91.11	818.79	11/22/88	89.96	819.94
07/08/88	89.50	820.40	09/05/88	91.43	818.47	10/15/88	91.11	818.79	11/23/88	89.91	819.99
07/08/88	89.57	820.33	09/06/88	91.47	818.43	10/15/88	91.06	818.84	11/23/88	89.79	820.11
07/09/88	89.62	820.28	09/06/88	91.50	818.40	10/15/88	91.18	818.72	11/24/88	89.78	820.12
07/09/88	89.57	820.33	09/07/88	91.46	818.44	10/16/88	91.05	818.85	11/24/88	89.70	820.20
07/10/88	89.62	820.28	09/07/88	91.39	818.51	10/16/88	91.06	818.84	11/25/88	89.71	820.19
07/10/88	89.62	820.28	09/08/88	91.46	818.44	10/17/88	91.04	818.86	11/25/88	89.76	820.14
07/11/88	89.63	820.27	09/08/88	91.36	818.54	10/17/88	91.05	818.85	11/26/88	89.66	820.24
07/11/88	89.62	820.28	09/09/88	91.49	818.41	10/18/88	91.04	818.86	11/26/88	89.76	820.14
07/12/88	89.63	820.27	09/09/88	91.44	818.46	10/18/88	91.05	818.85	11/27/88	89.73	820.17
07/12/88	89.63	820.27	09/10/88	91.56	818.34	10/19/88	91.02	818.88	11/27/88	89.66	820.24
07/13/88	89.63	820.27	09/10/88	91.54	818.36	10/19/88	91.04	818.86	11/28/88	89.67	820.23
07/13/88	89.63	820.27	09/11/88	91.52	818.38	10/20/88	91.01	818.89	11/28/88	89.73	820.17
07/22/88	90.17	819.73	09/11/88	91.61	818.29	10/20/88	90.91	818.99	11/29/88	89.67	820.23
08/03/88	90.58	819.32	09/12/88	91.62	818.28	10/21/88	90.91	818.99	11/29/88	89.67	820.23
08/04/88	90.61	819.29	09/12/88	91.68	818.22	10/21/88	90.96	818.94	11/30/88	89.67	820.23
08/04/88	90.58	819.32	09/13/88	91.70	818.20	10/22/88	90.93	818.97	11/30/88	89.68	820.22
08/05/88	90.65	819.25	09/13/88	91.68	818.22	10/22/88	90.79	819.11	12/01/88	89.66	820.24
08/05/88	90.60	819.30	09/14/88	91.74	818.16	10/23/88	90.79	819.11	12/01/88	89.68	820.22
08/06/88	90.64	819.26	09/14/88	91.70	818.20	10/23/88	90.78	819.12	12/02/88	89.66	820.24
08/06/88	90.61	819.29	09/15/88	91.72	818.18	10/24/88	90.79	819.11	12/02/88	89.60	820.30
08/07/88	90.61	819.29	09/15/88	91.75	818.15	10/24/88	90.79	819.11	12/03/88	89.60	820.30

138-049-22BBA2 **(Continued)** MP Elev (msl,ft)=909.9

West Fargo South Aquifer SI (ft.)=245-250

Date	Depth to Water (ft)	WL Elev (msl, ft)	Date	Depth to Water (ft)	WL Elev (msl, ft)	Date	Depth to Water (ft)	WL Elev (msl, ft)	Date	Depth to Water (ft)	WL Elev (msl, ft)
12/03/88	89.74	820.16	03/16/89	88.08	821.82	04/25/89	87.65	822.25	06/03/89	87.93	821.97
12/04/88	89.74	820.16	03/17/89	88.08	821.82	04/25/89	87.69	822.21	06/03/89	87.98	821.92
12/04/88	89.65	820.25	03/17/89	88.08	821.82	04/26/89	87.69	822.21	06/04/89	87.98	821.92
12/05/88	89.64	820.26	03/18/89	88.08	821.82	04/26/89	87.71	822.19	06/04/89	87.94	821.96
12/05/88	89.54	820.36	03/18/89	88.08	821.82	04/27/89	87.71	822.19	06/05/89	87.96	821.94
12/06/88	89.50	820.40	03/19/89	88.08	821.82	04/27/89	87.72	822.18	06/05/89	87.93	821.97
12/06/88	89.56	820.34	03/19/89	88.08	821.82	04/28/89	87.68	822.22	06/06/89	87.96	821.94
12/07/88	89.63	820.27	03/20/89	88.08	821.82	04/28/89	87.71	822.19	06/06/89	87.92	821.98
12/07/88	89.56	820.34	03/20/89	88.08	821.82	04/29/89	87.71	822.19	06/07/89	87.90	822.00
12/08/88	89.65	820.25	03/21/89	88.08	821.82	04/29/89	87.68	822.22	06/07/89	87.98	821.92
12/08/88	89.64	820.26	03/21/89	88.08	821.82	04/30/89	87.72	822.18	06/08/89	88.08	821.82
12/09/88	89.59	820.31	03/22/89	88.08	821.82	04/30/89	87.75	822.15	06/08/89	87.98	821.92
12/09/88	89.65	820.25	03/22/89	88.07	821.83	05/01/89	87.75	822.15	06/09/89	88.08	821.82
12/10/88	89.61	820.29	03/23/89	87.96	821.94	05/01/89	87.75	822.15	06/09/89	88.22	821.68
12/10/88	89.63	820.27	03/23/89	88.07	821.83	05/02/89	87.70	822.20	06/10/89	88.18	821.72
12/10/88	89.60	820.30	03/24/89	87.94	821.96	05/02/89	87.75	822.15	06/10/89	88.13	821.77
12/11/88	89.53	820.37	03/24/89	87.96	821.94	05/03/89	87.75	822.15	06/11/89	88.13	821.77
12/11/88	89.60	820.30	03/25/89	87.91	821.99	05/03/89	87.68	822.22	06/11/89	88.07	821.83
12/12/88	89.52	820.38	03/25/89	87.94	821.96	05/04/89	87.59	822.31	06/12/89	88.06	821.84
12/12/88	89.38	820.52	03/26/89	87.82	822.08	05/04/89	87.69	822.21	06/12/89	88.03	821.87
12/13/88	89.40	820.50	03/26/89	87.91	821.99	05/05/89	87.61	822.29	06/13/89	88.06	821.84
12/13/88	89.27	820.63	03/27/89	87.83	822.07	05/05/89	87.73	822.17	06/13/89	88.13	821.77
12/14/88	89.46	820.44	03/27/89	87.81	822.09	05/06/89	87.75	822.15	06/14/89	88.23	821.67
12/14/88	89.30	820.60	03/28/89	87.83	822.07	05/06/89	87.69	822.21	06/14/89	88.13	821.77
12/15/88	89.55	820.35	03/28/89	87.83	822.07	05/07/89	87.72	822.18	06/15/89	88.26	821.64
12/15/88	89.47	820.43	03/29/89	87.79	822.11	05/07/89	87.64	822.26	06/15/89	88.23	821.67
12/16/88	89.46	820.44	03/29/89	87.84	822.06	05/08/89	87.67	822.23	06/16/89	88.24	821.66
12/16/88	89.40	820.50	03/30/89	87.80	822.10	05/08/89	87.61	822.29	06/16/89	88.20	821.70
12/17/88	89.43	820.47	03/30/89	87.85	822.05	05/09/89	87.72	822.18	06/17/89	88.24	821.66
12/17/88	89.37	820.53	03/31/89	87.84	822.06	05/09/89	87.68	822.22	06/17/89	88.20	821.70
12/18/88	89.35	820.55	03/31/89	87.85	822.05	05/10/89	87.71	822.19	06/18/89	88.29	821.61
12/18/88	89.22	820.68	04/01/89	87.83	822.07	05/10/89	87.72	822.18	06/18/89	88.24	821.66
12/19/88	89.22	820.68	04/01/89	87.72	822.18	05/11/89	87.70	822.20	06/19/89	88.29	821.61
12/19/88	89.14	820.76	04/02/89	87.70	822.20	05/11/89	87.68	822.22	06/19/89	88.33	821.57
12/20/88	89.26	820.64	04/02/89	87.73	822.17	05/12/89	87.67	822.23	06/20/89	88.34	821.56
12/20/88	89.15	820.75	04/03/89	87.73	822.17	05/12/89	87.69	822.21	06/20/89	88.31	821.59
12/21/88	89.24	820.66	04/03/89	87.66	822.24	05/12/89	87.78	822.12	06/21/89	88.35	821.55
12/21/88	89.27	820.63	04/04/89	87.68	822.22	05/13/89	87.68	822.22	06/21/89	88.31	821.59
12/22/88	89.08	820.82	04/04/89	87.75	822.15	05/13/89	87.70	822.20	06/22/89	88.41	821.49
12/22/88	89.24	820.66	04/05/89	87.78	822.12	05/14/89	87.74	822.16	06/22/89	88.32	821.58
12/23/88	89.15	820.75	04/05/89	87.75	822.15	05/14/89	87.70	822.20	06/23/89	88.48	821.42
12/23/88	89.08	820.82	04/06/89	87.78	822.12	05/15/89	87.76	822.14	06/23/89	88.41	821.49
12/24/88	89.15	820.75	04/06/89	87.84	822.06	05/15/89	87.73	822.17	06/24/89	88.57	821.33
12/24/88	89.22	820.68	04/07/89	87.73	822.17	05/16/89	87.73	822.17	06/24/89	88.48	821.42
12/25/88	89.23	820.67	04/07/89	87.84	822.06	05/16/89	87.70	822.20	06/25/89	88.57	821.33
12/25/88	89.27	820.63	04/08/89	87.74	822.16	05/17/89	87.68	822.22	06/25/89	88.49	821.41
12/26/88	89.28	820.62	04/08/89	87.77	822.13	05/17/89	87.76	822.14	06/26/89	88.53	821.37
12/26/88	89.06	820.84	04/09/89	87.80	822.10	05/18/89	87.69	822.21	06/26/89	88.49	821.41
			04/09/89	87.75	822.15	05/18/89	87.68	822.22	06/27/89	88.53	821.37
03/01/89	88.38	821.52	04/10/89	87.79	822.11	05/19/89	87.72	822.18	06/27/89	88.61	821.29
03/01/89	88.37	821.53	04/10/89	87.72	822.18	05/19/89	87.69	822.21	06/28/89	88.70	821.20
03/02/89	88.38	821.52	04/11/89	87.72	822.18	05/20/89	87.72	822.18	06/28/89	88.62	821.28
03/02/89	88.35	821.55	04/11/89	87.71	822.19	05/20/89	87.80	822.10	06/29/89	88.70	821.20
03/03/89	88.34	821.56	04/12/89	87.72	822.18	05/21/89	87.85	822.05	06/29/89	88.77	821.13
03/03/89	88.28	821.62	04/12/89	87.72	822.18	05/21/89	87.78	822.12	06/30/89	88.77	821.13
03/04/89	88.30	821.60	04/13/89	87.64	822.26	05/22/89	87.84	822.06	06/30/89	88.92	820.98
03/04/89	88.37	821.53	04/13/89	87.72	822.18	05/22/89	87.81	822.09	06/30/89	88.82	821.08
03/05/89	88.38	821.52	04/14/89	87.69	822.21	05/23/89	87.80	822.10	07/01/89	88.82	821.08
03/05/89	88.40	821.50	04/14/89	87.64	822.26	05/23/89	87.84	822.06	07/01/89	88.84	821.06
03/06/89	88.30	821.60	04/15/89	87.58	822.32	05/24/89	87.70	822.20	07/02/89	88.84	821.06
03/06/89	88.40	821.50	04/15/89	87.69	822.21	05/24/89	87.80	822.10	07/02/89	88.90	821.00
03/07/89	88.23	821.67	04/16/89	87.68	822.22	05/25/89	87.70	822.20	07/03/89	89.04	820.86
03/07/89	88.30	821.60	04/16/89	87.58	822.32	05/25/89	87.74	822.16	07/03/89	88.91	820.99
03/08/89	88.25	821.65	04/17/89	87.74	822.16	05/26/89	87.91	821.99	07/04/89	89.06	820.84
03/08/89	88.23	821.67	04/17/89	87.69	822.21	05/26/89	87.74	822.16	07/04/89	89.04	820.86
03/09/89	88.25	821.65	04/18/89	87.74	822.16	05/27/89	87.91	821.99	07/05/89	89.06	820.84
03/09/89	88.24	821.66	04/18/89	87.73	822.17	05/27/89	88.00	821.90	07/05/89	89.10	820.80
03/10/89	88.24	821.66	04/19/89	87.74	822.16	05/28/89	87.94	821.96	07/06/89	89.10	820.80
03/10/89	88.19	821.71	04/19/89	87.73	822.17	05/28/89	87.88	822.02	07/06/89	89.32	820.58
03/11/89	88.22	821.68	04/20/89	87.73	822.17	05/29/89	87.86	822.04	07/07/89	89.33	820.57
03/11/89	88.19	821.71	04/20/89	87.71	822.19	05/29/89	87.89	822.01	07/07/89	89.47	820.43
03/12/89	88.22	821.68	04/21/89	87.72	822.18	05/30/89	87.87	822.03	07/08/89	89.41	820.49
03/12/89	88.15	821.75	04/21/89	87.70	822.20	05/30/89	87.94	821.96	07/08/89	89.45	820.45
03/13/89	88.14	821.76	04/22/89	87.70	822.20	05/31/89	88.02	821.88	07/09/89	89.38	820.52
03/13/89	88.08	821.82	04/22/89	87.64	822.26	05/31/89	87.90	822.00	07/09/89	89.43	820.47
03/14/89	88.08	821.82	04/22/89	87.77	822.13	06/01/89	88.00	821.90	07/10/89	89.43	820.47
03/14/89	88.08	821.82	04/23/89	87.65	822.25	06/01/89	87.93	821.97	07/10/89	89.55	820.35
03/15/89	88.08	821.82	04/23/89	87.64	822.26	06/02/89	87.91	821.99	07/11/89	89.55	820.35
03/15/89	88.08	821.82	04/24/89	87.65	822.25	06/02/89	87.93	821.97	07/11/89	89.62	820.28
03/16/89	88.08	821.82	04/24/89	87.66	822.24	06/03/89	88.08	821.82	07/12/89	89.62	820.28

138-049-22BBA2 **(Continued)** MP Elev (msl,ft)=909.9

West Fargo South Aquifer SI (ft.)=245-250

Date	Depth to Water (ft)	WL Elev (msl, ft)	Date	Depth to Water (ft)	WL Elev (msl, ft)	Date	Depth to Water (ft)	WL Elev (msl, ft)	Date	Depth to Water (ft)	WL Elev (msl, ft)
07/12/89	89.71	820.19	08/21/89	91.68	818.22	09/29/89	90.73	819.17	11/07/89	89.04	820.86
07/13/89	89.87	820.03	08/21/89	91.66	818.24	09/30/89	90.58	819.32	11/08/89	89.03	820.87
07/13/89	89.72	820.18	08/22/89	91.69	818.21	09/30/89	90.72	819.18	11/08/89	89.00	820.90
07/14/89	90.00	819.90	08/22/89	91.66	818.24	09/30/89	90.72	819.18	11/09/89	88.99	820.91
07/14/89	89.89	820.01	08/23/89	91.74	818.16	10/01/89	90.61	819.29	11/09/89	88.92	820.98
07/15/89	89.96	819.94	08/23/89	91.69	818.21	10/01/89	90.49	819.41	11/10/89	88.85	821.05
07/15/89	89.94	819.96	08/24/89	91.78	818.12	10/02/89	90.68	819.22	11/10/89	88.95	820.95
07/16/89	90.02	819.88	08/24/89	91.74	818.16	10/02/89	90.62	819.28	11/11/89	88.90	821.00
07/16/89	89.96	819.94	08/25/89	91.80	818.10	10/03/89	90.70	819.20	11/11/89	88.84	821.06
07/17/89	90.03	819.87	08/25/89	91.78	818.12	10/03/89	90.68	819.22	11/12/89	88.90	821.00
07/17/89	90.01	819.89	08/26/89	91.74	818.16	10/04/89	90.68	819.22	11/12/89	88.77	821.13
07/18/89	90.01	819.89	08/26/89	91.79	818.11	10/04/89	90.53	819.37	11/13/89	88.77	821.13
07/18/89	90.11	819.79	08/27/89	91.78	818.12	10/05/89	90.52	819.38	11/13/89	88.74	821.16
07/19/89	90.21	819.69	08/27/89	91.82	818.08	10/05/89	90.44	819.46	11/14/89	88.67	821.23
07/19/89	90.12	819.78	08/28/89	91.74	818.16	10/06/89	90.52	819.38	11/14/89	88.75	821.15
07/20/89	90.26	819.64	08/28/89	91.81	818.09	10/06/89	90.46	819.44	11/15/89	88.65	821.25
07/20/89	90.20	819.70	08/29/89	91.80	818.10	10/07/89	90.53	819.37	11/15/89	88.68	821.22
07/21/89	90.35	819.55	08/29/89	91.76	818.14	10/07/89	90.48	819.42	11/16/89	88.68	821.22
07/21/89	90.26	819.64	08/30/89	91.69	818.21	10/08/89	90.48	819.42	11/16/89	88.50	821.40
07/22/89	90.33	819.57	08/30/89	91.79	818.11	10/08/89	90.44	819.46	11/17/89	88.49	821.41
07/22/89	90.46	819.44	08/31/89	91.57	818.33	10/09/89	90.37	819.53	11/17/89	88.43	821.47
07/23/89	90.63	819.27	08/31/89	91.69	818.21	10/09/89	90.44	819.46	11/18/89	88.46	821.44
07/23/89	90.46	819.44	09/01/89	91.66	818.24	10/10/89	90.37	819.53	11/18/89	88.36	821.54
07/24/89	90.66	819.24	09/01/89	91.59	818.31	10/10/89	90.25	819.65	11/19/89	88.31	821.59
07/24/89	90.56	819.34	09/02/89	91.67	818.23	10/11/89	90.25	819.65	11/19/89	88.22	821.68
07/25/89	90.73	819.17	09/02/89	91.66	818.24	10/11/89	90.20	819.70	11/19/89	88.35	821.55
07/25/89	90.60	819.30	09/03/89	91.66	818.24	10/12/89	90.24	819.66	11/20/89	88.30	821.60
07/26/89	90.78	819.12	09/03/89	91.54	818.36	10/12/89	90.27	819.63	11/20/89	88.22	821.68
07/26/89	90.68	819.22	09/04/89	91.51	818.39	10/13/89	90.24	819.66	11/21/89	88.30	821.60
07/27/89	90.74	819.16	09/04/89	91.54	818.36	10/13/89	90.26	819.64	11/21/89	88.18	821.72
07/27/89	90.72	819.18	09/05/89	91.49	818.41	10/14/89	90.21	819.69			
07/28/89	90.75	819.15	09/05/89	91.52	818.38	10/14/89	90.24	819.66	01/03/90	85.24	824.66
07/28/89	90.71	819.19	09/06/89	91.44	818.46	10/15/89	90.26	819.64	01/03/90	85.24	824.66
07/29/89	90.73	819.17	09/06/89	91.49	818.41	10/15/89	90.19	819.71	01/04/90	85.21	824.69
07/29/89	90.70	819.20	09/07/89	91.43	818.47	10/16/89	90.30	819.60	01/04/90	85.24	824.66
07/30/89	90.73	819.17	09/07/89	91.45	818.45	10/16/89	90.26	819.64	01/05/90	85.20	824.70
07/30/89	90.81	819.09	09/08/89	91.43	818.47	10/17/89	90.36	819.54	01/05/90	85.21	824.69
07/30/89	90.78	819.12	09/08/89	91.43	818.47	10/17/89	90.30	819.60	01/06/90	85.01	824.89
07/31/89	90.88	819.02	09/09/89	91.55	818.35	10/18/89	90.37	819.53	01/06/90	85.20	824.70
07/31/89	90.81	819.09	09/09/89	91.43	818.47	10/18/89	90.38	819.52	01/07/90	84.90	825.00
08/01/89	90.91	818.99	09/09/89	91.42	818.48	10/19/89	90.23	819.67	01/07/90	85.01	824.89
08/01/89	90.88	819.02	09/10/89	91.42	818.48	10/19/89	90.36	819.54	01/08/90	84.88	825.02
08/02/89	90.91	818.99	09/10/89	91.43	818.47	10/20/89	90.11	819.79	01/08/90	84.81	825.09
08/02/89	90.89	819.01	09/11/89	91.42	818.48	10/20/89	90.23	819.67	01/09/90	84.81	825.09
08/03/89	90.89	819.01	09/11/89	91.39	818.51	10/21/89	90.06	819.84	01/09/90	84.81	825.09
08/03/89	90.89	819.01	09/12/89	91.39	818.51	10/21/89	90.11	819.79	01/10/90	84.81	825.09
08/04/89	90.89	819.01	09/12/89	91.43	818.47	10/22/89	90.06	819.84	01/10/90	84.63	825.27
08/04/89	90.95	818.95	09/13/89	91.35	818.55	10/22/89	90.03	819.87	01/11/90	84.68	825.22
08/05/89	90.96	818.94	09/13/89	91.42	818.48	10/23/89	90.04	819.86	01/11/90	84.66	825.24
08/05/89	91.11	818.79	09/14/89	91.35	818.55	10/23/89	90.07	819.83	01/12/90	84.68	825.22
08/06/89	91.11	818.79	09/14/89	91.28	818.62	10/24/89	90.00	819.90	01/12/90	84.70	825.20
08/06/89	91.19	818.71	09/15/89	91.28	818.62	10/24/89	90.07	819.83	01/13/90	84.70	825.20
08/07/89	91.24	818.66	09/15/89	91.21	818.69	10/25/89	89.93	819.97	01/13/90	84.59	825.31
08/07/89	91.20	818.70	09/16/89	91.17	818.73	10/25/89	89.99	819.91	01/14/90	84.59	825.31
08/08/89	91.28	818.62	09/16/89	91.21	818.69	10/26/89	89.85	820.05	01/14/90	84.53	825.37
08/08/89	91.24	818.66	09/17/89	91.09	818.81	10/26/89	89.92	819.98	01/15/90	84.53	825.37
08/09/89	91.28	818.62	09/17/89	91.17	818.73	10/27/89	89.80	820.10	01/15/90	84.53	825.37
08/09/89	91.36	818.54	09/18/89	91.03	818.87	10/27/89	89.85	820.05	01/16/90	84.47	825.43
08/10/89	91.36	818.54	09/18/89	91.09	818.81	10/28/89	89.86	820.04	01/16/90	84.53	825.37
08/10/89	91.41	818.49	09/19/89	91.07	818.83	10/28/89	89.92	819.98	01/17/90	84.46	825.44
08/11/89	91.41	818.49	09/19/89	91.08	818.82	10/28/89	89.83	820.07	01/17/90	84.43	825.47
08/11/89	91.44	818.46	09/20/89	91.05	818.85	10/29/89	89.83	820.07	01/18/90	84.43	825.47
08/12/89	91.39	818.51	09/20/89	91.08	818.82	10/29/89	89.79	820.11	01/18/90	84.43	825.47
08/12/89	91.44	818.46	09/21/89	91.05	818.85	10/30/89	89.82	820.08	01/19/90	84.42	825.48
08/13/89	91.39	818.51	09/21/89	90.98	818.92	10/30/89	89.78	820.12	01/19/90	84.33	825.57
08/13/89	91.45	818.45	09/22/89	90.97	818.93	10/31/89	89.78	820.12	01/20/90	84.22	825.68
08/14/89	91.52	818.38	09/22/89	91.05	818.85	10/31/89	89.70	820.20	01/20/90	84.33	825.57
08/14/89	91.46	818.44	09/23/89	90.99	818.91	11/01/89	89.73	820.17	01/21/90	84.07	825.83
08/15/89	91.62	818.28	09/23/89	91.06	818.84	11/01/89	89.71	820.19	01/21/90	84.21	825.69
08/15/89	91.52	818.38	09/24/89	90.86	819.04	11/02/89	89.71	820.19	01/22/90	84.07	825.83
08/16/89	91.68	818.22	09/24/89	90.99	818.91	11/02/89	89.65	820.25	01/22/90	84.04	825.86
08/16/89	91.62	818.28	09/25/89	90.86	819.04	11/03/89	89.45	820.45	03/14/90	84.32	825.58
08/17/89	91.67	818.23	09/25/89	90.92	818.98	11/03/89	89.65	820.25	03/14/90	84.24	825.66
08/17/89	91.68	818.22	09/26/89	90.91	818.99	11/04/89	89.44	820.46	03/15/90	84.24	825.66
08/18/89	91.67	818.23	09/26/89	90.94	818.96	11/04/89	89.25	820.65	03/15/90	84.15	825.75
08/18/89	91.62	818.28	09/27/89	90.79	819.11	11/05/89	89.25	820.65	03/16/90	84.23	825.67
08/19/89	91.62	818.28	09/27/89	90.90	819.00	11/05/89	89.27	820.63	03/16/90	84.15	825.75
08/19/89	91.60	818.30	09/28/89	90.76	819.14	11/06/89	89.21	820.69	03/17/90	84.23	825.67
08/20/89	91.68	818.22	09/28/89	90.79	819.11	11/06/89	89.28	820.62	03/17/90	84.32	825.58
08/20/89	91.62	818.28	09/29/89	90.78	819.12	11/07/89	89.20	820.70	03/18/90	84.33	825.57

138-049-22BBA2 **(Continued)** MP Elev (msl,ft)=909.9

West Fargo South Aquifer SI (ft.)=245-250

Date	Depth to Water (ft)	WL Elev (msl, ft)	Date	Depth to Water (ft)	WL Elev (msl, ft)	Date	Depth to Water (ft)	WL Elev (msl, ft)	Date	Depth to Water (ft)	WL Elev (msl, ft)
03/18/90	84.45	825.45	04/27/90	85.11	824.79	06/06/90	85.54	824.36	07/16/90	86.69	823.21
03/19/90	84.45	825.45	04/28/90	85.03	824.87	06/07/90	85.66	824.24	07/16/90	86.62	823.28
03/19/90	84.48	825.42	04/28/90	84.98	824.92	06/07/90	85.66	824.24	07/17/90	86.67	823.23
03/20/90	84.44	825.46	04/29/90	85.00	824.90	06/08/90	85.66	824.24	07/17/90	86.75	823.15
03/20/90	84.46	825.44	04/29/90	85.05	824.85	06/08/90	85.64	824.26	07/18/90	86.75	823.15
03/21/90	84.43	825.47	04/30/90	85.05	824.85	06/09/90	85.79	824.11	07/18/90	86.81	823.09
03/21/90	84.45	825.45	04/30/90	85.12	824.78	06/09/90	85.65	824.25	08/03/90	87.54	822.36
03/22/90	84.44	825.46	05/01/90	85.17	824.73	06/10/90	85.78	824.12	08/15/90	88.47	821.43
03/22/90	84.61	825.29	05/01/90	85.12	824.78	06/10/90	85.77	824.13	08/15/90	88.53	821.37
03/23/90	84.61	825.29	05/02/90	85.22	824.68	06/11/90	85.69	824.21	08/16/90	88.53	821.37
03/23/90	84.66	825.24	05/02/90	85.17	824.73	06/11/90	85.76	824.14	08/16/90	88.58	821.32
03/24/90	84.60	825.30	05/04/90	85.25	824.65	06/12/90	85.69	824.21	08/17/90	88.68	821.22
03/24/90	84.66	825.24	05/04/90	85.24	824.66	06/12/90	85.70	824.20	08/17/90	88.58	821.32
03/25/90	84.57	825.33	05/05/90	85.40	824.50	06/13/90	85.72	824.18	08/18/90	88.65	821.25
03/25/90	84.67	825.23	05/05/90	85.28	824.62	06/13/90	85.70	824.20	08/18/90	88.76	821.14
03/26/90	84.66	825.24	05/05/90	85.24	824.66	06/14/90	85.72	824.18	08/19/90	88.76	821.14
03/26/90	84.70	825.20	05/06/90	85.27	824.63	06/14/90	85.87	824.03	08/19/90	88.87	821.03
03/27/90	84.62	825.28	05/06/90	85.18	824.72	06/15/90	85.84	824.06	08/20/90	88.88	821.02
03/27/90	84.66	825.24	05/07/90	85.19	824.71	06/15/90	85.87	824.03	08/20/90	88.98	820.92
03/28/90	84.66	825.24	05/07/90	85.13	824.77	06/16/90	85.80	824.10	08/21/90	88.98	820.92
03/28/90	84.62	825.28	05/08/90	85.17	824.73	06/16/90	85.84	824.06	08/21/90	89.05	820.85
03/29/90	84.66	825.24	05/08/90	85.24	824.66	06/17/90	85.78	824.12	08/22/90	89.06	820.84
03/29/90	84.64	825.26	05/09/90	85.29	824.61	06/17/90	85.80	824.10	08/22/90	89.09	820.81
03/30/90	84.62	825.28	05/09/90	85.25	824.65	06/18/90	85.95	823.95	08/23/90	89.15	820.75
03/30/90	84.64	825.26	05/10/90	85.29	824.61	06/18/90	85.78	824.12	08/23/90	89.09	820.81
03/31/90	84.62	825.28	05/10/90	85.27	824.63	06/19/90	85.90	824.00	08/24/90	89.26	820.64
03/31/90	84.61	825.29	05/11/90	85.27	824.63	06/19/90	85.79	824.11	08/24/90	89.16	820.74
04/01/90	84.74	825.16	05/11/90	85.30	824.60	06/20/90	85.80	824.10	08/25/90	89.26	820.64
04/01/90	84.61	825.29	05/12/90	85.33	824.57	06/20/90	85.79	824.11	08/25/90	89.30	820.60
04/02/90	84.79	825.11	05/12/90	85.30	824.60	06/21/90	85.80	824.10	08/26/90	89.35	820.55
04/02/90	84.74	825.16	05/13/90	85.28	824.62	06/21/90	85.86	824.04	08/26/90	89.27	820.63
04/03/90	84.79	825.11	05/13/90	85.33	824.57	06/22/90	85.90	824.00	08/27/90	89.36	820.54
04/03/90	84.72	825.18	05/14/90	85.33	824.57	06/22/90	85.85	824.05	08/27/90	89.42	820.48
04/04/90	84.73	825.17	05/14/90	85.28	824.62	06/23/90	85.90	824.00	08/28/90	89.43	820.47
04/04/90	84.79	825.11	05/15/90	85.33	824.57	06/23/90	85.95	823.95	08/28/90	89.49	820.41
04/05/90	84.81	825.09	05/15/90	85.33	824.57	06/24/90	85.94	823.96	08/29/90	89.49	820.41
04/05/90	84.79	825.11	05/16/90	85.29	824.61	06/24/90	85.95	823.95	08/29/90	89.54	820.36
04/06/90	84.85	825.05	05/16/90	85.32	824.58	06/25/90	85.95	823.95	08/30/90	89.54	820.36
04/06/90	84.81	825.09	05/17/90	85.39	824.51	06/25/90	85.97	823.93	08/30/90	89.57	820.33
04/07/90	84.84	825.06	05/17/90	85.31	824.59	06/26/90	86.05	823.85	08/31/90	89.57	820.33
04/07/90	84.85	825.05	05/18/90	85.44	824.46	06/26/90	85.97	823.93	08/31/90	89.66	820.24
04/08/90	84.85	825.05	05/18/90	85.39	824.51	06/27/90	86.03	823.87	09/01/90	89.67	820.23
04/08/90	84.81	825.09	05/19/90	85.40	824.50	06/27/90	85.94	823.96	09/01/90	89.73	820.17
04/09/90	84.91	824.99	05/19/90	85.46	824.44	06/28/90	85.93	823.97	09/01/90	89.77	820.13
04/09/90	84.81	825.09	05/20/90	85.45	824.45	06/28/90	85.95	823.95	09/02/90	89.83	820.07
04/10/90	84.98	824.92	05/20/90	85.50	824.40	06/29/90	86.04	823.86	09/02/90	89.78	820.12
04/10/90	84.91	824.99	05/21/90	85.50	824.40	06/29/90	86.14	823.76	09/03/90	89.84	820.06
04/11/90	84.99	824.91	05/21/90	85.57	824.33	06/29/90	85.95	823.95	09/03/90	89.83	820.07
04/11/90	84.97	824.93	05/22/90	85.58	824.32	06/30/90	86.04	823.86	09/04/90	89.84	820.06
04/12/90	84.94	824.96	05/22/90	85.50	824.40	06/30/90	86.11	823.79	09/04/90	89.99	819.91
04/12/90	84.97	824.93	05/23/90	85.57	824.33	07/01/90	86.14	823.76	09/05/90	89.98	819.92
04/13/90	84.94	824.96	05/23/90	85.50	824.40	07/01/90	86.09	823.81	09/05/90	89.94	819.96
04/13/90	84.94	824.96	05/24/90	85.60	824.30	07/02/90	86.08	823.82	09/06/90	89.99	819.91
04/14/90	84.90	825.00	05/24/90	85.55	824.35	07/02/90	86.12	823.78	09/06/90	89.94	819.96
04/14/90	84.95	824.95	05/25/90	85.56	824.34	07/03/90	86.11	823.79	09/07/90	89.99	819.91
04/15/90	84.95	824.95	05/25/90	85.63	824.27	07/03/90	86.05	823.85	09/07/90	90.06	819.84
04/15/90	84.93	824.97	05/26/90	85.58	824.32	07/04/90	86.23	823.67	09/08/90	90.09	819.81
04/16/90	85.03	824.87	05/26/90	85.59	824.31	07/04/90	86.11	823.79	09/08/90	90.06	819.84
04/16/90	84.94	824.96	05/27/90	85.58	824.32	07/05/90	86.24	823.66	09/09/90	90.10	819.80
04/17/90	85.06	824.84	05/27/90	85.62	824.28	07/05/90	86.31	823.59	09/09/90	90.17	819.73
04/17/90	85.03	824.87	05/28/90	85.69	824.21	07/06/90	86.29	823.61	09/10/90	90.18	819.72
04/18/90	85.00	824.90	05/28/90	85.79	824.11	07/06/90	86.32	823.58	09/10/90	90.25	819.65
04/18/90	85.06	824.84	05/28/90	85.62	824.28	07/07/90	86.28	823.62	09/11/90	90.26	819.64
04/19/90	84.97	824.93	05/29/90	85.67	824.23	07/07/90	86.30	823.60	09/11/90	90.23	819.67
04/19/90	85.00	824.90	05/29/90	85.71	824.19	07/08/90	86.30	823.60	09/12/90	90.25	819.65
04/20/90	85.05	824.85	05/30/90	85.70	824.20	07/08/90	86.43	823.47	09/12/90	90.29	819.61
04/20/90	84.99	824.91	05/30/90	85.69	824.21	07/09/90	86.43	823.47	09/13/90	90.27	819.63
04/21/90	85.06	824.84	05/31/90	85.66	824.24	07/09/90	86.48	823.42	09/13/90	90.34	819.56
04/21/90	85.04	824.86	05/31/90	85.70	824.20	07/10/90	86.48	823.42	09/14/90	90.39	819.51
04/22/90	85.04	824.86	06/01/90	85.47	824.43	07/10/90	86.52	823.38	09/14/90	90.34	819.56
04/22/90	84.96	824.94	06/01/90	85.66	824.24	07/11/90	86.52	823.38	09/15/90	90.43	819.47
04/23/90	84.97	824.93	06/02/90	85.42	824.48	07/11/90	86.56	823.34	09/15/90	90.36	819.54
04/23/90	84.93	824.97	06/02/90	85.46	824.44	07/12/90	86.65	823.25	09/16/90	90.44	819.46
04/24/90	84.97	824.93	06/03/90	85.58	824.32	07/12/90	86.57	823.33	09/16/90	90.49	819.41
04/24/90	84.99	824.91	06/03/90	85.46	824.44	07/13/90	86.70	823.20	09/17/90	90.51	819.39
04/25/90	85.01	824.89	06/04/90	85.61	824.29	07/13/90	86.65	823.25	09/17/90	90.49	819.41
04/25/90	84.97	824.93	06/04/90	85.57	824.33	07/14/90	86.62	823.28	09/18/90	90.46	819.44
04/26/90	85.12	824.78	06/05/90	85.52	824.38	07/14/90	86.67	823.23	09/18/90	90.50	819.40
04/26/90	85.01	824.89	06/05/90	85.57	824.33	07/15/90	86.61	823.29	09/19/90	90.48	819.42
04/27/90	85.04	824.86	06/06/90	85.66	824.24	07/15/90	86.62	823.28	09/19/90	90.46	819.44

138-049-22BBA2 (Continued) MP Elev (msl,ft)=909.9

West Fargo South Aquifer SI (ft.)=245-250

Date	Depth to Water (ft)	WL Elev (msl, ft)
09/20/90	90.47	819.43
09/20/90	90.49	819.41
09/21/90	90.50	819.40
09/21/90	90.48	819.42
09/22/90	90.60	819.30
09/22/90	90.50	819.40
09/23/90	90.55	819.35
09/23/90	90.61	819.29
09/24/90	90.44	819.46
09/24/90	90.55	819.35
09/25/90	90.44	819.46
09/25/90	90.48	819.42
09/26/90	90.50	819.40
09/26/90	90.47	819.43
09/27/90	90.58	819.32
09/27/90	90.51	819.39
09/28/90	90.63	819.27
09/28/90	90.58	819.32
09/29/90	90.65	819.25
09/29/90	90.63	819.27
09/29/90	90.69	819.21
09/30/90	90.64	819.26
09/30/90	90.54	819.36
10/01/90	90.55	819.35
10/01/90	90.57	819.33
10/02/90	90.41	819.49
10/02/90	90.55	819.35
10/03/90	90.39	819.51
10/03/90	90.41	819.49
10/04/90	90.40	819.50
10/04/90	90.43	819.47
10/05/90	90.43	819.47
10/05/90	90.35	819.55
10/06/90	90.52	819.38
10/06/90	90.40	819.50
10/07/90	90.57	819.33
10/07/90	90.52	819.38
10/08/90	90.58	819.32
10/08/90	90.59	819.31
10/09/90	90.59	819.31
10/09/90	90.55	819.35
10/10/90	90.42	819.48
10/10/90	90.54	819.36
10/11/90	90.45	819.45
10/11/90	90.42	819.48
10/12/90	90.45	819.45
10/12/90	90.38	819.52
10/13/90	90.37	819.53
10/13/90	90.30	819.60
10/14/90	90.28	819.62
10/14/90	90.31	819.59
10/15/90	90.34	819.56
10/15/90	90.32	819.58
10/16/90	90.27	819.63
10/16/90	90.34	819.56
10/17/90	90.26	819.64
10/17/90	90.21	819.69
10/18/90	90.27	819.63
10/18/90	90.26	819.64
10/19/90	90.14	819.76
10/19/90	90.26	819.64
10/20/90	90.18	819.72
10/20/90	90.14	819.76
10/21/90	90.19	819.71
10/21/90	90.17	819.73
10/22/90	90.16	819.74
10/22/90	90.09	819.81
10/23/90	90.11	819.79
10/23/90	90.16	819.74
10/24/90	90.16	819.74
10/24/90	90.18	819.72
10/25/90	90.18	819.72
10/25/90	90.08	819.82
10/27/90	90.15	819.75
11/10/90	89.59	820.31
11/10/90	89.59	820.31
11/11/90	89.59	820.31
11/11/90	89.59	820.31
11/12/90	89.59	820.31
11/12/90	89.59	820.31
11/13/90	89.59	820.31
11/13/90	89.55	820.35
11/14/90	89.54	820.36
11/14/90	89.43	820.47
11/15/90	89.43	820.47
11/15/90	89.43	820.47
11/16/90	89.43	820.47
11/16/90	89.43	820.47
11/17/90	89.43	820.47
11/17/90	89.33	820.57
11/17/90	89.33	820.57
11/18/90	89.33	820.57
11/18/90	89.33	820.57
11/19/90	89.33	820.57
11/19/90	89.33	820.57
11/20/90	89.10	820.80
11/20/90	89.33	820.57
11/21/90	89.09	820.81
11/21/90	89.01	820.89
11/22/90	89.01	820.89
11/22/90	89.00	820.90
11/23/90	89.00	820.90
11/23/90	89.00	820.90
11/24/90	89.00	820.90
11/24/90	88.92	820.98
11/25/90	88.92	820.98
11/25/90	88.92	820.98
11/26/90	88.92	820.98
11/26/90	88.92	820.98
11/27/90	88.92	820.98
11/27/90	88.91	820.99
11/28/90	88.91	820.99
11/28/90	88.91	820.99
11/29/90	88.91	820.99
11/29/90	88.91	820.99
11/30/90	88.79	821.11
11/30/90	88.90	821.00
12/01/90	88.81	821.09
12/01/90	88.79	821.11
12/02/90	88.81	821.09
12/02/90	88.81	821.09
12/03/90	88.82	821.08
12/03/90	88.81	821.09
12/04/90	88.82	821.08
12/04/90	88.76	821.14
12/05/90	88.76	821.14
12/05/90	88.68	821.22
12/06/90	88.68	821.22
12/06/90	88.68	821.22
12/07/90	88.65	821.25
12/07/90	88.68	821.22
12/08/90	88.65	821.25
12/12/90	88.51	821.39
12/12/90	88.59	821.31
12/13/90	88.66	821.24
12/13/90	88.53	821.37
12/14/90	88.58	821.32
12/14/90	88.49	821.41
12/15/90	88.42	821.48
12/15/90	88.56	821.34
12/16/90	88.50	821.40
12/16/90	88.40	821.50
12/17/90	88.36	821.54
12/17/90	88.47	821.43
12/18/90	88.30	821.60
12/18/90	88.37	821.53
12/19/90	88.41	821.49
12/19/90	88.30	821.60
12/20/90	88.41	821.49
12/20/90	88.31	821.59
12/21/90	88.40	821.50
12/21/90	88.31	821.59
12/22/90	88.37	821.53
12/22/90	88.24	821.66
12/23/90	88.29	821.61
12/23/90	88.21	821.69
12/24/90	88.23	821.67
12/24/90	88.13	821.77
12/25/90	88.27	821.63
12/25/90	88.16	821.74
12/26/90	88.29	821.61
12/26/90	88.17	821.73
12/27/90	88.12	821.78
12/27/90	88.11	821.79
12/28/90	88.00	821.90
12/28/90	88.11	821.79
12/29/90	88.06	821.84
12/29/90	88.16	821.74
12/30/90	88.15	821.75
12/30/90	88.06	821.84
12/31/90	87.98	821.92
12/31/90	88.09	821.81
01/01/91	88.07	821.83
01/01/91	88.00	821.90
01/02/91	88.16	821.74
01/02/91	88.00	821.90
01/03/91	88.00	821.90
01/03/91	88.13	821.77
01/04/91	87.97	821.93
01/04/91	88.06	821.84
01/05/91	87.92	821.98
01/05/91	88.04	821.86
01/06/91	88.09	821.81
01/06/91	87.96	821.94
01/07/91	88.02	821.88
01/07/91	87.96	821.94
01/08/91	88.00	821.90
01/08/91	87.87	822.03
01/09/91	88.03	821.87
01/09/91	87.89	822.01
01/10/91	87.97	821.93
01/10/91	87.88	822.02
01/11/91	87.94	821.96
01/11/91	87.81	822.09
01/12/91	87.81	822.09
01/12/91	87.77	822.13
01/13/91	87.71	822.19
01/13/91	87.64	822.26
01/14/91	87.59	822.31
01/14/91	87.73	822.17
01/15/91	87.73	822.17
01/15/91	87.59	822.31
01/16/91	87.73	822.17
01/16/91	87.58	822.32
01/17/91	87.73	822.17
01/17/91	87.58	822.32
01/18/91	87.55	822.35
01/18/91	87.57	822.33
01/19/91	87.55	822.35
01/19/91	87.51	822.39
01/20/91	87.67	822.23
01/20/91	87.60	822.30
01/21/91	87.57	822.33
01/21/91	87.61	822.29
01/22/91	87.46	822.44
01/22/91	87.40	822.50
01/23/91	87.51	822.39
01/23/91	87.50	822.40
01/24/91	87.66	822.24
01/24/91	87.58	822.32
01/25/91	87.65	822.25
01/25/91	87.58	822.32
01/26/91	87.48	822.42
01/26/91	87.46	822.44
01/27/91	87.41	822.49
01/27/91	87.31	822.59
01/28/91	87.46	822.44
01/28/91	87.43	822.47
01/29/91	87.46	822.44
01/29/91	87.55	822.35
01/30/91	87.42	822.48
01/30/91	87.49	822.41
01/31/91	87.43	822.47
01/31/91	87.57	822.33
02/01/91	87.43	822.47
02/01/91	87.55	822.35
02/02/91	87.40	822.50
02/02/91	87.50	822.40
02/03/91	87.34	822.56
02/03/91	87.48	822.42
02/04/91	87.41	822.49
02/04/91	87.48	822.42
02/05/91	87.42	822.48
02/05/91	87.57	822.33
02/06/91	87.54	822.36
02/06/91	87.58	822.32
02/07/91	87.62	822.28
02/07/91	87.54	822.36
02/08/91	87.58	822.32
02/08/91	87.47	822.43
02/09/91	87.54	822.36
02/09/91	87.63	822.27
02/10/91	87.57	822.33
02/10/91	87.70	822.20
02/11/91	87.70	822.20
02/11/91	87.57	822.33
02/12/91	87.54	822.36
02/12/91	87.53	822.37
02/13/91	87.37	822.53
02/13/91	87.46	822.44
02/14/91	87.54	822.36
02/14/91	87.53	822.37
02/15/91	87.56	822.34
02/15/91	87.59	822.31
02/16/91	87.41	822.49
02/16/91	87.50	822.40
02/17/91	87.54	822.36
02/17/91	87.43	822.47
02/18/91	87.44	822.46
02/18/91	87.58	822.32
02/19/91	87.55	822.35
02/19/91	87.45	822.45
02/20/91	87.51	822.39
02/20/91	87.38	822.52
02/21/91	87.53	822.37
02/21/91	87.52	822.38
02/22/91	87.70	822.20
02/22/91	87.59	822.31
02/23/91	87.65	822.25
02/23/91	87.59	822.31
02/24/91	87.70	822.20
02/24/91	87.61	822.29
02/25/91	87.74	822.16
02/25/91	87.61	822.29
02/26/91	87.67	822.23
02/26/91	87.58	822.32
02/27/91	87.61	822.29
02/27/91	87.51	822.39
02/28/91	87.44	822.46
02/28/91	87.51	822.39
03/01/91	87.51	822.39
03/01/91	87.45	822.45
03/02/91	87.55	822.35
03/02/91	87.62	822.28
03/03/91	87.61	822.29
03/03/91	87.55	822.35
03/04/91	87.44	822.46
03/04/91	87.49	822.41
03/05/91	87.37	822.53
03/05/91	87.34	822.56
03/06/91	87.51	822.39
03/06/91	87.50	822.40
03/07/91	87.50	822.40
03/07/91	87.61	822.29
03/08/91	87.56	822.34
03/08/91	87.58	822.32
03/09/91	87.57	822.33
03/09/91	87.72	822.18
03/10/91	87.70	822.20
03/10/91	87.57	822.33
03/11/91	87.67	822.23
03/11/91	87.54	822.36
03/12/91	87.68	822.22
03/12/91	87.57	822.33
03/13/91	87.73	822.17
03/13/91	87.61	822.29
03/14/91	87.77	822.13
03/14/91	87.63	822.27
03/15/91	87.63	822.27

138-049-22BBA2 **(Continued)** MP Elev (msl,ft)=909.9

West Fargo South Aquifer SI (ft.)=245-250

Date	Depth to Water (ft)	WL Elev (msl, ft)	Date	Depth to Water (ft)	WL Elev (msl, ft)	Date	Depth to Water (ft)	WL Elev (msl, ft)	Date	Depth to Water (ft)	WL Elev (msl, ft)
03/15/91	87.79	822.11	04/24/91	87.37	822.53	06/03/91	87.71	822.19	07/13/91	88.31	821.59
03/16/91	87.63	822.27	04/24/91	87.44	822.46	06/03/91	87.84	822.06	07/13/91	88.42	821.48
03/16/91	87.78	822.12	04/25/91	87.43	822.47	06/04/91	87.87	822.03	07/13/91	88.43	821.47
03/17/91	87.63	822.27	04/25/91	87.32	822.58	06/04/91	87.76	822.14	07/14/91	88.45	821.45
03/17/91	87.75	822.15	04/26/91	87.32	822.58	06/05/91	87.82	822.08	07/14/91	88.31	821.59
03/18/91	87.72	822.18	04/26/91	87.28	822.62	06/05/91	87.92	821.98	07/15/91	88.43	821.47
03/18/91	87.59	822.31	04/27/91	87.22	822.68	06/06/91	87.98	821.92	07/15/91	88.29	821.61
03/19/91	87.68	822.22	04/27/91	87.13	822.77	06/06/91	87.85	822.05	07/16/91	88.43	821.47
03/19/91	87.56	822.34	04/28/91	87.27	822.63	06/07/91	87.94	821.96	07/16/91	88.27	821.63
03/20/91	87.56	822.34	04/28/91	87.17	822.73	06/07/91	88.01	821.89	07/17/91	88.27	821.63
03/20/91	87.51	822.39	04/29/91	87.17	822.73	06/08/91	88.06	821.84	07/17/91	88.40	821.50
03/21/91	87.56	822.34	04/29/91	87.22	822.68	06/08/91	87.94	821.96	07/18/91	88.37	821.53
03/21/91	87.44	822.46	04/30/91	87.06	822.84	06/09/91	88.03	821.87	07/18/91	88.24	821.66
03/22/91	87.55	822.35	04/30/91	87.17	822.73	06/09/91	87.89	822.01	07/19/91	88.37	821.53
03/22/91	87.44	822.46	05/01/91	87.13	822.77	06/10/91	88.04	821.86	07/19/91	88.23	821.67
03/23/91	87.51	822.39	05/01/91	87.22	822.68	06/10/91	87.96	821.94	07/20/91	88.39	821.51
03/23/91	87.39	822.51	05/02/91	87.21	822.69	06/11/91	88.10	821.80	07/20/91	88.28	821.62
03/24/91	87.55	822.35	05/02/91	87.30	822.60	06/11/91	87.95	821.95	07/21/91	88.44	821.46
03/24/91	87.46	822.44	05/03/91	87.29	822.61	06/12/91	88.10	821.80	07/21/91	88.30	821.60
03/25/91	87.54	822.36	05/03/91	87.21	822.69	06/12/91	87.95	821.95	07/22/91	88.42	821.48
03/25/91	87.46	822.44	05/04/91	87.17	822.73	06/13/91	88.08	821.82	07/22/91	88.33	821.57
03/26/91	87.44	822.46	05/04/91	87.28	822.62	06/13/91	87.96	821.94	07/23/91	88.49	821.41
03/26/91	87.37	822.53	05/05/91	87.17	822.73	06/14/91	88.07	821.83	07/23/91	88.38	821.52
03/27/91	87.33	822.57	05/05/91	87.33	822.57	06/14/91	87.93	821.97	07/24/91	88.40	821.50
03/27/91	87.46	822.44	05/06/91	87.17	822.73	06/15/91	87.96	821.94	07/24/91	88.53	821.37
03/28/91	87.43	822.47	05/06/91	87.32	822.58	06/15/91	88.05	821.85	07/25/91	88.56	821.34
03/28/91	87.49	822.41	05/08/91	87.23	822.67	06/16/91	88.12	821.78	07/25/91	88.46	821.44
03/29/91	87.57	822.33	05/08/91	87.38	822.52	06/16/91	88.00	821.90	07/26/91	88.62	821.28
03/29/91	87.59	822.31	05/09/91	87.32	822.58	06/17/91	88.10	821.80	07/26/91	88.46	821.44
03/29/91	87.52	822.38	05/09/91	87.21	822.69	06/17/91	88.16	821.74	07/27/91	88.62	821.28
03/30/91	87.50	822.40	05/10/91	87.36	822.54	06/18/91	88.18	821.72	07/27/91	88.47	821.43
03/30/91	87.56	822.34	05/10/91	87.32	822.58	06/18/91	88.24	821.66	07/28/91	88.63	821.27
03/31/91	87.57	822.33	05/10/91	87.25	822.65	06/19/91	88.22	821.68	07/28/91	88.48	821.42
03/31/91	87.49	822.41	05/11/91	87.35	822.55	06/19/91	88.34	821.56	07/29/91	88.64	821.26
04/01/91	87.54	822.36	05/11/91	87.25	822.65	06/20/91	88.32	821.58	07/29/91	88.54	821.36
04/01/91	87.66	822.24	05/12/91	87.27	822.63	06/20/91	88.22	821.68	07/30/91	88.53	821.37
04/02/91	87.52	822.38	05/12/91	87.22	822.68	06/21/91	88.23	821.67	07/30/91	88.66	821.24
04/02/91	87.61	822.29	05/13/91	87.27	822.63	06/21/91	88.33	821.57	07/31/91	88.67	821.23
04/03/91	87.45	822.45	05/13/91	87.18	822.72	06/22/91	88.28	821.62	07/31/91	88.55	821.35
04/03/91	87.59	822.31	05/14/91	87.32	822.58	06/22/91	88.39	821.51	08/01/91	88.71	821.19
04/04/91	87.43	822.47	05/14/91	87.23	822.67	06/23/91	88.44	821.46	08/01/91	88.61	821.29
04/04/91	87.57	822.33	05/15/91	87.32	822.58	06/23/91	88.30	821.60	08/02/91	88.75	821.15
04/05/91	87.51	822.39	05/15/91	87.18	822.72	06/24/91	88.31	821.59	08/02/91	88.60	821.30
04/05/91	87.40	822.50	05/16/91	87.34	822.56	06/24/91	88.46	821.44	08/03/91	88.74	821.16
04/06/91	87.45	822.45	05/16/91	87.22	822.68	06/25/91	88.40	821.50	08/03/91	88.66	821.24
04/06/91	87.34	822.56	05/17/91	87.32	822.58	06/25/91	88.31	821.59	08/04/91	88.71	821.19
04/07/91	87.36	822.54	05/17/91	87.38	822.52	06/26/91	88.24	821.66	08/04/91	88.83	821.07
04/07/91	87.45	822.45	05/18/91	87.46	822.44	06/26/91	88.38	821.52	08/05/91	88.75	821.15
04/08/91	87.42	822.48	05/18/91	87.48	822.42	06/27/91	88.32	821.58	08/05/91	88.87	821.03
04/08/91	87.52	822.38	05/19/91	87.42	822.48	06/27/91	88.39	821.51	08/06/91	88.91	820.99
04/09/91	87.58	822.32	05/19/91	87.57	822.33	06/28/91	88.36	821.54	08/06/91	88.85	821.05
04/09/91	87.45	822.45	05/20/91	87.55	822.35	06/28/91	88.41	821.49	08/07/91	88.92	820.98
04/10/91	87.60	822.30	05/20/91	87.41	822.49	06/29/91	88.41	821.49	08/07/91	89.01	820.89
04/10/91	87.46	822.44	05/21/91	87.52	822.38	06/29/91	88.29	821.61	08/08/91	89.02	820.88
04/11/91	87.63	822.27	05/21/91	87.39	822.51	06/30/91	88.29	821.61	08/08/91	89.08	820.82
04/11/91	87.57	822.33	05/22/91	87.39	822.51	06/30/91	88.28	821.62	08/09/91	89.08	820.82
04/12/91	87.71	822.19	05/22/91	87.52	822.38	07/01/91	88.15	821.75	08/09/91	89.19	820.71
04/12/91	87.57	822.33	05/23/91	87.43	822.47	07/01/91	88.28	821.62	08/10/91	89.24	820.66
04/13/91	87.58	822.32	05/23/91	87.52	822.38	07/02/91	88.31	821.59	08/10/91	89.18	820.72
04/13/91	87.55	822.35	05/24/91	87.56	822.34	07/02/91	88.17	821.73	08/10/91	89.15	820.75
04/14/91	87.49	822.41	05/24/91	87.58	822.32	07/03/91	88.33	821.57	08/11/91	89.31	820.59
04/14/91	87.42	822.48	05/25/91	87.55	822.35	07/03/91	88.22	821.68	08/11/91	89.23	820.67
04/15/91	87.33	822.57	05/25/91	87.68	822.22	07/04/91	88.22	821.68	08/12/91	89.35	820.55
04/15/91	87.47	822.43	05/26/91	87.52	822.38	07/04/91	88.38	821.52	08/12/91	89.40	820.50
04/16/91	87.49	822.41	05/26/91	87.61	822.29	07/05/91	88.22	821.68	08/13/91	89.34	820.56
04/16/91	87.39	822.51	05/27/91	87.61	822.29	07/05/91	88.35	821.55	08/13/91	89.50	820.40
04/17/91	87.43	822.47	05/27/91	87.56	822.34	07/06/91	88.35	821.55	08/14/91	89.34	820.56
04/17/91	87.56	822.34	05/28/91	87.58	822.32	07/06/91	88.21	821.69	08/14/91	89.50	820.40
04/18/91	87.45	822.45	05/28/91	87.72	822.18	07/07/91	88.37	821.53	08/15/91	89.50	820.40
04/18/91	87.58	822.32	05/29/91	87.58	822.32	07/07/91	88.28	821.62	08/15/91	89.37	820.53
04/19/91	87.47	822.43	05/29/91	87.72	822.18	07/08/91	88.32	821.58	08/16/91	89.53	820.37
04/19/91	87.60	822.30	05/30/91	87.57	822.33	07/08/91	88.44	821.46	08/16/91	89.42	820.48
04/20/91	87.61	822.29	05/30/91	87.66	822.24	07/09/91	88.32	821.58	08/17/91	89.58	820.32
04/20/91	87.47	822.43	05/31/91	87.66	822.24	07/09/91	88.45	821.45	08/17/91	89.51	820.39
04/21/91	87.45	822.45	05/31/91	87.57	822.33	07/10/91	88.29	821.61	08/18/91	89.67	820.23
04/21/91	87.49	822.41	06/01/91	87.63	822.27	07/10/91	88.45	821.45	08/18/91	89.62	820.28
04/22/91	87.36	822.54	06/01/91	87.73	822.17	07/11/91	88.29	821.61	08/19/91	89.79	820.11
04/22/91	87.47	822.43	06/01/91	87.64	822.26	07/11/91	88.40	821.50	08/19/91	89.72	820.18
04/23/91	87.45	822.45	06/02/91	87.80	822.10	07/12/91	88.26	821.64	08/20/91	89.85	820.05
04/23/91	87.36	822.54	06/02/91	87.68	822.22	07/12/91	88.40	821.50	08/20/91	89.71	820.19

138-049-22BBA2 **(Continued)** MP Elev (msl,ft)=909.9

West Fargo South Aquifer SI (ft.)=245-250

Date	Depth to Water (ft)	WL Elev (msl, ft)
08/21/91	89.68	820.22
08/21/91	89.74	820.16
08/22/91	89.74	820.16
08/22/91	89.68	820.22
08/23/91	89.79	820.11
08/23/91	89.75	820.15
08/24/91	89.80	820.10
08/24/91	89.72	820.18
08/25/91	89.73	820.17
08/25/91	89.71	820.19
08/26/91	89.75	820.15
08/26/91	89.73	820.17
08/27/91	89.76	820.14
08/27/91	89.82	820.08
08/28/91	89.86	820.04
08/28/91	89.83	820.07
08/29/91	89.87	820.03
08/29/91	89.96	819.94
08/30/91	90.08	819.82
08/30/91	89.97	819.93
08/31/91	90.18	819.72
08/31/91	90.07	819.83
08/31/91	90.09	819.81
09/01/91	90.09	819.81
09/01/91	90.11	819.79
09/02/91	90.01	819.89
09/02/91	90.08	819.82
09/03/91	90.03	819.87
09/03/91	90.13	819.77
09/04/91	90.13	819.77
09/04/91	90.16	819.74
09/05/91	90.17	819.73
09/05/91	90.12	819.78
09/06/91	90.17	819.73
09/06/91	90.19	819.71
09/07/91	90.17	819.73
09/07/91	90.16	819.74
09/08/91	90.16	819.74
09/08/91	90.06	819.84
09/09/91	90.06	819.84
09/09/91	90.17	819.73
09/10/91	90.17	819.73
09/10/91	90.21	819.69
09/11/91	90.18	819.72
09/11/91	90.21	819.69
09/12/91	90.18	819.72
09/12/91	90.17	819.73
09/13/91	90.14	819.76
09/13/91	90.17	819.73
09/14/91	90.13	819.77
09/14/91	90.08	819.82
09/15/91	90.08	819.82
09/15/91	90.09	819.81
09/16/91	90.08	819.82
09/16/91	90.14	819.76
09/17/91	90.14	819.76
09/17/91	90.16	819.74
09/18/91	90.26	819.64
09/18/91	90.16	819.74
09/19/91	90.31	819.59
09/19/91	90.26	819.64
09/20/91	90.30	819.60
09/20/91	90.22	819.68
09/21/91	90.13	819.77
09/21/91	90.21	819.69
09/22/91	90.12	819.78
09/22/91	90.25	819.65
09/23/91	90.25	819.65
09/23/91	90.29	819.61
09/24/91	90.30	819.60
09/24/91	90.20	819.70
09/25/91	90.19	819.71
09/25/91	90.26	819.64
09/26/91	90.28	819.62
09/26/91	90.26	819.64
09/27/91	90.32	819.58
09/27/91	90.29	819.61
09/28/91	90.34	819.56
09/28/91	90.33	819.57
09/28/91	90.45	819.45
09/29/91	90.31	819.59
09/29/91	90.34	819.56
09/30/91	90.38	819.52
09/30/91	90.33	819.57
10/01/91	90.43	819.47
10/01/91	90.36	819.54
10/02/91	90.40	819.50
10/02/91	90.36	819.54
10/03/91	90.40	819.50
10/03/91	90.46	819.44
10/04/91	90.46	819.44
10/04/91	90.52	819.38
10/05/91	90.57	819.33
10/05/91	90.52	819.38
10/06/91	90.57	819.33
10/06/91	90.62	819.28
10/07/91	90.61	819.29
10/07/91	90.51	819.39
10/08/91	90.63	819.27
10/08/91	90.49	819.41
10/09/91	90.63	819.27
10/09/91	90.72	819.18
10/10/91	90.73	819.17
10/10/91	90.65	819.25
10/11/91	90.64	819.26
10/11/91	90.72	819.18
10/12/91	90.72	819.18
10/12/91	90.75	819.15
10/13/91	90.73	819.17
10/13/91	90.67	819.23
10/14/91	90.69	819.21
10/14/91	90.74	819.16
10/15/91	90.72	819.18
10/15/91	90.76	819.14
10/16/91	90.62	819.28
10/16/91	90.72	819.18
10/17/91	90.57	819.33
10/17/91	90.85	819.05
10/18/91	90.96	818.94
10/18/91	90.85	819.05
10/19/91	90.95	818.95
10/19/91	90.96	818.94
10/20/91	90.95	818.95
10/20/91	91.08	818.82
10/20/91	90.86	819.04
10/21/91	90.86	819.04
10/21/91	90.87	819.03
10/22/91	90.81	819.09
10/22/91	90.90	819.00
10/23/91	90.90	819.00
10/23/91	90.94	818.96
10/24/91	90.97	818.93
10/24/91	90.94	818.96
10/25/91	91.00	818.90
10/25/91	90.97	818.93
10/26/91	90.99	818.91
10/26/91	91.03	818.87
10/27/91	91.00	818.90
10/27/91	91.03	818.87
10/28/91	90.92	818.98
10/28/91	91.01	818.89
10/29/91	91.06	818.84
10/29/91	90.93	818.97
10/30/91	91.16	818.74
10/30/91	91.06	818.84
10/31/91	91.13	818.77
10/31/91	91.16	818.74
11/01/91	91.13	818.77
11/01/91	91.06	818.84
11/02/91	91.10	818.80
11/02/91	91.05	818.85
11/03/91	91.16	818.74
11/03/91	91.10	818.80
11/04/91	91.16	818.74
11/04/91	91.10	818.80
11/05/91	91.04	818.86
11/05/91	91.10	818.80
11/06/91	91.20	818.70
11/06/91	91.09	818.81
11/07/91	91.20	818.70
11/07/91	91.21	818.69
11/08/91	91.21	818.69
11/08/91	91.13	818.77
11/09/91	91.18	818.72
11/09/91	91.11	818.79
11/10/91	91.21	818.69
11/10/91	91.18	818.72
11/11/91	91.19	818.71
11/11/91	91.20	818.70
11/12/91	91.19	818.71
11/17/91	91.50	818.40
12/20/91	91.61	818.29
04/17/92	91.10	818.80
05/03/92	91.14	818.76
05/04/92	91.17	818.73
05/04/92	91.14	818.76
05/05/92	91.23	818.67
05/05/92	91.17	818.73
05/06/92	91.22	818.68
05/06/92	91.24	818.66
05/07/92	91.23	818.67
05/07/92	91.20	818.70
05/08/92	91.25	818.65
05/08/92	91.20	818.70
05/09/92	91.21	818.69
05/09/92	91.18	818.72
05/10/92	91.18	818.72
05/10/92	91.21	818.69
05/11/92	91.26	818.64
05/11/92	91.21	818.69
05/12/92	91.40	818.50
05/12/92	91.26	818.64
05/13/92	91.48	818.42
05/13/92	91.40	818.50
05/14/92	91.40	818.50
05/14/92	91.47	818.43
05/15/92	91.48	818.42
05/15/92	91.40	818.50
05/16/92	91.45	818.45
05/16/92	91.50	818.40
05/17/92	91.68	818.22
05/17/92	91.50	818.40
05/18/92	91.67	818.23
05/18/92	91.70	818.20
05/19/92	91.65	818.25
05/19/92	91.67	818.23
05/20/92	91.65	818.25
05/20/92	91.73	818.17
05/20/92	91.70	818.20
05/21/92	91.69	818.21
05/21/92	91.73	818.17
05/22/92	91.77	818.13
05/22/92	91.71	818.19
05/23/92	91.77	818.13
05/23/92	91.98	817.92
05/24/92	91.98	817.92
05/24/92	91.87	818.03
05/25/92	91.87	818.03
05/25/92	91.86	818.04
05/26/92	91.86	818.04
05/26/92	91.92	817.98
05/27/92	91.92	817.98
05/27/92	91.88	818.02
05/28/92	91.92	817.98
05/28/92	91.88	818.02
05/29/92	91.88	818.02
05/29/92	91.87	818.03
05/30/92	91.90	818.00
05/30/92	91.88	818.02
05/31/92	91.93	817.97
05/31/92	91.90	818.00
06/01/92	91.93	817.97
06/01/92	91.99	817.91
06/02/92	91.98	817.92
06/02/92	92.04	817.86
06/03/92	91.92	817.98
06/03/92	92.04	817.86
06/04/92	91.90	818.00
06/04/92	91.92	817.98
06/05/92	91.93	817.97
06/05/92	91.90	818.00
06/06/92	92.02	817.88
06/06/92	91.93	817.97
06/07/92	92.08	817.82
06/07/92	92.02	817.88
06/08/92	92.17	817.73
06/08/92	92.08	817.82
06/09/92	92.19	817.71
06/09/92	92.15	817.75
06/10/92	92.19	817.71
06/10/92	92.16	817.74
06/11/92	92.17	817.73
06/11/92	92.21	817.69
06/12/92	92.20	817.70
06/12/92	92.23	817.67
06/13/92	92.21	817.69
06/13/92	92.24	817.66
06/13/92	92.21	817.69
06/14/92	92.23	817.67
06/14/92	92.24	817.66
06/15/92	92.15	817.75
06/15/92	92.26	817.64
06/16/92	92.15	817.75
06/16/92	92.12	817.78
06/17/92	92.12	817.78
06/17/92	91.92	817.98
06/18/92	92.15	817.75
06/18/92	91.94	817.96
06/19/92	92.15	817.75
06/19/92	92.23	817.67
06/20/92	92.23	817.67
06/20/92	92.30	817.60
06/21/92	92.30	817.60
06/21/92	92.29	817.61
06/22/92	92.28	817.62
06/22/92	92.29	817.61
06/23/92	92.27	817.63
06/23/92	92.28	817.62
06/24/92	92.27	817.63
06/24/92	92.51	817.39
06/25/92	92.57	817.33
06/25/92	92.51	817.39
06/26/92	92.63	817.27
06/26/92	92.57	817.33
06/27/92	92.57	817.33
06/27/92	92.63	817.27
06/28/92	92.62	817.28
06/28/92	92.57	817.33
06/29/92	92.66	817.24
06/29/92	92.62	817.28
06/30/92	92.52	817.38
06/30/92	92.66	817.24
07/01/92	92.51	817.39
07/01/92	92.52	817.38
07/02/92	92.52	817.38
07/02/92	92.51	817.39
07/03/92	92.52	817.38
07/03/92	92.54	817.36
07/04/92	92.54	817.36
07/04/92	92.57	817.33
07/05/92	92.60	817.30
07/05/92	92.57	817.33
07/06/92	92.57	817.33
07/06/92	92.60	817.30
07/07/92	92.57	817.33
07/07/92	92.55	817.35
07/08/92	92.56	817.34
07/08/92	92.55	817.35
07/09/92	92.55	817.35
07/09/92	92.56	817.34
07/10/92	92.55	817.35
07/10/92	92.58	817.32
07/11/92	92.56	817.34
07/11/92	92.58	817.32
07/12/92	92.56	817.34
07/12/92	92.55	817.35
07/13/92	92.56	817.34
07/13/92	92.56	817.34
07/14/92	92.56	817.34

138-049-22BBA2 **(Continued)** MP Elev (msl,ft)=909.9

West Fargo South Aquifer SI (ft.)=245-250

Date	Depth to Water (ft)	WL Elev (msl, ft)
07/14/92	92.51	817.39
07/15/92	92.50	817.40
07/15/92	92.51	817.39
07/16/92	92.50	817.40
07/16/92	92.50	817.40
07/17/92	92.57	817.33
07/17/92	92.50	817.40
07/18/92	92.56	817.34
07/18/92	92.57	817.33
07/19/92	92.59	817.31
07/19/92	92.56	817.34
07/20/92	92.59	817.31
07/20/92	92.63	817.27
07/21/92	92.64	817.26
07/21/92	92.63	817.27
07/22/92	92.65	817.25
07/22/92	92.64	817.26
07/23/92	92.67	817.23
07/23/92	92.65	817.25
07/24/92	92.63	817.27
07/24/92	92.67	817.23
07/25/92	92.63	817.27
07/25/92	92.62	817.28
07/26/92	92.65	817.25
07/26/92	92.46	817.44
07/26/92	92.62	817.28
07/27/92	92.65	817.25
07/27/92	92.62	817.28
07/28/92	92.66	817.24
07/28/92	92.62	817.28
07/29/92	92.66	817.24
07/29/92	92.68	817.22
07/30/92	92.66	817.24
07/30/92	92.73	817.17
07/31/92	92.72	817.18
07/31/92	92.68	817.22
08/01/92	92.72	817.18
08/01/92	92.69	817.21
08/02/92	92.73	817.17
08/02/92	92.72	817.18
08/03/92	92.77	817.13
08/03/92	92.73	817.17
08/04/92	92.77	817.13
08/04/92	92.81	817.09
08/05/92	92.84	817.06
08/05/92	92.81	817.09
08/06/92	92.65	817.25
08/06/92	92.82	817.08
08/07/92	92.64	817.26
08/07/92	92.65	817.25
08/08/92	92.64	817.26
08/08/92	92.65	817.25
08/09/92	92.64	817.26
08/09/92	92.70	817.20
08/10/92	92.70	817.20
08/10/92	92.81	817.09
08/11/92	92.81	817.09
08/11/92	92.84	817.06
08/12/92	92.87	817.03
08/12/92	92.82	817.08
08/13/92	92.87	817.03
08/13/92	92.89	817.01
08/14/92	92.89	817.01
08/14/92	92.92	816.98
08/15/92	92.92	816.98
08/15/92	92.98	816.92
08/16/92	92.92	816.98
08/16/92	92.87	817.03
08/17/92	92.90	817.00
08/17/92	92.87	817.03
08/18/92	92.90	817.00
08/18/92	93.07	816.83
08/19/92	93.07	816.83
08/19/92	93.09	816.81
08/20/92	93.09	816.81
08/20/92	93.09	816.81
08/21/92	93.09	816.81
08/21/92	93.09	816.81
08/22/92	93.09	816.81
08/22/92	93.09	816.81
08/23/92	93.09	816.81
08/23/92	93.09	816.81
08/24/92	93.09	816.81
08/24/92	93.10	816.80
08/25/92	93.10	816.80
08/25/92	93.10	816.80
08/26/92	93.17	816.73
08/26/92	93.10	816.80
08/27/92	93.17	816.73
08/27/92	92.77	817.13
08/27/92	93.26	816.64
08/28/92	93.26	816.64
08/28/92	93.26	816.64
08/29/92	93.26	816.64
08/29/92	93.26	816.64
08/30/92	93.26	816.64
08/30/92	93.26	816.64
08/31/92	93.27	816.63
08/31/92	93.26	816.64
09/01/92	93.27	816.63
09/01/92	93.27	816.63
09/02/92	93.27	816.63
09/02/92	93.27	816.63
09/03/92	93.27	816.63
09/03/92	93.27	816.63
09/04/92	93.27	816.63
09/04/92	93.27	816.63
09/05/92	93.27	816.63
09/05/92	93.27	816.63
09/06/92	93.27	816.63
09/06/92	93.27	816.63
09/07/92	93.28	816.62
09/07/92	93.27	816.63
09/08/92	93.28	816.62
09/08/92	93.28	816.62
09/09/92	93.28	816.62
09/09/92	93.28	816.62
09/10/92	93.28	816.62
09/10/92	93.28	816.62
09/24/92	92.66	817.24
10/17/92	92.92	816.98
11/11/92	92.61	817.29
11/20/92	92.71	817.19
11/20/92	92.80	817.10
11/21/92	92.71	817.19
11/21/92	92.71	817.19
11/22/92	92.65	817.25
11/22/92	92.71	817.19
11/23/92	92.66	817.24
11/23/92	92.64	817.26
11/24/92	92.66	817.24
11/24/92	92.68	817.22
11/25/92	92.68	817.22
11/25/92	92.69	817.21
11/26/92	92.69	817.21
11/26/92	92.67	817.23
11/27/92	92.64	817.26
11/27/92	92.67	817.23
11/28/92	92.64	817.26
11/28/92	92.59	817.31
11/29/92	92.59	817.31
11/29/92	92.59	817.31
11/30/92	92.59	817.31
11/30/92	92.53	817.37
12/01/92	92.53	817.37
12/01/92	92.49	817.41
12/02/92	92.49	817.41
12/02/92	92.51	817.39
12/03/92	92.51	817.39
12/03/92	92.54	817.36
12/04/92	92.54	817.36
12/04/92	92.58	817.32
12/05/92	92.55	817.35
12/05/92	92.58	817.32
12/06/92	92.16	817.74
12/06/92	92.55	817.35
12/06/92	92.51	817.39
12/07/92	92.51	817.39
12/07/92	92.51	817.39
12/08/92	92.50	817.40
12/08/92	92.51	817.39
12/09/92	92.48	817.42
12/09/92	92.50	817.40
12/10/92	92.48	817.42
12/10/92	92.48	817.42
12/11/92	92.48	817.42
12/11/92	92.48	817.42
12/12/92	92.48	817.42
12/12/92	92.48	817.42
12/13/92	92.48	817.42
12/13/92	92.48	817.42
12/14/92	92.47	817.43
12/14/92	92.48	817.42
12/15/92	92.47	817.43
12/15/92	92.47	817.43
12/16/92	92.47	817.43
12/16/92	92.47	817.43
12/17/92	92.47	817.43
12/17/92	92.47	817.43
12/18/92	92.47	817.43
12/18/92	92.47	817.43
12/19/92	92.47	817.43
12/19/92	92.47	817.43
12/20/92	92.47	817.43
12/20/92	92.47	817.43
12/21/92	92.47	817.43
12/21/92	92.46	817.44
12/22/92	92.46	817.44
12/22/92	92.46	817.44
12/23/92	92.46	817.44
12/23/92	92.46	817.44
12/24/92	92.39	817.51
12/24/92	92.46	817.44
12/25/92	92.39	817.51
12/25/92	92.39	817.51
12/26/92	92.39	817.51
12/26/92	92.39	817.51
12/27/92	92.39	817.51
12/27/92	92.39	817.51
12/28/92	92.39	817.51
12/28/92	92.39	817.51
12/29/92	92.39	817.51
12/29/92	92.39	817.51
12/30/92	92.39	817.51
12/30/92	92.39	817.51
12/31/92	92.39	817.51
12/31/92	92.39	817.51
01/01/93	92.39	817.51
01/01/93	92.39	817.51
01/02/93	92.08	817.82
01/02/93	92.39	817.51
01/03/93	92.07	817.83
01/03/93	92.08	817.82
01/04/93	92.07	817.83
01/04/93	92.08	817.82
01/05/93	92.08	817.82
01/05/93	92.10	817.80
01/06/93	92.10	817.80
01/06/93	92.09	817.81
01/07/93	92.07	817.83
01/07/93	92.09	817.81
01/08/93	92.07	817.83
01/08/93	92.12	817.78
01/09/93	92.12	817.78
01/09/93	92.18	817.72
01/10/93	92.16	817.74
01/10/93	92.19	817.71
01/11/93	92.09	817.81
01/11/93	92.16	817.74
01/12/93	91.95	817.95
01/12/93	92.09	817.81
01/13/93	91.95	817.95
01/13/93	91.94	817.96
01/14/93	91.95	817.95
01/14/93	91.94	817.96
01/15/93	91.94	817.96
01/15/93	91.79	818.11
01/16/93	91.79	818.11
01/16/93	91.72	818.18
01/17/93	91.82	818.08
01/17/93	91.77	818.13
01/18/93	91.83	818.07
01/18/93	91.81	818.09
01/19/93	91.82	818.08
01/19/93	91.83	818.07
01/20/93	91.82	818.08
01/20/93	91.74	818.16
01/21/93	91.64	818.26
01/21/93	91.74	818.16
01/22/93	91.64	818.26
01/22/93	91.61	818.29
01/23/93	91.59	818.31
01/23/93	91.64	818.26
01/24/93	91.64	818.26
01/24/93	91.70	818.20
01/25/93	91.57	818.33
01/25/93	91.70	818.20
01/26/93	91.55	818.35
01/26/93	91.59	818.31
01/27/93	91.53	818.37
01/27/93	91.60	818.30
01/28/93	91.65	818.25
01/28/93	91.53	818.37
01/29/93	91.66	818.24
01/29/93	91.61	818.29
01/30/93	91.50	818.40
01/30/93	91.61	818.29
01/31/93	91.53	818.37
01/31/93	91.49	818.41
02/01/93	91.54	818.36
02/01/93	91.53	818.37
02/02/93	91.51	818.39
02/02/93	91.54	818.36
02/03/93	91.51	818.39
02/03/93	91.57	818.33
02/04/93	91.57	818.33
02/04/93	91.56	818.34
02/05/93	91.53	818.37
02/05/93	91.56	818.34
02/06/93	91.45	818.45
02/06/93	91.53	818.37
02/07/93	91.45	818.45
02/07/93	91.44	818.46
02/08/93	91.44	818.46
02/08/93	91.45	818.45
02/09/93	91.41	818.49
02/09/93	91.44	818.46
02/10/93	91.46	818.44
02/10/93	91.41	818.49
02/11/93	91.45	818.45
02/11/93	91.46	818.44
02/12/93	91.45	818.45
02/12/93	91.40	818.50
02/13/93	91.39	818.51
02/13/93	91.40	818.50
02/14/93	91.39	818.51
02/14/93	91.39	818.51
02/15/93	91.39	818.51
02/15/93	91.39	818.51
02/16/93	91.42	818.48
02/16/93	91.39	818.51
02/17/93	91.42	818.48
02/17/93	91.40	818.50
02/18/93	91.33	818.57
02/18/93	91.40	818.50
02/19/93	91.30	818.60
02/19/93	91.33	818.57
02/20/93	91.30	818.60
02/20/93	91.22	818.68
02/21/93	91.22	818.68
02/21/93	91.19	818.71
02/22/93	91.24	818.66
02/22/93	91.19	818.71
02/23/93	91.24	818.66
02/23/93	91.26	818.64
02/24/93	91.26	818.64
02/24/93	91.27	818.63
02/25/93	91.27	818.63
02/25/93	91.27	818.63

138-049-22BBA2 **(Continued)** MP Elev (msl,ft)=909.9

West Fargo South Aquifer SI (ft.)=245-250

Date	Depth to Water (ft)	WL Elev (msl, ft)
02/26/93	91.27	818.63
02/26/93	91.29	818.61
02/27/93	91.29	818.61
02/27/93	91.24	818.66
02/28/93	91.24	818.66
02/28/93	91.13	818.77
03/01/93	91.10	818.80
03/01/93	91.13	818.77
03/02/93	91.10	818.80
03/03/93	91.11	818.79
03/04/93	91.15	818.75
03/04/93	91.11	818.79
03/05/93	91.15	818.75
03/11/93	91.10	818.80
03/12/93	91.09	818.81
03/12/93	91.12	818.78
03/13/93	91.12	818.78
04/13/93	90.70	819.20
04/13/93	90.70	819.20
04/14/93	90.70	819.20
04/14/93	90.68	819.22
04/15/93	90.68	819.22
04/15/93	90.65	819.25
04/16/93	90.65	819.25
04/16/93	90.63	819.27
04/17/93	90.60	819.30
04/17/93	90.63	819.27
04/18/93	90.58	819.32
04/18/93	90.60	819.30
04/19/93	90.64	819.26
04/19/93	90.60	819.30
04/20/93	90.69	819.21
04/20/93	90.64	819.26
04/21/93	90.71	819.19
04/21/93	90.68	819.22
04/22/93	90.68	819.22
04/22/93	90.60	819.30
04/23/93	90.60	819.30
04/23/93	90.46	819.44
04/24/93	90.52	819.38
04/24/93	90.43	819.47
04/25/93	90.52	819.38
04/25/93	90.63	819.27
04/26/93	90.62	819.28
04/26/93	90.64	819.26
04/27/93	90.62	819.28
04/27/93	90.56	819.34
04/28/93	90.59	819.31
04/28/93	90.56	819.34
04/29/93	90.59	819.31
04/29/93	90.59	819.31
04/30/93	90.59	819.31
04/30/93	90.62	819.28
05/01/93	90.62	819.28
05/01/93	90.64	819.26
05/01/93	90.27	819.63
05/02/93	90.63	819.27
05/02/93	90.64	819.26
05/03/93	90.63	819.27
05/03/93	90.58	819.32
05/04/93	90.58	819.32
05/04/93	90.58	819.32
05/05/93	90.58	819.32
05/05/93	90.63	819.27
05/06/93	90.63	819.27
05/06/93	90.63	819.27
05/07/93	90.63	819.27
05/07/93	90.53	819.37
05/08/93	90.52	819.38
05/08/93	90.53	819.37
05/09/93	90.61	819.29
05/09/93	90.52	819.38
05/10/93	90.71	819.19
05/10/93	90.61	819.29
05/11/93	90.74	819.16
05/11/93	90.71	819.19
05/12/93	90.74	819.16
05/12/93	90.74	819.16
05/13/93	90.74	819.16
05/13/93	90.68	819.22
05/14/93	90.70	819.20
05/14/93	90.67	819.23
05/15/93	90.73	819.17
05/15/93	90.70	819.20
05/16/93	90.78	819.12
05/16/93	90.73	819.17
05/17/93	90.83	819.07
05/17/93	90.78	819.12
05/18/93	90.89	819.01
05/18/93	90.83	819.07
05/19/93	90.89	819.01
05/19/93	90.93	818.97
05/20/93	90.95	818.95
05/20/93	90.93	818.97
05/21/93	90.97	818.93
05/21/93	90.95	818.95
05/22/93	90.97	818.93
05/22/93	90.94	818.96
05/23/93	90.94	818.96
05/23/93	90.90	819.00
05/24/93	91.05	818.85
05/24/93	90.90	819.00
05/25/93	91.05	818.85
05/25/93	91.17	818.73
05/26/93	91.32	818.58
05/26/93	91.17	818.73
05/27/93	91.22	818.68
05/27/93	91.31	818.59
05/28/93	91.40	818.50
05/28/93	91.28	818.62
05/29/93	91.40	818.50
05/29/93	91.42	818.48
05/30/93	91.42	818.48
05/30/93	91.46	818.44
05/31/93	91.46	818.44
05/31/93	91.53	818.37
06/01/93	91.53	818.37
06/01/93	91.53	818.37
06/02/93	91.53	818.37
06/02/93	91.62	818.28
06/03/93	91.72	818.18
06/03/93	91.62	818.28
06/04/93	91.72	818.18
06/04/93	91.70	818.20
06/05/93	91.75	818.15
06/05/93	91.72	818.18
06/05/93	91.35	818.55
06/06/93	91.75	818.15
06/06/93	91.76	818.14
06/07/93	91.71	818.19
06/07/93	91.81	818.09
06/08/93	91.68	818.22
06/08/93	91.71	818.19
06/09/93	91.68	818.22
06/09/93	91.82	818.08
06/10/93	91.82	818.08
06/10/93	91.94	817.96
06/11/93	92.00	817.90
06/11/93	91.94	817.96
06/12/93	92.06	817.84
06/12/93	92.00	817.90
06/13/93	92.13	817.77
06/13/93	92.06	817.84
06/14/93	92.13	817.77
06/14/93	92.27	817.63
06/15/93	92.27	817.63
06/15/93	92.35	817.55
06/16/93	92.33	817.57
06/16/93	92.35	817.55
06/17/93	92.33	817.57
06/17/93	92.44	817.46
06/18/93	92.44	817.46
06/18/93	92.57	817.33
06/19/93	92.57	817.33
06/19/93	92.57	817.33
06/20/93	92.67	817.23
06/20/93	92.57	817.33
06/21/93	92.67	817.23
06/21/93	92.66	817.24
06/22/93	92.67	817.23
06/22/93	92.66	817.24
06/23/93	92.66	817.24
06/23/93	92.66	817.24
06/24/93	92.66	817.24
06/24/93	92.66	817.24
06/25/93	92.66	817.24
06/25/93	92.68	817.22
06/26/93	92.68	817.22
06/26/93	92.73	817.17
06/27/93	92.73	817.17
06/27/93	92.79	817.11
06/28/93	92.85	817.05
06/28/93	92.79	817.11
06/29/93	92.90	817.00
06/29/93	92.83	817.07
06/30/93	92.86	817.04
06/30/93	92.83	817.07
07/01/93	92.86	817.04
07/01/93	92.91	816.99
07/02/93	92.95	816.95
07/02/93	92.91	816.99
07/03/93	92.85	817.05
07/03/93	92.96	816.94
07/04/93	92.83	817.07
07/04/93	92.85	817.05
07/05/93	92.83	817.07
07/05/93	92.88	817.02
07/06/93	93.04	816.86
07/06/93	92.88	817.02
07/07/93	93.11	816.79
07/07/93	93.04	816.86
07/08/93	93.11	816.79
07/08/93	93.15	816.75
07/09/93	93.15	816.75
07/09/93	93.30	816.60
07/10/93	93.30	816.60
07/10/93	93.39	816.51
07/11/93	93.44	816.46
07/11/93	93.39	816.51
07/12/93	93.44	816.46
07/12/93	93.47	816.43
07/13/93	93.50	816.40
07/13/93	93.47	816.43
07/14/93	93.57	816.33
07/14/93	93.50	816.40
07/15/93	93.58	816.32
07/15/93	93.56	816.34
07/16/93	93.56	816.34
07/16/93	93.56	816.34
07/17/93	93.56	816.34
07/17/93	93.56	816.34
07/18/93	93.56	816.34
07/18/93	93.56	816.34
07/19/93	93.58	816.32
07/19/93	93.56	816.34
07/20/93	93.58	816.32
07/20/93	93.63	816.27
07/21/93	93.63	816.27
07/21/93	93.66	816.24
07/22/93	93.66	816.24
07/22/93	93.66	816.24
07/23/93	93.66	816.24
07/23/93	93.66	816.24
07/24/93	93.66	816.24
07/24/93	93.66	816.24
07/25/93	93.66	816.24
07/25/93	93.64	816.26
07/26/93	93.65	816.25
07/26/93	93.64	816.26
07/27/93	93.65	816.25
07/27/93	93.65	816.25
07/28/93	93.65	816.25
07/28/93	93.75	816.15
07/29/93	93.75	816.15
07/29/93	93.82	816.08
07/30/93	93.82	816.08
07/30/93	93.82	816.08
07/31/93	93.85	816.05
07/31/93	93.82	816.08
08/01/93	93.85	816.05
08/01/93	93.86	816.04
08/02/93	93.88	816.02
08/02/93	93.86	816.04
08/03/93	93.95	815.95
08/03/93	93.88	816.02
08/04/93	93.95	815.95
08/04/93	93.98	815.92
08/05/93	94.03	815.87
08/05/93	93.98	815.92
08/05/93	93.58	816.32
08/06/93	94.03	815.87
08/06/93	94.03	815.87
08/07/93	94.04	815.86
08/07/93	94.03	815.87
08/08/93	94.04	815.86
08/08/93	94.04	815.86
08/09/93	94.06	815.84
08/09/93	94.04	815.86
08/10/93	94.06	815.84
08/10/93	94.18	815.72
08/11/93	94.18	815.72
08/11/93	94.20	815.70
08/12/93	94.23	815.67
08/12/93	94.20	815.70
08/13/93	94.23	815.67
08/13/93	94.25	815.65
08/14/93	94.25	815.65
08/14/93	94.25	815.65
08/15/93	94.25	815.65
08/15/93	94.25	815.65
08/16/93	94.25	815.65
08/16/93	94.27	815.63
08/17/93	94.27	815.63
08/17/93	94.27	815.63
08/18/93	94.27	815.63
08/18/93	94.27	815.63
08/19/93	94.30	815.60
08/19/93	94.27	815.63
08/20/93	94.30	815.60
08/20/93	94.39	815.51
08/21/93	94.39	815.51
08/21/93	94.39	815.51
08/22/93	94.39	815.51
08/22/93	94.39	815.51
08/23/93	94.39	815.51
08/23/93	94.39	815.51
08/24/93	94.39	815.51
08/24/93	94.39	815.51
08/25/93	94.43	815.47
08/25/93	94.39	815.51
08/26/93	94.43	815.47
08/26/93	94.51	815.39
08/27/93	94.51	815.39
08/27/93	94.56	815.34
08/28/93	94.11	815.79
08/28/93	94.56	815.34
08/28/93	94.54	815.36
08/29/93	94.54	815.36
08/29/93	94.54	815.36
08/30/93	94.58	815.32
08/30/93	94.54	815.36
08/31/93	94.62	815.28
08/31/93	94.58	815.32
09/01/93	94.56	815.34
09/01/93	94.62	815.28
09/02/93	94.56	815.34
09/02/93	94.65	815.25
09/03/93	94.68	815.22
09/03/93	94.65	815.25
09/04/93	94.68	815.22
09/04/93	94.76	815.14
09/05/93	94.76	815.14
09/05/93	94.82	815.08
09/06/93	94.95	814.95
09/06/93	94.82	815.08
09/07/93	94.95	814.95
09/07/93	95.04	814.86
09/08/93	95.04	814.86
09/08/93	95.11	814.79
09/09/93	95.11	814.79

138-049-22BBA2 **(Continued)** MP Elev (msl,ft)=909.9

West Fargo South Aquifer SI (ft.)=245-250

Date	Depth to Water (ft)	WL Elev (msl, ft)	Date	Depth to Water (ft)	WL Elev (msl, ft)	Date	Depth to Water (ft)	WL Elev (msl, ft)	Date	Depth to Water (ft)	WL Elev (msl, ft)
09/25/93	94.78	815.12	03/05/94	94.54	815.36	04/14/94	94.45	815.45	05/23/94	94.86	815.04
10/18/93	95.10	814.80	03/06/94	94.54	815.36	04/15/94	94.49	815.41	05/24/94	94.85	815.05
11/12/93	95.03	814.87	03/06/94	94.62	815.28	04/15/94	94.45	815.45	05/24/94	94.87	815.03
			03/07/94	94.62	815.28	04/16/94	94.49	815.41	05/25/94	94.86	815.04
01/26/94	94.95	814.95	03/07/94	94.66	815.24	04/16/94	94.53	815.37	05/25/94	94.85	815.05
01/27/94	94.88	815.02	03/08/94	94.66	815.24	04/16/94	94.61	815.29	05/26/94	95.02	814.88
01/27/94	94.95	814.95	03/08/94	94.71	815.19	04/17/94	94.60	815.30	05/26/94	94.85	815.05
01/28/94	94.88	815.02	03/09/94	94.71	815.19	04/17/94	94.62	815.28	05/27/94	94.98	814.92
01/28/94	94.84	815.06	03/09/94	94.66	815.24	04/18/94	94.60	815.30	05/27/94	95.03	814.87
01/29/94	94.94	814.96	03/10/94	94.66	815.24	04/18/94	94.53	815.37	05/28/94	94.98	814.92
01/29/94	94.85	815.05	03/10/94	94.70	815.20	04/19/94	94.58	815.32	05/28/94	94.92	814.98
01/30/94	94.94	814.96	03/11/94	94.69	815.21	04/19/94	94.68	815.22	05/29/94	94.92	814.98
01/30/94	94.98	814.92	03/11/94	94.70	815.20	04/20/94	94.71	815.19	05/29/94	94.95	814.95
01/31/94	94.92	814.98	03/12/94	94.69	815.21	04/20/94	94.68	815.22	05/30/94	94.95	814.95
01/31/94	94.98	814.92	03/12/94	94.72	815.18	04/21/94	94.74	815.16	05/30/94	95.05	814.85
02/01/94	94.81	815.09	03/13/94	94.71	815.19	04/21/94	94.71	815.19	05/31/94	95.16	814.74
02/01/94	94.92	814.98	03/13/94	94.55	815.35	04/22/94	94.74	815.16	05/31/94	95.05	814.85
02/02/94	94.77	815.13	03/14/94	94.51	815.39	04/22/94	94.69	815.21	06/01/94	95.16	814.74
02/02/94	94.81	815.09	03/14/94	94.55	815.35	04/23/94	94.54	815.36	06/01/94	95.24	814.66
02/03/94	94.77	815.13	03/15/94	94.51	815.39	04/23/94	94.69	815.21	06/02/94	95.31	814.59
02/03/94	94.77	815.13	03/15/94	94.62	815.28	04/24/94	94.54	815.36	06/02/94	95.24	814.66
02/04/94	94.75	815.15	03/16/94	94.56	815.34	04/24/94	94.56	815.34	06/03/94	95.31	814.59
02/04/94	94.77	815.13	03/16/94	94.63	815.27	04/25/94	94.55	815.35	06/03/94	95.35	814.55
02/05/94	94.72	815.18	03/17/94	94.39	815.51	04/25/94	94.52	815.38	06/04/94	95.34	814.56
02/05/94	94.75	815.15	03/17/94	94.56	815.34	04/26/94	94.52	815.38	06/04/94	95.27	814.63
02/06/94	94.72	815.18	03/18/94	94.39	815.51	04/26/94	94.43	815.47	06/05/94	95.26	814.64
02/06/94	94.85	815.05	03/18/94	94.45	815.45	04/27/94	94.46	815.44	06/05/94	95.27	814.63
02/07/94	94.85	815.05	03/19/94	94.39	815.51	04/27/94	94.65	815.25	06/06/94	95.33	814.57
02/07/94	94.89	815.01	03/19/94	94.45	815.45	04/28/94	94.70	815.20	06/06/94	95.26	814.64
02/08/94	94.85	815.05	03/20/94	94.39	815.51	04/28/94	94.65	815.25	06/07/94	95.33	814.57
02/08/94	94.89	815.01	03/20/94	94.47	815.43	04/29/94	94.70	815.20	06/07/94	95.48	814.42
02/09/94	94.81	815.09	03/21/94	94.47	815.43	04/29/94	94.70	815.20	06/08/94	95.48	814.42
02/09/94	94.85	815.05	03/21/94	94.47	815.43	04/30/94	94.70	815.20	06/08/94	95.63	814.27
02/10/94	94.75	815.15	03/22/94	94.45	815.45	04/30/94	94.70	815.20	06/09/94	95.62	814.28
02/10/94	94.81	815.09	03/22/94	94.47	815.43	05/01/94	94.70	815.20	06/09/94	95.60	814.30
02/11/94	94.76	815.14	03/23/94	94.46	815.44	05/01/94	94.70	815.20	06/10/94	95.61	814.29
02/11/94	94.76	815.14	03/23/94	94.49	815.41	05/02/94	94.70	815.20	06/10/94	95.63	814.27
02/12/94	94.76	815.14	03/24/94	94.49	815.41	05/02/94	94.70	815.20	06/11/94	95.62	814.28
02/12/94	94.76	815.14	03/24/94	94.59	815.31	05/03/94	94.63	815.27	06/11/94	95.35	814.55
02/13/94	94.72	815.18	03/25/94	94.57	815.33	05/03/94	94.70	815.20	07/24/94	96.32	813.58
02/13/94	94.76	815.14	03/25/94	94.59	815.31	05/04/94	94.66	815.24	08/20/94	96.70	813.20
02/14/94	94.66	815.24	03/26/94	94.47	815.43	05/04/94	94.63	815.27	09/20/94	96.94	812.96
02/14/94	94.72	815.18	03/26/94	94.57	815.33	05/05/94	94.66	815.24	09/21/94	96.89	813.01
02/15/94	94.75	815.15	03/27/94	94.47	815.43	05/05/94	94.71	815.19	09/21/94	96.92	812.98
02/15/94	94.68	815.22	03/27/94	94.49	815.41	05/06/94	94.72	815.18	09/22/94	96.95	812.95
02/16/94	94.71	815.19	03/28/94	94.52	815.38	05/06/94	94.71	815.19	09/22/94	96.92	812.98
02/16/94	94.74	815.16	03/28/94	94.49	815.41	05/07/94	94.72	815.18	09/23/94	96.95	812.95
02/17/94	94.63	815.27	03/29/94	94.64	815.26	05/07/94	94.70	815.20	09/23/94	96.95	812.95
02/17/94	94.71	815.19	03/29/94	94.52	815.38	05/08/94	94.70	815.20	09/24/94	96.95	812.95
02/18/94	94.43	815.47	03/30/94	94.64	815.26	05/08/94	94.65	815.25	09/24/94	97.00	812.90
02/18/94	94.63	815.27	03/30/94	94.62	815.28	05/09/94	94.65	815.25	09/25/94	97.01	812.89
02/19/94	94.43	815.47	03/31/94	94.62	815.28	05/09/94	94.67	815.23	09/25/94	97.00	812.90
02/19/94	94.57	815.33	03/31/94	94.58	815.32	05/10/94	94.67	815.23	09/26/94	96.99	812.91
02/20/94	94.57	815.33	04/01/94	94.58	815.32	05/10/94	94.63	815.27	09/26/94	97.01	812.89
02/20/94	94.75	815.15	04/01/94	94.52	815.38	05/11/94	94.69	815.21	09/27/94	96.95	812.95
02/21/94	94.75	815.15	04/02/94	94.58	815.32	05/11/94	94.63	815.27	09/27/94	96.99	812.91
02/21/94	94.84	815.06	04/02/94	94.53	815.37	05/12/94	94.74	815.16	09/28/94	96.98	812.92
02/22/94	94.82	815.08	04/03/94	94.58	815.32	05/12/94	94.69	815.21	09/28/94	96.95	812.95
02/22/94	94.84	815.06	04/03/94	94.55	815.35	05/13/94	94.60	815.30	09/29/94	97.00	812.90
02/23/94	94.74	815.16	04/04/94	94.57	815.33	05/13/94	94.73	815.17	09/29/94	96.98	812.92
02/23/94	94.82	815.08	04/04/94	94.54	815.36	05/14/94	94.60	815.30	09/30/94	97.03	812.87
02/24/94	94.67	815.23	04/05/94	94.57	815.33	05/14/94	94.61	815.29	09/30/94	97.00	812.90
02/24/94	94.74	815.16	04/05/94	94.57	815.33	05/15/94	94.73	815.17	10/01/94	97.03	812.87
02/25/94	94.65	815.25	04/06/94	94.57	815.33	05/15/94	94.69	815.21	10/01/94	97.07	812.83
02/25/94	94.77	815.13	04/06/94	94.57	815.33	05/15/94	94.61	815.29	10/02/94	97.07	812.83
02/26/94	94.77	815.13	04/07/94	94.57	815.33	05/16/94	94.73	815.17	10/02/94	97.07	812.83
02/26/94	94.81	815.09	04/07/94	94.57	815.33	05/16/94	94.73	815.17	10/03/94	97.05	812.85
02/27/94	94.74	815.16	04/08/94	94.57	815.33	05/17/94	94.73	815.17	10/03/94	97.14	812.76
02/27/94	94.81	815.09	04/08/94	94.36	815.54	05/17/94	94.73	815.17	10/04/94	97.14	812.76
02/28/94	94.74	815.16	04/09/94	94.52	815.38	05/18/94	94.76	815.14	10/04/94	97.17	812.73
02/28/94	94.74	815.16	04/09/94	94.37	815.53	05/18/94	94.73	815.17	10/05/94	97.04	812.86
03/01/94	94.69	815.21	04/10/94	94.65	815.25	05/19/94	94.76	815.14	10/05/94	97.17	812.73
03/01/94	94.74	815.16	04/10/94	94.52	815.38	05/19/94	94.81	815.09	10/06/94	96.86	813.04
03/02/94	94.64	815.26	04/11/94	94.68	815.22	05/20/94	94.81	815.09	10/06/94	97.04	812.86
03/02/94	94.69	815.21	04/11/94	94.65	815.25	05/20/94	94.78	815.12	10/07/94	96.95	812.95
03/03/94	94.57	815.33	04/12/94	94.68	815.22	05/21/94	94.78	815.12	10/07/94	96.83	813.07
03/03/94	94.64	815.26	04/12/94	94.57	815.33	05/21/94	94.85	815.05	10/08/94	96.95	812.95
03/04/94	94.57	815.33	04/13/94	94.57	815.33	05/22/94	94.85	815.05	10/08/94	97.03	812.87
03/04/94	94.57	815.33	04/13/94	94.45	815.45	05/22/94	94.88	815.02	10/09/94	97.03	812.87
03/05/94	94.57	815.33	04/14/94	94.45	815.45	05/23/94	94.88	815.02	10/09/94	97.11	812.79

138-049-22BBA2 (Continued) MP Elev (msl,ft)=909.9

West Fargo South Aquifer SI (ft.)=245-250

Date	Depth to Water (ft)	WL Elev (msl, ft)
10/10/94	97.11	812.79
10/10/94	97.10	812.80
10/11/94	97.10	812.80
10/11/94	97.09	812.81
10/12/94	97.09	812.81
10/12/94	97.09	812.81
10/13/94	97.15	812.75
10/13/94	97.09	812.81
10/14/94	97.12	812.78
10/14/94	97.15	812.75
10/15/94	97.10	812.80
10/15/94	97.12	812.78
10/16/94	97.10	812.80
10/16/94	97.03	812.87
10/17/94	97.03	812.87
10/17/94	96.95	812.95
10/18/94	96.84	813.06
10/18/94	96.95	812.95
10/19/94	96.86	813.04
10/19/94	96.99	812.91
10/20/94	97.01	812.89
10/20/94	96.99	812.91
10/21/94	97.00	812.90
10/21/94	97.01	812.89
10/22/94	97.00	812.90
10/22/94	96.98	812.92
10/23/94	97.00	812.90
10/23/94	97.10	812.80
10/24/94	97.19	812.71
10/24/94	97.10	812.80
10/25/94	97.22	812.68
10/25/94	97.19	812.71
10/26/94	97.16	812.74
10/26/94	97.22	812.68
10/27/94	97.07	812.83
10/27/94	97.16	812.74
10/28/94	97.07	812.83
10/28/94	97.02	812.88
10/28/94	96.99	812.91
10/29/94	97.16	812.74
10/29/94	97.04	812.86
10/30/94	97.16	812.74
10/30/94	97.20	812.70
10/31/94	97.20	812.70
10/31/94	97.22	812.68
11/01/94	97.21	812.69
11/01/94	97.10	812.80
11/02/94	97.09	812.81
11/02/94	97.18	812.72
11/03/94	97.18	812.72
11/03/94	97.25	812.65
11/04/94	97.25	812.65
11/04/94	97.24	812.66
11/05/94	97.23	812.67
11/05/94	97.24	812.66
11/06/94	97.36	812.54
11/06/94	97.23	812.67
11/07/94	97.27	812.63
11/07/94	97.36	812.54
11/08/94	97.27	812.63
11/08/94	97.37	812.53
11/09/94	97.37	812.53
11/09/94	97.44	812.46
11/10/94	97.45	812.45
11/10/94	97.43	812.47
11/11/94	97.37	812.53
11/11/94	97.43	812.47
11/12/94	97.22	812.68
11/12/94	97.37	812.53
11/13/94	97.22	812.68
11/13/94	97.17	812.73
11/14/94	97.20	812.70
11/14/94	97.46	812.44
11/15/94	97.46	812.44
11/15/94	97.51	812.39
11/16/94	97.51	812.39
11/16/94	97.36	812.54
11/17/94	97.17	812.73
11/17/94	97.36	812.54
11/18/94	97.16	812.74
11/18/94	97.42	812.48
11/19/94	97.42	812.48
11/19/94	97.46	812.44
11/20/94	97.46	812.44
11/20/94	97.35	812.55
11/21/94	97.35	812.55
11/21/94	97.49	812.41
11/22/94	97.49	812.41
11/22/94	97.54	812.36
11/23/94	97.49	812.41
11/23/94	97.55	812.35
11/24/94	97.51	812.39
11/24/94	97.49	812.41
11/25/94	97.51	812.39
11/25/94	97.58	812.32
11/26/94	97.57	812.33
11/26/94	97.58	812.32
11/26/94	97.51	812.39
11/27/94	97.34	812.56
11/27/94	97.51	812.39
11/28/94	97.39	812.51
11/28/94	97.32	812.58
11/29/94	97.39	812.51
11/29/94	97.48	812.42
11/30/94	97.47	812.43
11/30/94	97.49	812.41
12/01/94	97.40	812.50
12/01/94	97.47	812.43
12/02/94	97.42	812.48
12/02/94	97.41	812.49
12/03/94	97.42	812.48
12/03/94	97.49	812.41
12/04/94	97.49	812.41
12/04/94	97.61	812.29
12/05/94	97.61	812.29
12/05/94	97.67	812.23
12/06/94	97.68	812.22
12/06/94	97.67	812.23
12/07/94	97.67	812.23
12/07/94	97.68	812.22
12/08/94	97.66	812.24
12/08/94	97.67	812.23
12/09/94	97.59	812.31
12/09/94	97.66	812.24
12/10/94	97.66	812.24
12/10/94	97.59	812.31
12/11/94	97.61	812.29
12/11/94	97.66	812.24
12/12/94	97.60	812.30
12/12/94	97.64	812.26
12/13/94	97.64	812.26
12/13/94	97.66	812.24
12/14/94	97.66	812.24
12/14/94	97.66	812.24
12/15/94	97.56	812.34
12/15/94	97.66	812.24
12/16/94	97.49	812.41
12/16/94	97.56	812.34
12/17/94	97.48	812.42
12/17/94	97.57	812.33
12/18/94	97.57	812.33
12/18/94	97.54	812.36
12/19/94	97.48	812.42
12/19/94	97.54	812.36
12/20/94	97.48	812.42
12/20/94	97.50	812.40
12/21/94	97.49	812.41
12/21/94	97.50	812.40
12/22/94	97.56	812.34
12/22/94	97.49	812.41
12/23/94	97.56	812.34
12/23/94	97.55	812.35
12/24/94	97.55	812.35
12/24/94	97.49	812.41
12/25/94	97.47	812.43
12/25/94	97.49	812.41
12/26/94	97.47	812.43
12/26/94	97.45	812.45
12/27/94	97.46	812.44
12/27/94	97.40	812.50
12/28/94	97.54	812.36
12/28/94	97.46	812.44
12/29/94	97.49	812.41
12/29/94	97.55	812.35
12/30/94	97.49	812.41
12/30/94	97.53	812.37
01/02/95	97.52	812.38
01/02/95	97.49	812.41
01/03/95	97.52	812.38
01/03/95	97.56	812.34
01/04/95	97.58	812.32
01/04/95	97.49	812.41
01/05/95	97.49	812.41
01/05/95	97.28	812.62
01/06/95	97.27	812.63
01/06/95	97.32	812.58
01/07/95	97.24	812.66
01/07/95	97.32	812.58
01/08/95	97.36	812.54
01/08/95	97.27	812.63
01/09/95	97.37	812.53
01/09/95	97.36	812.54
01/10/95	97.36	812.54
01/10/95	97.23	812.67
01/11/95	97.23	812.67
01/11/95	97.14	812.76
01/12/95	97.12	812.78
01/12/95	97.14	812.76
01/13/95	97.14	812.76
01/13/95	97.18	812.72
01/14/95	97.18	812.72
01/14/95	97.18	812.72
01/15/95	97.18	812.72
01/15/95	97.15	812.75
01/16/95	97.07	812.83
01/16/95	97.15	812.75
01/17/95	97.07	812.83
01/17/95	96.94	812.96
01/18/95	96.97	812.93
01/18/95	97.07	812.83
01/19/95	97.12	812.78
01/19/95	97.07	812.83
01/20/95	97.14	812.76
01/20/95	97.12	812.78
01/21/95	97.14	812.76
01/21/95	97.13	812.77
01/22/95	97.13	812.77
01/22/95	97.12	812.78
01/23/95	97.11	812.79
01/23/95	97.12	812.78
01/24/95	97.10	812.80
01/24/95	97.12	812.78
01/25/95	97.12	812.78
01/25/95	97.12	812.78
01/26/95	97.12	812.78
01/26/95	97.05	812.85
01/27/95	97.00	812.90
01/27/95	97.05	812.85
01/28/95	97.10	812.80
01/28/95	97.01	812.89
01/29/95	97.10	812.80
01/29/95	97.11	812.79
01/30/95	97.11	812.79
01/30/95	96.92	812.98
01/31/95	96.92	812.98
01/31/95	96.85	813.05
02/01/95	96.85	813.05
02/01/95	96.85	813.05
02/02/95	96.85	813.05
02/02/95	96.84	813.06
02/03/95	96.84	813.06
02/03/95	96.96	812.94
02/04/95	96.96	812.94
02/04/95	96.97	812.93
02/05/95	96.98	812.92
02/05/95	96.97	812.93
02/06/95	96.98	812.92
02/06/95	96.92	812.98
02/07/95	96.92	812.98
02/07/95	96.97	812.93
02/08/95	96.97	812.93
02/08/95	96.85	813.05
02/09/95	96.64	813.26
02/09/95	96.85	813.05
02/10/95	96.75	813.15
02/10/95	96.67	813.23
02/11/95	96.79	813.11
02/11/95	96.75	813.15
02/12/95	96.83	813.07
02/12/95	96.79	813.11
02/13/95	96.83	813.07
02/13/95	96.83	813.07
02/14/95	96.63	813.27
02/14/95	96.83	813.07
02/15/95	96.62	813.28
02/15/95	96.68	813.22
02/16/95	96.71	813.19
02/16/95	96.68	813.22
02/17/95	96.71	813.19
02/17/95	96.66	813.24
02/18/95	96.59	813.31
02/18/95	96.71	813.19
02/19/95	96.60	813.30
02/19/95	96.73	813.17
02/20/95	96.72	813.18
02/20/95	96.60	813.30
02/21/95	96.72	813.18
02/21/95	96.56	813.34
02/22/95	96.56	813.34
02/22/95	96.54	813.36
02/23/95	96.66	813.24
02/23/95	96.54	813.36
02/24/95	96.64	813.26
02/24/95	96.66	813.24
02/25/95	96.58	813.32
02/25/95	96.65	813.25
02/26/95	96.62	813.28
02/26/95	96.58	813.32
02/27/95	96.62	813.28
02/27/95	96.76	813.14
02/28/95	96.76	813.14
02/28/95	96.79	813.11
03/01/95	96.79	813.11
03/01/95	96.81	813.09
03/02/95	96.81	813.09
03/02/95	96.63	813.27
03/03/95	96.63	813.27
03/03/95	96.58	813.32
03/04/95	96.64	813.26
03/04/95	96.59	813.31
03/05/95	96.59	813.31
03/05/95	96.51	813.39
03/06/95	96.48	813.42
03/06/95	96.51	813.39
03/07/95	96.48	813.42
03/07/95	96.56	813.34
03/08/95	96.56	813.34
03/08/95	96.62	813.28
03/09/95	96.43	813.47
03/09/95	96.61	813.29
03/10/95	96.34	813.56
03/10/95	96.43	813.47
03/11/95	96.34	813.56
03/11/95	96.28	813.62
03/12/95	96.28	813.62
03/12/95	96.25	813.65
03/13/95	96.33	813.57
03/13/95	96.25	813.65
03/14/95	96.43	813.47
03/14/95	96.33	813.57
03/15/95	96.43	813.47
03/15/95	96.43	813.47
03/16/95	96.38	813.52
03/16/95	96.43	813.47
03/17/95	96.39	813.51
03/17/95	96.41	813.49
03/18/95	96.41	813.49
03/18/95	96.33	813.57
03/19/95	96.33	813.57

138-049-22BBA2 **(Continued)** MP Elev (msl,ft)=909.9

West Fargo South Aquifer SI (ft.)=245-250

Date	Depth to Water (ft)	WL Elev (msl, ft)	Date	Depth to Water (ft)	WL Elev (msl, ft)	Date	Depth to Water (ft)	WL Elev (msl, ft)	Date	Depth to Water (ft)	WL Elev (msl, ft)
03/19/95	96.23	813.67	04/09/95	96.07	813.83	04/29/95	95.81	814.09	05/19/95	95.55	814.35
03/20/95	96.22	813.68	04/09/95	96.03	813.87	04/30/95	95.86	814.04	05/20/95	95.57	814.33
03/20/95	96.23	813.67	04/10/95	96.07	813.83	04/30/95	95.99	813.91	05/20/95	95.55	814.35
03/21/95	96.21	813.69	04/10/95	96.10	813.80	04/30/95	95.83	814.07	05/21/95	95.58	814.32
03/21/95	96.22	813.68	04/11/95	96.10	813.80	05/01/95	95.86	814.04	05/21/95	95.56	814.34
03/22/95	96.19	813.71	04/11/95	95.93	813.97	05/01/95	95.88	814.02	05/22/95	95.59	814.31
03/22/95	96.21	813.69	04/12/95	95.93	813.97	05/02/95	95.80	814.10	05/22/95	95.55	814.35
03/23/95	96.18	813.72	04/12/95	95.86	814.04	05/02/95	95.87	814.03	05/23/95	95.59	814.31
03/23/95	96.22	813.68	04/13/95	95.96	813.94	05/03/95	95.79	814.11	05/23/95	95.67	814.23
03/24/95	96.22	813.68	04/13/95	95.92	813.98	05/03/95	95.80	814.10	05/24/95	95.63	814.27
03/24/95	96.22	813.68	04/14/95	95.96	813.94	05/04/95	95.82	814.08	05/24/95	95.72	814.18
03/25/95	96.23	813.67	04/14/95	95.93	813.97	05/04/95	95.79	814.11	05/25/95	95.70	814.20
03/25/95	96.22	813.68	04/15/95	95.87	814.03	05/05/95	95.86	814.04	05/25/95	95.74	814.16
03/26/95	96.23	813.67	04/15/95	95.93	813.97	05/05/95	95.82	814.08	05/26/95	95.78	814.12
03/26/95	96.20	813.70	04/16/95	95.87	814.03	05/06/95	95.86	814.04	05/26/95	95.71	814.19
03/27/95	96.15	813.75	04/16/95	95.90	814.00	05/06/95	95.74	814.16	05/27/95	95.67	814.23
03/27/95	96.20	813.70	04/17/95	95.90	814.00	05/07/95	95.69	814.21	05/27/95	95.71	814.19
03/28/95	96.24	813.66	04/17/95	95.94	813.96	05/07/95	95.74	814.16	05/28/95	95.65	814.25
03/28/95	96.17	813.73	04/18/95	95.76	814.14	05/08/95	95.63	814.27	05/28/95	95.67	814.23
03/29/95	96.24	813.66	04/18/95	95.93	813.97	05/08/95	95.69	814.21	05/28/95	95.81	814.09
03/29/95	96.24	813.66	04/19/95	95.77	814.13	05/09/95	95.63	814.27	05/29/95	95.77	814.13
03/30/95	96.24	813.66	04/19/95	95.85	814.05	05/09/95	95.60	814.30	05/29/95	95.65	814.25
03/30/95	96.23	813.67	04/20/95	95.83	814.07	05/10/95	95.60	814.30	05/30/95	95.81	814.09
03/31/95	96.23	813.67	04/20/95	95.85	814.05	05/10/95	95.63	814.27	05/30/95	95.74	814.16
03/31/95	96.17	813.73	04/21/95	95.81	814.09	05/11/95	95.63	814.27	05/31/95	95.74	814.16
04/01/95	96.17	813.73	04/21/95	95.87	814.03	05/11/95	95.59	814.31	05/31/95	95.71	814.19
04/01/95	96.09	813.81	04/22/95	95.87	814.03	05/12/95	95.59	814.31	06/01/95	95.73	814.17
04/02/95	96.09	813.81	04/22/95	95.94	813.96	05/12/95	95.50	814.40	06/01/95	95.82	814.08
04/02/95	95.98	813.92	04/23/95	95.88	814.02	05/13/95	95.50	814.40	07/01/95	97.36	812.54
04/03/95	95.96	813.94	04/23/95	95.94	813.96	05/13/95	95.42	814.48	08/05/95	97.13	812.77
04/03/95	96.11	813.79	04/24/95	95.85	814.05	05/14/95	95.53	814.37	09/09/95	97.42	812.48
04/04/95	96.16	813.74	04/24/95	95.88	814.02	05/14/95	95.43	814.47	10/27/95	95.96	813.94
04/04/95	96.11	813.79	04/25/95	95.85	814.05	05/15/95	95.55	814.35	11/21/95	95.77	814.13
04/05/95	95.97	813.93	04/25/95	95.82	814.08	05/15/95	95.49	814.41			
04/05/95	96.15	813.75	04/26/95	95.83	814.07	05/16/95	95.46	814.44	06/04/96	91.78	818.12
04/06/95	96.00	813.90	04/26/95	95.82	814.08	05/16/95	95.51	814.39	06/30/96	92.79	817.11
04/06/95	95.97	813.93	04/27/95	95.82	814.08	05/17/95	95.51	814.39	07/28/96	94.75	815.15
04/07/95	96.01	813.89	04/27/95	95.81	814.09	05/17/95	95.56	814.34	08/24/96	96.05	813.85
04/07/95	96.00	813.90	04/28/95	95.81	814.09	05/18/95	95.56	814.34	10/05/96	97.14	812.76
04/08/95	96.01	813.89	04/28/95	95.81	814.09	05/18/95	95.56	814.34	11/02/96	97.21	812.69
04/08/95	96.03	813.87	04/29/95	95.83	814.07	05/19/95	95.56	814.34			

138-049-27BAB MP Elev (msl,ft)=909

West Fargo South Aquifer SI (ft.)=188-193

Date	Depth to Water (ft)	WL Elev (msl, ft)
03/17/83	56.12	852.88
04/18/83	56.15	852.85
05/20/83	56.61	852.39
05/26/83	56.67	852.33
06/02/83	56.82	852.18
06/21/83	57.41	851.59
07/28/83	58.33	850.67
08/18/83	60.34	848.66
09/15/83	62.83	846.17
10/12/83	63.97	845.03
11/08/83	64.79	844.21
12/15/83	65.33	843.67
04/11/84	69.64	839.36
05/16/84	71.28	837.72
06/22/84	73.02	835.98
07/12/84	73.92	835.08
08/09/84	76.05	832.95
10/10/84	77.85	831.15
11/07/84	77.13	831.87
12/05/84	77.05	831.95
04/10/85	76.06	832.94
05/05/85	76.38	832.62
06/08/85	76.75	832.25
07/08/85	78.22	830.78
08/17/85	80.06	828.94
09/22/85	78.91	830.09
10/26/85	78.17	830.83
12/07/85	77.63	831.37
05/10/86	77.54	831.46
06/08/86	78.98	830.02
07/05/86	80.33	828.67
08/01/86	84.70	824.30
08/30/86	80.95	828.05
10/10/86	80.82	828.18
11/01/86	81.00	828.00
12/06/86	80.78	828.22
04/25/87	78.63	830.37
05/30/87	80.80	828.20
06/27/87	82.74	826.26
08/01/87	84.45	824.55
08/29/87	85.26	823.74
09/26/87	84.68	824.32
10/31/87	84.90	824.10
11/28/87	83.75	825.25
12/19/87	83.48	825.52
04/02/88	82.83	826.17
04/30/88	83.20	825.80
05/27/88	84.32	824.68
06/24/88	86.09	822.91
07/22/88	87.46	821.54
08/20/88	88.42	820.58
09/17/88	89.15	819.85
10/15/88	88.58	820.42
11/05/88	87.91	821.09
12/10/88	86.80	822.20
04/22/89	85.03	823.97
05/12/89	85.24	823.76
06/03/89	85.62	823.38
06/30/89	86.35	822.65
07/30/89	88.52	820.48
09/09/89	89.11	819.89
09/30/89	88.21	820.79
10/26/89	87.59	821.41
11/19/89	87.27	821.73
05/05/90	83.15	825.85
05/28/90	83.56	825.44
06/29/90	83.94	825.06
08/03/90	85.50	823.50
09/01/90	87.35	821.65
09/29/90	88.17	820.83
10/27/90	87.72	821.28
11/17/90	87.27	821.73
12/08/90	86.39	822.61
03/29/91	85.16	823.84
05/10/91	84.96	824.04
06/01/91	85.42	823.58
07/13/91	86.12	822.88
08/10/91	86.74	822.26
08/31/91	87.85	821.15
09/26/91	88.03	820.97
09/28/91	88.01	820.99
10/20/91	88.39	820.61
11/17/91	88.69	820.31
12/20/91	88.89	820.11
04/17/92	88.47	820.53
05/20/92	89.26	819.74
06/13/92	89.81	819.19
07/26/92	90.02	818.98
08/27/92	90.36	818.64
09/24/92	90.19	818.81
10/17/92	90.50	818.50
11/11/92	90.16	818.84
12/06/92	89.80	819.20
05/01/93	87.98	821.02
06/05/93	89.09	819.91
08/05/93	90.94	818.06
08/28/93	91.52	817.48
09/25/93	92.04	816.96
10/18/93	92.36	816.64
11/12/93	92.38	816.62
04/16/94	92.03	816.97
05/15/94	92.18	816.82
06/11/94	92.69	816.31
07/24/94	93.80	815.20
08/20/94	94.19	814.81
09/24/94	94.36	814.64
10/28/94	94.25	814.75
11/26/94	94.71	814.29
04/30/95	93.50	815.50
05/28/95	93.42	815.58
07/01/95	94.97	814.03
08/05/95	94.95	814.05
09/09/95	95.18	813.82
10/27/95	93.81	815.19
11/21/95	93.52	815.48
06/04/96	90.03	818.97
06/30/96	91.09	817.91
07/28/96	92.89	816.11
08/24/96	93.97	815.03
10/05/96	94.96	814.04
11/02/96	94.92	814.08

139-048-06CCD MP Elev (msl,ft)=896.4

Fargo Aquifer SI (ft.)=0-180

Date	Depth to Water (ft)	WL Elev (msl, ft)	Date	Depth to Water (ft)	WL Elev (msl, ft)	Date	Depth to Water (ft)	WL Elev (msl, ft)	Date	Depth to Water (ft)	WL Elev (msl, ft)
07/03/40	23.01	873.39	11/19/40	25.42	870.98	02/06/41	24.19	872.21	04/27/41	23.76	872.64
07/08/40	23.04	873.36	11/20/40	25.40	871.00	02/07/41	24.19	872.21	04/28/41	23.74	872.66
07/09/40	23.05	873.35	11/21/40	25.39	871.01	02/08/41	24.19	872.21	04/29/41	23.73	872.67
07/10/40	23.05	873.35	11/22/40	25.35	871.05	02/09/41	24.18	872.22	04/30/41	23.73	872.67
07/11/40	23.06	873.34	11/23/40	25.35	871.05	02/10/41	24.17	872.23	05/01/41	23.72	872.68
07/12/40	23.09	873.31	11/24/40	25.35	871.05	02/11/41	24.16	872.24	05/02/41	23.71	872.69
07/13/40	23.10	873.30	11/25/40	25.34	871.06	02/12/41	24.15	872.25	05/03/41	23.70	872.70
07/15/40	23.17	873.23	11/26/40	25.30	871.10	02/13/41	24.12	872.28	05/04/41	23.70	872.70
07/16/40	23.28	873.12	11/27/40	25.26	871.14	02/14/41	24.12	872.28	05/05/41	23.69	872.71
07/17/40	23.34	873.06	11/28/40	25.24	871.16	02/15/41	24.12	872.28	05/06/41	23.67	872.73
07/18/40	23.41	872.99	11/29/40	25.19	871.21	02/16/41	24.12	872.28	05/07/41	23.65	872.75
07/20/40	23.67	872.73	11/30/40	25.15	871.25	02/17/41	24.10	872.30	05/08/41	23.67	872.73
07/22/40	23.94	872.46	12/01/40	25.14	871.26	02/18/41	24.13	872.27	05/09/41	23.72	872.68
07/24/40	24.21	872.19	12/02/40	25.14	871.26	02/19/41	24.16	872.24	05/10/41	23.73	872.67
07/26/40	24.49	871.91	12/03/40	25.14	871.26	02/20/41	24.17	872.23	05/11/41	23.75	872.65
07/29/40	24.82	871.58	12/04/40	25.11	871.29	02/21/41	24.17	872.23	05/12/41	23.75	872.65
07/31/40	25.05	871.35	12/05/40	25.05	871.35	02/22/41	24.16	872.24	05/13/41	23.74	872.66
08/03/40	25.35	871.05	12/06/40	25.03	871.37	02/23/41	24.15	872.25	05/14/41	23.69	872.71
08/10/40	26.04	870.36	12/07/40	24.97	871.43	02/24/41	24.12	872.28	05/15/41	23.68	872.72
08/17/40	26.67	869.73	12/08/40	24.97	871.43	02/25/41	24.10	872.30	05/16/41	23.71	872.69
08/24/40	26.89	869.51	12/09/40	24.96	871.44	02/26/41	24.10	872.30	05/17/41	23.73	872.67
08/31/40	27.60	868.80	12/10/40	24.93	871.47	02/27/41	24.08	872.32	05/18/41	23.73	872.67
09/07/40	28.03	868.37	12/11/40	24.94	871.46	02/28/41	24.08	872.32	05/19/41	23.70	872.70
09/14/40	28.40	868.00	12/12/40	24.95	871.45	03/01/41	24.07	872.33	05/20/41	23.73	872.67
09/16/40	28.49	867.91	12/13/40	24.97	871.43	03/02/41	24.04	872.36	05/21/41	23.74	872.66
09/17/40	28.53	867.87	12/14/40	24.97	871.43	03/03/41	24.02	872.38	05/22/41	23.76	872.64
09/18/40	28.56	867.84	12/15/40	24.96	871.44	03/04/41	24.04	872.36	05/23/41	23.79	872.61
09/19/40	28.56	867.84	12/16/40	24.92	871.48	03/05/41	24.05	872.35	05/24/41	23.80	872.60
09/20/40	28.59	867.81	12/17/40	24.88	871.52	03/06/41	24.07	872.33	05/25/41	23.78	872.62
09/21/40	28.55	867.85	12/18/40	24.88	871.52	03/07/41	24.06	872.34	05/26/41	23.74	872.66
09/25/40	28.27	868.13	12/19/40	24.85	871.55	03/08/41	24.06	872.34	05/27/41	23.72	872.68
09/26/40	28.24	868.16	12/20/40	24.81	871.59	03/09/41	24.01	872.39	05/28/41	23.71	872.69
09/27/40	28.15	868.25	12/21/40	24.80	871.60	03/10/41	23.99	872.41	05/29/41	23.72	872.68
09/28/40	28.05	868.35	12/22/40	24.77	871.63	03/11/41	24.00	872.40	05/30/41	23.72	872.68
09/29/40	27.98	868.42	12/23/40	24.76	871.64	03/12/41	24.03	872.37	05/31/41	23.72	872.68
09/30/40	27.93	868.47	12/24/40	24.71	871.69	03/13/41	24.06	872.34	06/01/41	23.70	872.70
10/01/40	27.84	868.56	12/25/40	24.65	871.75	03/14/41	24.06	872.34	06/02/41	23.70	872.70
10/02/40	27.75	868.65	12/26/40	24.62	871.78	03/15/41	24.03	872.37	06/03/41	23.72	872.68
10/03/40	27.66	868.74	12/27/40	24.62	871.78	03/16/41	23.97	872.43	06/04/41	23.76	872.64
10/04/40	27.56	868.84	12/28/40	24.60	871.80	03/17/41	24.00	872.40	06/05/41	23.85	872.55
10/05/40	27.44	868.96	12/29/40	24.58	871.82	03/18/41	24.00	872.40	06/06/41	23.91	872.49
10/06/40	27.41	868.99	12/30/40	24.58	871.82	03/19/41	23.99	872.41	06/07/41	24.05	872.35
10/07/40	27.37	869.03	12/31/40	24.58	871.82	03/20/41	23.98	872.42	06/08/41	24.27	872.13
10/08/40	27.30	869.10				03/21/41	24.00	872.40	06/09/41	24.49	871.91
10/09/40	27.24	869.16	01/01/41	24.57	871.83	03/22/41	24.00	872.40	06/10/41	24.71	871.69
10/10/40	27.16	869.24	01/02/41	24.57	871.83	03/23/41	23.99	872.41	06/11/41	24.92	871.48
10/11/40	27.11	869.29	01/03/41	24.53	871.87	03/24/41	23.99	872.41	06/12/41	25.16	871.24
10/12/40	27.03	869.37	01/04/41	24.50	871.90	03/25/41	23.99	872.41	06/13/41	25.41	870.99
10/13/40	27.00	869.40	01/05/41	24.52	871.88	03/26/41	23.98	872.42	06/14/41	25.68	870.72
10/14/40	26.94	869.46	01/06/41	24.52	871.88	03/27/41	23.96	872.44	06/15/41	25.95	870.45
10/15/40	26.89	869.51	01/07/41	24.52	871.88	03/28/41	23.96	872.44	06/16/41	26.21	870.19
10/16/40	26.82	869.58	01/08/41	24.50	871.90	03/29/41	23.96	872.44	06/17/41	26.44	869.96
10/17/40	26.76	869.64	01/09/41	24.51	871.89	03/30/41	23.93	872.47	06/18/41	26.68	869.72
10/18/40	26.72	869.68	01/10/41	24.50	871.90	03/31/41	23.92	872.48	06/19/41	26.92	869.48
10/19/40	26.64	869.76	01/11/41	24.47	871.93	04/01/41	23.92	872.48	06/20/41	27.18	869.22
10/20/40	26.58	869.82	01/12/41	24.45	871.95	04/02/41	23.92	872.48	06/21/41	27.44	868.96
10/21/40	26.53	869.87	01/13/41	24.45	871.95	04/03/41	23.92	872.48	06/22/41	27.68	868.72
10/22/40	26.47	869.93	01/14/41	24.44	871.96	04/04/41	23.92	872.48	06/23/41	27.89	868.51
10/23/40	26.42	869.98	01/15/41	24.41	871.99	04/05/41	23.92	872.48	06/24/41	28.09	868.31
10/24/40	26.39	870.01	01/16/41	24.39	872.01	04/06/41	23.89	872.51	06/25/41	28.29	868.11
10/25/40	26.35	870.05	01/17/41	24.37	872.03	04/07/41	23.87	872.53	06/26/41	28.49	867.91
10/26/40	26.30	870.10	01/18/41	24.39	872.01	04/08/41	23.86	872.54	06/27/41	28.69	867.71
10/27/40	26.27	870.13	01/19/41	24.39	872.01	04/09/41	23.85	872.55	06/28/41	28.89	867.51
10/28/40	26.21	870.19	01/20/41	24.38	872.02	04/10/41	23.84	872.56	06/29/41	29.07	867.33
10/29/40	26.14	870.26	01/21/41	24.36	872.04	04/11/41	23.84	872.56	06/30/41	29.25	867.15
10/30/40	26.10	870.30	01/22/41	24.35	872.05	04/12/41	23.82	872.58	07/01/41	29.43	866.97
10/31/40	26.08	870.32	01/23/41	24.35	872.05	04/13/41	23.89	872.51	07/02/41	29.62	866.78
11/01/40	26.02	870.38	01/24/41	24.35	872.05	04/14/41	23.86	872.54	07/03/41	29.79	866.61
11/02/40	25.97	870.43	01/25/41	24.32	872.08	04/15/41	23.83	872.57	07/04/41	29.95	866.45
11/03/40	25.92	870.48	01/26/41	24.32	872.08	04/16/41	23.83	872.57	07/05/41	30.07	866.33
11/04/40	25.89	870.51	01/27/41	24.31	872.09	04/17/41	23.83	872.57	07/06/41	30.19	866.21
11/05/40	25.85	870.55	01/28/41	24.31	872.09	04/18/41	23.82	872.58	07/07/41	30.33	866.07
11/06/40	25.85	870.55	01/29/41	24.29	872.11	04/19/41	23.70	872.70	07/08/41	30.45	865.95
11/07/40	25.83	870.57	01/30/41	24.26	872.14	04/20/41	23.70	872.70	07/09/41	30.56	865.84
11/08/40	25.80	870.60	01/31/41	24.24	872.16	04/21/41	23.73	872.67	07/10/41	30.71	865.69
11/09/40	25.75	870.65	02/01/41	24.23	872.17	04/22/41	23.73	872.67	07/11/41	30.88	865.52
11/12/40	25.59	870.81	02/02/41	24.24	872.16	04/23/41	23.75	872.65	07/12/41	31.02	865.38
11/16/40	25.48	870.92	02/03/41	24.24	872.16	04/24/41	23.76	872.64	07/13/41	31.15	865.25
11/17/40	25.47	870.93	02/04/41	24.24	872.16	04/25/41	23.76	872.64	07/14/41	31.26	865.14
11/18/40	25.46	870.94	02/05/41	24.23	872.17	04/26/41	23.76	872.64	07/15/41	31.36	865.04

139-048-06CCD **(Continued)** MP Elev (msl,ft)=896.4

Fargo Aquifer SI (ft.)=0-180

Date	Depth to Water (ft)	WL Elev (msl, ft)	Date	Depth to Water (ft)	WL Elev (msl, ft)	Date	Depth to Water (ft)	WL Elev (msl, ft)	Date	Depth to Water (ft)	WL Elev (msl, ft)
07/16/41	31.46	864.94	10/07/41	36.87	859.53	12/30/41	28.68	867.72	03/19/42	26.64	869.76
07/17/41	31.55	864.85	10/08/41	36.66	859.74	12/31/41	28.65	867.75	03/20/42	26.63	869.77
07/18/41	31.67	864.73	10/09/41	36.46	859.94				03/21/42	26.61	869.79
07/19/41	31.81	864.59	10/10/41	36.28	860.12	01/01/42	28.62	867.78	03/22/42	26.60	869.80
07/20/41	31.91	864.49	10/11/41	36.09	860.31	01/02/42	28.56	867.84	03/23/42	26.60	869.80
07/21/41	32.01	864.39	10/12/41	35.91	860.49	01/03/42	28.48	867.92	03/24/42	26.58	869.82
07/22/41	32.11	864.29	10/13/41	35.70	860.70	01/04/42	28.46	867.94	03/25/42	26.56	869.84
07/23/41	32.22	864.18	10/14/41	35.49	860.91	01/05/42	28.44	867.96	03/26/42	26.51	869.89
07/24/41	32.34	864.06	10/15/41	35.32	861.08	01/06/42	28.40	868.00	03/27/42	26.46	869.94
07/25/41	32.43	863.97	10/16/41	35.16	861.24	01/07/42	28.38	868.02	03/28/42	26.43	869.97
07/26/41	32.47	863.93	10/17/41	34.96	861.44	01/08/42	28.35	868.05	03/29/42	26.42	869.98
07/30/41	32.92	863.48	10/18/41	34.76	861.64	01/09/42	28.29	868.11	03/30/42	26.43	869.97
07/31/41	32.99	863.41	10/19/41	34.59	861.81	01/10/42	28.28	868.12	03/31/42	26.43	869.97
08/01/41	33.06	863.34	10/20/41	34.42	861.98	01/11/42	28.22	868.18	04/01/42	26.41	869.99
08/02/41	33.11	863.29	10/21/41	34.26	862.14	01/12/42	28.16	868.24	04/02/42	26.36	870.04
08/03/41	33.19	863.21	10/22/41	34.08	862.32	01/13/42	28.15	868.25	04/03/42	26.34	870.06
08/04/41	33.28	863.12	10/23/41	33.92	862.48	01/14/42	28.10	868.30	04/04/42	26.32	870.08
08/05/41	33.34	863.06	10/24/41	33.79	862.61	01/15/42	28.10	868.30	04/05/42	26.32	870.08
08/06/41	33.39	863.01	10/25/41	33.64	862.76	01/16/42	28.07	868.33	04/06/42	26.31	870.09
08/07/41	33.45	862.95	10/26/41	33.47	862.93	01/17/42	28.02	868.38	04/07/42	26.31	870.09
08/08/41	33.53	862.87	10/27/41	33.31	863.09	01/18/42	27.98	868.42	04/08/42	26.31	870.09
08/09/41	33.61	862.79	10/28/41	33.19	863.21	01/19/42	27.96	868.44	04/11/42	26.27	870.13
08/10/41	33.65	862.75	10/29/41	33.08	863.32	01/20/42	27.94	868.46	04/12/42	26.26	870.14
08/11/41	33.70	862.70	10/30/41	32.94	863.46	01/21/42	27.93	868.47	04/13/42	26.23	870.17
08/12/41	33.80	862.60	10/31/41	32.84	863.56	01/22/42	27.89	868.51	04/14/42	26.21	870.19
08/13/41	33.87	862.53	11/01/41	32.70	863.70	01/23/42	27.85	868.55	04/15/42	26.18	870.22
08/14/41	33.94	862.46	11/02/41	32.53	863.87	01/24/42	27.81	868.59	04/16/42	26.18	870.22
08/15/41	34.04	862.36	11/03/41	32.41	863.99	01/25/42	27.79	868.61	04/17/42	26.20	870.20
08/16/41	34.16	862.24	11/04/41	32.30	864.10	01/26/42	27.75	868.65	04/18/42	26.20	870.20
08/17/41	34.23	862.17	11/05/41	32.21	864.19	01/27/42	27.73	868.67	04/19/42	26.21	870.19
08/18/41	34.32	862.08	11/06/41	32.13	864.27	01/28/42	27.72	868.68	04/20/42	26.21	870.19
08/19/41	34.43	861.97	11/07/41	32.02	864.38	01/29/42	27.69	868.71	04/21/42	26.20	870.20
08/20/41	34.51	861.89	11/08/41	31.92	864.48	01/30/42	27.65	868.75	04/22/42	26.19	870.21
08/21/41	34.60	861.80	11/09/41	31.83	864.57	01/31/42	27.64	868.76	04/23/42	26.14	870.26
08/22/41	34.71	861.69	11/10/41	31.73	864.67	02/01/42	27.62	868.78	04/24/42	26.11	870.29
08/23/41	34.79	861.61	11/11/41	31.66	864.74	02/02/42	27.60	868.80	04/25/42	26.11	870.29
08/24/41	34.87	861.53	11/12/41	31.56	864.84	02/03/42	27.57	868.83	04/26/42	26.09	870.31
08/25/41	34.98	861.42	11/13/41	31.42	864.98	02/04/42	27.53	868.87	04/27/42	26.08	870.32
08/26/41	35.10	861.30	11/14/41	31.35	865.05	02/05/42	27.48	868.92	04/28/42	26.06	870.34
08/27/41	35.22	861.18	11/15/41	31.24	865.16	02/06/42	27.45	868.95	04/29/42	26.01	870.39
08/28/41	35.29	861.11	11/16/41	31.17	865.23	02/07/42	27.45	868.95	04/30/42	26.00	870.40
08/29/41	35.36	861.04	11/17/41	31.08	865.32	02/08/42	27.44	868.96	05/01/42	25.95	870.45
08/30/41	35.46	860.94	11/18/41	30.99	865.41	02/09/42	27.43	868.97	05/02/42	25.89	870.51
08/31/41	35.56	860.84	11/19/41	30.90	865.50	02/10/42	27.40	869.00	05/03/42	25.85	870.55
09/01/41	35.65	860.75	11/20/41	30.82	865.58	02/11/42	27.38	869.02	05/04/42	25.86	870.54
09/02/41	35.72	860.68	11/21/41	30.77	865.63	02/12/42	27.35	869.05	05/05/42	25.87	870.53
09/03/41	35.80	860.60	11/22/41	30.69	865.71	02/13/42	27.33	869.07	05/06/42	25.87	870.53
09/04/41	35.85	860.55	11/23/41	30.64	865.76	02/14/42	27.31	869.09	05/07/42	25.87	870.53
09/05/41	35.92	860.48	11/24/41	30.57	865.83	02/15/42	27.29	869.11	05/08/42	25.86	870.54
09/06/41	36.03	860.37	11/25/41	30.49	865.91	02/16/42	27.24	869.16	05/09/42	25.85	870.55
09/07/41	36.11	860.29	11/26/41	30.40	866.00	02/17/42	27.22	869.18	05/10/42	25.85	870.55
09/08/41	36.18	860.22	11/27/41	30.34	866.06	02/18/42	27.22	869.18	05/11/42	25.85	870.55
09/09/41	36.25	860.15	11/28/41	30.30	866.10	02/19/42	27.20	869.20	05/12/42	25.82	870.58
09/10/41	36.35	860.05	11/29/41	30.23	866.17	02/20/42	27.18	869.22	05/13/42	25.80	870.60
09/11/41	36.41	859.99	11/30/41	30.20	866.20	02/21/42	27.16	869.24	05/14/42	25.77	870.63
09/12/41	36.44	859.96	12/01/41	30.13	866.27	02/22/42	27.15	869.25	05/15/42	25.78	870.62
09/13/41	36.47	859.93	12/02/41	30.06	866.34	02/23/42	27.14	869.26	05/16/42	25.78	870.62
09/14/41	36.52	859.88	12/03/41	29.97	866.43	02/24/42	27.12	869.28	05/17/42	25.77	870.63
09/15/41	36.59	859.81	12/04/41	29.87	866.53	02/25/42	27.11	869.29	05/18/42	25.77	870.63
09/16/41	36.66	859.74	12/05/41	29.81	866.59	02/26/42	27.08	869.32	05/19/42	25.75	870.65
09/17/41	36.74	859.66	12/06/41	29.79	866.61	02/27/42	27.06	869.34	05/20/42	25.76	870.64
09/18/41	36.78	859.62	12/07/41	29.74	866.66	02/28/42	27.04	869.36	05/21/42	25.76	870.64
09/19/41	36.82	859.58	12/08/41	29.67	866.73	03/01/42	27.02	869.38	05/22/42	25.76	870.64
09/20/41	36.87	859.53	12/13/41	29.40	867.00	03/02/42	26.98	869.42	05/23/42	25.76	870.64
09/21/41	36.93	859.47	12/14/41	29.37	867.03	03/03/42	26.96	869.44	05/24/42	25.74	870.66
09/22/41	37.02	859.38	12/15/41	29.31	867.09	03/04/42	26.91	869.49	05/25/42	25.73	870.67
09/23/41	37.06	859.34	12/16/41	29.24	867.16	03/05/42	26.89	869.51	05/26/42	25.70	870.70
09/24/41	37.08	859.32	12/17/41	29.20	867.20	03/06/42	26.87	869.53	05/27/42	25.69	870.71
09/25/41	37.12	859.28	12/18/41	29.12	867.28	03/07/42	26.83	869.57	05/28/42	25.66	870.74
09/26/41	37.14	859.26	12/19/41	29.08	867.32	03/08/42	26.82	869.58	05/29/42	25.65	870.75
09/27/41	37.20	859.20	12/20/41	29.06	867.34	03/09/42	26.82	869.58	05/30/42	25.65	870.75
09/28/41	37.27	859.13	12/21/41	29.02	867.38	03/10/42	26.81	869.59	05/31/42	25.65	870.75
09/29/41	37.31	859.09	12/22/41	28.95	867.45	03/11/42	26.77	869.63	06/01/42	25.65	870.75
09/30/41	37.33	859.07	12/23/41	28.92	867.48	03/12/42	26.76	869.64	06/02/42	25.64	870.76
10/01/41	37.38	859.02	12/24/41	28.87	867.53	03/13/42	26.76	869.64	06/03/42	25.64	870.76
10/02/41	37.39	859.01	12/25/41	28.84	867.56	03/14/42	26.75	869.65	06/04/42	25.62	870.78
10/03/41	37.39	859.01	12/26/41	28.81	867.59	03/15/42	26.74	869.66	06/05/42	25.62	870.78
10/04/41	37.32	859.08	12/27/41	28.78	867.62	03/16/42	26.71	869.69	06/06/42	25.57	870.83
10/05/41	37.21	859.19	12/28/41	28.78	867.62	03/17/42	26.68	869.72	06/07/42	25.54	870.86
10/06/41	37.07	859.33	12/29/41	28.75	867.65	03/18/42	26.65	869.75	06/08/42	25.54	870.86

139-048-06CCD **(Continued)** MP Elev (msl,ft)=896.4

Fargo Aquifer SI (ft.)=0-180

Date	Depth to Water (ft)	WL Elev (msl, ft)	Date	Depth to Water (ft)	WL Elev (msl, ft)	Date	Depth to Water (ft)	WL Elev (msl, ft)	Date	Depth to Water (ft)	WL Elev (msl, ft)
06/09/42	25.54	870.86	10/16/42	27.41	868.99	01/10/43	25.94	870.46	04/02/43	25.51	870.89
06/10/42	25.53	870.87	10/17/42	27.39	869.01	01/11/43	25.92	870.48	04/03/43	25.51	870.89
06/11/42	25.50	870.90	10/18/42	27.37	869.03	01/12/43	25.93	870.47	04/04/43	25.46	870.94
06/12/42	25.49	870.91	10/19/42	27.34	869.06	01/13/43	25.94	870.46	04/05/43	25.46	870.94
06/13/42	25.50	870.90	10/20/42	27.28	869.12	01/14/43	25.91	870.49	04/06/43	25.46	870.94
06/14/42	25.50	870.90	10/21/42	27.22	869.18	01/15/43	25.86	870.54	04/07/43	25.40	871.00
06/15/42	25.50	870.90	10/22/42	27.19	869.21	01/16/43	25.86	870.54	04/08/43	25.42	870.98
06/16/42	25.49	870.91	10/23/42	27.14	869.26	01/17/43	25.90	870.50	04/09/43	25.51	870.89
06/17/42	25.47	870.93	10/24/42	27.12	869.28	01/18/43	25.91	870.49	04/10/43	25.63	870.77
06/18/42	25.46	870.94	10/25/42	27.11	869.29	01/19/43	25.91	870.49	04/11/43	25.75	870.65
06/19/42	25.45	870.95	10/26/42	27.10	869.30	01/20/43	25.91	870.49	04/12/43	25.88	870.52
06/20/42	25.46	870.94	10/27/42	27.08	869.32	01/21/43	25.91	870.49	04/13/43	26.03	870.37
07/03/42	25.41	870.99	10/28/42	27.06	869.34	01/22/43	25.86	870.54	04/14/43	26.15	870.25
07/08/42	25.40	871.00	10/29/42	27.03	869.37	01/23/43	25.83	870.57	04/15/43	26.19	870.21
07/15/42	25.40	871.00	10/30/42	26.99	869.41	01/24/43	25.83	870.57	04/16/43	26.26	870.14
07/19/42	25.45	870.95	10/31/42	26.94	869.46	01/25/43	25.84	870.56	04/17/43	26.32	870.08
07/22/42	25.45	870.95	11/01/42	26.93	869.47	01/26/43	25.85	870.55	04/18/43	26.38	870.02
08/01/42	26.13	870.27	11/02/42	26.91	869.49	01/27/43	25.85	870.55	04/19/43	26.40	870.00
08/02/42	26.28	870.12	11/03/42	26.92	869.48	01/28/43	25.83	870.57	04/20/43	26.40	870.00
08/03/42	26.41	869.99	11/04/42	26.91	869.49	01/29/43	25.82	870.58	04/21/43	26.38	870.02
08/04/42	26.55	869.85	11/05/42	26.85	869.55	01/30/43	25.80	870.60	04/22/43	26.36	870.04
08/05/42	26.66	869.74	11/06/42	26.87	869.53	02/02/43	25.82	870.58	04/23/43	26.36	870.04
08/06/42	26.79	869.61	11/07/42	26.87	869.53	02/03/43	25.82	870.58	04/24/43	26.36	870.04
08/07/42	26.92	869.48	11/08/42	26.87	869.53	02/04/43	25.78	870.62	04/25/43	26.35	870.05
08/08/42	27.03	869.37	11/09/42	26.82	869.58	02/05/43	25.72	870.68	04/26/43	26.36	870.04
08/09/42	27.17	869.23	11/10/42	26.78	869.62	02/06/43	25.68	870.72	04/27/43	26.34	870.06
08/10/42	27.30	869.10	11/11/42	26.78	869.62	02/07/43	25.69	870.71	04/28/43	26.34	870.06
08/11/42	27.42	868.98	11/12/42	26.77	869.63	02/08/43	25.69	870.71	04/29/43	26.35	870.05
08/12/42	27.52	868.88	11/13/42	26.74	869.66	02/09/43	25.68	870.72	04/30/43	26.32	870.08
08/13/42	27.61	868.79	11/14/42	26.74	869.66	02/10/43	25.67	870.73	05/01/43	26.32	870.08
08/14/42	27.77	868.63	11/15/42	26.68	869.72	02/11/43	25.67	870.73	05/02/43	26.28	870.12
08/15/42	27.84	868.56	11/16/42	26.61	869.79	02/12/43	25.68	870.72	05/03/43	26.24	870.16
08/16/42	27.95	868.45	11/17/42	26.60	869.80	02/13/43	25.70	870.70	05/04/43	26.24	870.16
08/17/42	28.06	868.34	11/18/42	26.62	869.78	02/14/43	25.71	870.69	05/05/43	26.22	870.18
08/18/42	28.16	868.24	11/19/42	26.62	869.78	02/15/43	25.71	870.69	05/06/43	26.16	870.24
08/19/42	28.25	868.15	11/20/42	26.62	869.78	02/16/43	25.71	870.69	05/07/43	26.17	870.23
08/20/42	28.33	868.07	11/21/42	26.64	869.76	02/17/43	25.67	870.73	05/08/43	26.18	870.22
08/21/42	28.42	867.98	11/22/42	26.64	869.76	02/18/43	25.67	870.73	05/09/43	26.18	870.22
08/22/42	28.57	867.83	11/23/42	26.63	869.77	02/19/43	25.65	870.75	05/10/43	26.17	870.23
08/23/42	28.68	867.72	11/24/42	26.58	869.82	02/20/43	25.61	870.79	05/11/43	26.16	870.24
08/29/42	29.12	867.28	11/25/42	26.51	869.89	02/21/43	25.62	870.78	05/12/43	26.15	870.25
08/30/42	29.12	867.28	11/26/42	26.51	869.89	02/22/43	25.60	870.80	05/13/43	26.14	870.26
08/31/42	29.17	867.23	11/27/42	26.51	869.89	02/23/43	25.59	870.81	05/14/43	26.13	870.27
09/01/42	29.22	867.18	12/05/42	26.38	870.02	02/24/43	25.64	870.76	05/15/43	26.13	870.27
09/02/42	29.28	867.12	12/06/42	26.38	870.02	02/25/43	25.65	870.75	05/16/43	26.08	870.32
09/03/42	29.30	867.10	12/07/42	26.38	870.02	02/26/43	25.64	870.76	05/17/43	26.05	870.35
09/04/42	29.29	867.11	12/08/42	26.37	870.03	02/27/43	25.64	870.76	05/18/43	26.05	870.35
09/05/42	29.27	867.13	12/09/42	26.36	870.04	02/28/43	25.60	870.80	05/19/43	26.05	870.35
09/06/42	29.25	867.15	12/10/42	26.35	870.05	03/01/43	25.63	870.77	05/20/43	26.04	870.36
09/07/42	29.21	867.19	12/11/42	26.34	870.06	03/02/43	25.65	870.75	05/21/43	26.03	870.37
09/08/42	29.16	867.24	12/12/42	26.33	870.07	03/03/43	25.65	870.75	05/22/43	26.03	870.37
09/09/42	29.11	867.29	12/13/42	26.32	870.08	03/04/43	25.61	870.79	05/23/43	26.00	870.40
09/10/42	29.05	867.35	12/14/42	26.31	870.09	03/05/43	25.61	870.79	05/24/43	25.95	870.45
09/11/42	28.98	867.42	12/15/42	26.29	870.11	03/06/43	25.62	870.78	05/25/43	25.89	870.51
09/12/42	28.93	867.47	12/16/42	26.28	870.12	03/07/43	25.63	870.77	05/26/43	25.84	870.56
09/13/42	28.88	867.52	12/17/42	26.26	870.14	03/08/43	25.63	870.77	05/27/43	25.84	870.56
09/14/42	28.80	867.60	12/18/42	26.26	870.14	03/09/43	25.61	870.79	05/28/43	25.84	870.56
09/15/42	28.72	867.68	12/19/42	26.27	870.13	03/10/43	25.61	870.79	05/29/43	25.83	870.57
09/16/42	28.64	867.76	12/20/42	26.27	870.13	03/11/43	25.60	870.80	05/30/43	25.83	870.57
09/17/42	28.59	867.81	12/21/42	26.25	870.15	03/12/43	25.57	870.83	05/31/43	25.82	870.58
09/18/42	28.53	867.87	12/22/42	26.17	870.23	03/13/43	25.58	870.82	06/01/43	25.77	870.63
09/19/42	28.49	867.91	12/23/42	26.13	870.27	03/14/43	25.58	870.82	06/02/43	25.75	870.65
09/20/42	28.46	867.94	12/24/42	26.13	870.27	03/15/43	25.57	870.83	06/03/43	25.73	870.67
09/21/42	28.41	867.99	12/25/42	26.13	870.27	03/16/43	25.53	870.87	06/04/43	25.66	870.74
09/22/42	28.34	868.06	12/26/42	26.12	870.28	03/17/43	25.44	870.96	06/05/43	25.70	870.70
09/23/42	28.27	868.13	12/27/42	26.14	870.26	03/18/43	25.43	870.97	06/06/43	25.71	870.69
09/24/42	28.22	868.18	12/28/42	26.14	870.26	03/19/43	25.44	870.96	06/07/43	25.72	870.68
09/25/42	28.20	868.20	12/29/42	26.11	870.29	03/20/43	25.44	870.96	06/08/43	25.72	870.68
09/26/42	28.14	868.26	12/30/42	26.09	870.31	03/21/43	25.47	870.93	06/09/43	25.71	870.69
10/05/42	27.68	868.72	12/31/42	26.09	870.31	03/22/43	25.47	870.93	06/10/43	25.70	870.70
10/06/42	27.67	868.73				03/23/43	25.46	870.94	06/11/43	25.69	870.71
10/07/42	27.65	868.75	01/01/43	26.05	870.35	03/24/43	25.44	870.96	06/12/43	25.64	870.76
10/08/42	27.60	868.80	01/02/43	26.05	870.35	03/25/43	25.45	870.95	06/13/43	25.63	870.77
10/09/42	27.60	868.80	01/03/43	26.06	870.34	03/26/43	25.49	870.91	06/14/43	25.63	870.77
10/10/42	27.58	868.82	01/04/43	26.07	870.33	03/27/43	25.50	870.90	06/15/43	25.60	870.80
10/11/42	27.55	868.85	01/05/43	26.07	870.33	03/28/43	25.51	870.89	06/16/43	25.60	870.80
10/12/42	27.51	868.89	01/06/43	26.05	870.35	03/29/43	25.50	870.90	06/17/43	25.60	870.80
10/13/42	27.46	868.94	01/07/43	26.04	870.36	03/30/43	25.49	870.91	06/18/43	25.59	870.81
10/14/42	27.45	868.95	01/08/43	26.01	870.39	03/31/43	25.46	870.94	06/19/43	25.58	870.82
10/15/42	27.44	868.96	01/09/43	26.00	870.40	04/01/43	25.49	870.91	06/20/43	25.58	870.82

139-048-06CCD **(Continued)** MP Elev (msl,ft)=896.4

Fargo Aquifer SI (ft.)=0-180

Date	Depth to Water (ft)	WL Elev (msl, ft)	Date	Depth to Water (ft)	WL Elev (msl, ft)	Date	Depth to Water (ft)	WL Elev (msl, ft)	Date	Depth to Water (ft)	WL Elev (msl, ft)
06/21/43	25.59	870.81	09/19/43	25.45	870.95	12/08/43	25.41	870.99	02/26/44	25.41	870.99
06/22/43	25.61	870.79	09/20/43	25.45	870.95	12/09/43	25.43	870.97	02/27/44	25.45	870.95
06/23/43	25.61	870.79	09/21/43	25.45	870.95	12/10/43	25.46	870.94	02/28/44	25.47	870.93
06/24/43	25.60	870.80	09/22/43	25.47	870.93	12/11/43	25.46	870.94	02/29/44	25.49	870.91
06/25/43	25.59	870.81	09/23/43	25.49	870.91	12/12/43	25.44	870.96	03/01/44	25.49	870.91
06/26/43	25.58	870.82	09/24/43	25.49	870.91	12/13/43	25.46	870.94	03/02/44	25.47	870.93
06/27/43	25.58	870.82	09/25/43	25.49	870.91	12/14/43	25.48	870.92	03/03/44	25.46	870.94
06/28/43	25.56	870.84	09/26/43	25.49	870.91	12/15/43	25.49	870.91	03/04/44	25.46	870.94
06/29/43	25.55	870.85	09/27/43	25.47	870.93	12/16/43	25.49	870.91	03/05/44	25.46	870.94
06/30/43	25.56	870.84	09/28/43	25.48	870.92	12/17/43	25.49	870.91	03/06/44	25.43	870.97
07/01/43	25.55	870.85	09/29/43	25.48	870.92	12/18/43	25.49	870.91	03/07/44	25.37	871.03
07/02/43	25.53	870.87	09/30/43	25.51	870.89	12/19/43	25.47	870.93	03/08/44	25.39	871.01
07/03/43	25.50	870.90	10/01/43	25.52	870.88	12/20/43	25.47	870.93	03/09/44	25.42	870.98
07/04/43	25.50	870.90	10/02/43	25.52	870.88	12/21/43	25.47	870.93	03/10/44	25.42	870.98
07/05/43	25.50	870.90	10/03/43	25.53	870.87	12/22/43	25.50	870.90	03/11/44	25.37	871.03
07/06/43	25.50	870.90	10/04/43	25.53	870.87	12/23/43	25.51	870.89	03/12/44	25.41	870.99
07/07/43	25.51	870.89	10/05/43	25.53	870.87	12/24/43	25.50	870.90	03/13/44	25.43	870.97
07/08/43	25.51	870.89	10/06/43	25.53	870.87	12/25/43	25.47	870.93	03/14/44	25.44	870.96
07/09/43	25.51	870.89	10/07/43	25.53	870.87	12/26/43	25.45	870.95	03/15/44	25.44	870.96
07/10/43	25.51	870.89	10/08/43	25.53	870.87	12/27/43	25.47	870.93	03/16/44	25.43	870.97
07/11/43	25.51	870.89	10/09/43	25.52	870.88	12/28/43	25.48	870.92	03/17/44	25.43	870.97
07/12/43	25.51	870.89	10/10/43	25.52	870.88	12/29/43	25.48	870.92	03/18/44	25.41	870.99
07/13/43	25.51	870.89	10/11/43	25.51	870.89	12/31/43	25.45	870.95	03/19/44	25.41	870.99
07/14/43	25.51	870.89	10/12/43	25.48	870.92				03/20/44	25.40	871.00
07/15/43	25.50	870.90	10/13/43	25.46	870.94	01/01/44	25.45	870.95	03/21/44	25.41	870.99
07/16/43	25.50	870.90	10/14/43	25.47	870.93	01/02/44	25.44	870.96	03/22/44	25.42	870.98
07/17/43	25.52	870.88	10/15/43	25.51	870.89	01/03/44	25.43	870.97	03/23/44	25.41	870.99
07/18/43	25.52	870.88	10/16/43	25.52	870.88	01/04/44	25.46	870.94	03/24/44	25.38	871.02
07/19/43	25.52	870.88	10/17/43	25.51	870.89	01/05/44	25.46	870.94	03/25/44	25.38	871.02
07/20/43	25.52	870.88	10/18/43	25.49	870.91	01/06/44	25.49	870.91	03/26/44	25.39	871.01
07/21/43	25.52	870.88	10/19/43	25.48	870.92	01/07/44	25.51	870.89	03/27/44	25.39	871.01
07/22/43	25.53	870.87	10/20/43	25.44	870.96	01/08/44	25.51	870.89	03/28/44	25.41	870.99
07/23/43	25.53	870.87	10/21/43	25.46	870.94	01/09/44	25.50	870.90	03/29/44	25.41	870.99
07/24/43	25.54	870.86	10/22/43	25.48	870.92	01/10/44	25.47	870.93	03/30/44	25.39	871.01
07/25/43	25.55	870.85	10/23/43	25.49	870.91	01/11/44	25.47	870.93	03/31/44	25.38	871.02
07/26/43	25.55	870.85	10/24/43	25.51	870.89	01/12/44	25.49	870.91	04/01/44	25.39	871.01
07/27/43	25.56	870.84	10/25/43	25.52	870.88	01/13/44	25.49	870.91	04/02/44	25.43	870.97
07/28/43	25.56	870.84	10/26/43	25.52	870.88	01/14/44	25.48	870.92	04/03/44	25.44	870.96
07/29/43	25.57	870.83	10/27/43	25.51	870.89	01/15/44	25.48	870.92	04/04/44	25.44	870.96
07/30/43	25.57	870.83	10/28/43	25.47	870.93	01/16/44	25.48	870.92	04/05/44	25.44	870.96
07/31/43	25.57	870.83	10/29/43	25.46	870.94	01/17/44	25.48	870.92	04/06/44	25.44	870.96
08/07/43	25.57	870.83	10/30/43	25.46	870.94	01/18/44	25.47	870.93	04/07/44	25.41	870.99
08/12/43	25.39	871.01	10/31/43	25.46	870.94	01/19/44	25.45	870.95	04/08/44	25.40	871.00
08/13/43	25.38	871.02	11/01/43	25.44	870.96	01/20/44	25.45	870.95	04/09/44	25.40	871.00
08/14/43	25.39	871.01	11/02/43	25.46	870.94	01/21/44	25.45	870.95	04/10/44	25.41	870.99
08/15/43	25.40	871.00	11/03/43	25.46	870.94	01/22/44	25.47	870.93	04/11/44	25.42	870.98
08/16/43	25.42	870.98	11/04/43	25.45	870.95	01/23/44	25.47	870.93	04/12/44	25.41	870.99
08/17/43	25.44	870.96	11/05/43	25.44	870.96	01/24/44	25.46	870.94	04/13/44	25.41	870.99
08/18/43	25.44	870.96	11/06/43	25.46	870.94	01/25/44	25.43	870.97	04/14/44	25.39	871.01
08/19/43	25.43	870.97	11/07/43	25.46	870.94	01/26/44	25.47	870.93	04/15/44	25.38	871.02
08/20/43	25.43	870.97	11/08/43	25.46	870.94	01/27/44	25.47	870.93	04/16/44	25.40	871.00
08/21/43	25.42	870.98	11/09/43	25.46	870.94	01/28/44	25.46	870.94	04/17/44	25.41	870.99
08/22/43	25.42	870.98	11/10/43	25.46	870.94	01/29/44	25.45	870.95	04/18/44	25.41	870.99
08/23/43	25.42	870.98	11/11/43	25.46	870.94	01/30/44	25.45	870.95	04/19/44	25.41	870.99
08/24/43	25.42	870.98	11/12/43	25.47	870.93	01/31/44	25.45	870.95	04/20/44	25.41	870.99
08/25/43	25.43	870.97	11/13/43	25.48	870.92	02/01/44	25.45	870.95	04/21/44	25.41	870.99
08/26/43	25.44	870.96	11/14/43	25.48	870.92	02/02/44	25.45	870.95	04/22/44	25.41	870.99
08/27/43	25.45	870.95	11/15/43	25.48	870.92	02/03/44	25.43	870.97	04/23/44	25.41	870.99
08/28/43	25.45	870.95	11/16/43	25.48	870.92	02/04/44	25.43	870.97	04/24/44	25.40	871.00
08/29/43	25.44	870.96	11/17/43	25.46	870.94	02/05/44	25.42	870.98	04/25/44	25.36	871.04
08/30/43	25.44	870.96	11/18/43	25.43	870.97	02/06/44	25.42	870.98	04/26/44	25.39	871.01
08/31/43	25.43	870.97	11/19/43	25.45	870.95	02/07/44	25.41	870.99	04/27/44	25.41	870.99
09/01/43	25.41	870.99	11/20/43	25.45	870.95	02/08/44	25.42	870.98	04/28/44	25.41	870.99
09/02/43	25.42	870.98	11/21/43	25.47	870.93	02/09/44	25.44	870.96	04/29/44	25.41	870.99
09/03/43	25.43	870.97	11/22/43	25.51	870.89	02/10/44	25.47	870.93	04/30/44	25.39	871.01
09/04/43	25.43	870.97	11/23/43	25.52	870.88	02/11/44	25.49	870.91	05/01/44	25.35	871.05
09/05/43	25.42	870.98	11/24/43	25.52	870.88	02/12/44	25.49	870.91	05/02/44	25.33	871.07
09/06/43	25.41	870.99	11/25/43	25.51	870.89	02/13/44	25.47	870.93	05/03/44	25.33	871.07
09/07/43	25.40	871.00	11/26/43	25.49	870.91	02/14/44	25.42	870.98	05/04/44	25.33	871.07
09/08/43	25.42	870.98	11/27/43	25.48	870.92	02/15/44	25.43	870.97	05/05/44	25.36	871.04
09/09/43	25.44	870.96	11/28/43	25.47	870.93	02/16/44	25.44	870.96	05/06/44	25.36	871.04
09/10/43	25.47	870.93	11/29/43	25.46	870.94	02/17/44	25.44	870.96	05/07/44	25.35	871.05
09/11/43	25.48	870.92	11/30/43	25.44	870.96	02/18/44	25.45	870.95	05/08/44	25.35	871.05
09/12/43	25.48	870.92	12/01/43	25.42	870.98	02/19/44	25.45	870.95	05/09/44	25.35	871.05
09/13/43	25.48	870.92	12/02/43	25.44	870.96	02/20/44	25.45	870.95	05/10/44	25.35	871.05
09/14/43	25.44	870.96	12/03/43	25.44	870.96	02/21/44	25.43	870.97	05/11/44	25.35	871.05
09/15/43	25.44	870.96	12/04/43	25.43	870.97	02/22/44	25.43	870.97	05/12/44	25.35	871.05
09/16/43	25.46	870.94	12/05/43	25.43	870.97	02/23/44	25.42	870.98	05/13/44	25.31	871.09
09/17/43	25.46	870.94	12/06/43	25.44	870.96	02/24/44	25.41	870.99	05/14/44	25.30	871.10
09/18/43	25.46	870.94	12/07/43	25.44	870.96	02/25/44	25.41	870.99	05/15/44	25.29	871.11

139-048-06CCD **(Continued)** MP Elev (msl,ft)=896.4

Fargo Aquifer SI (ft.)=0-180

Date	Depth to Water (ft)	WL Elev (msl, ft)	Date	Depth to Water (ft)	WL Elev (msl, ft)	Date	Depth to Water (ft)	WL Elev (msl, ft)	Date	Depth to Water (ft)	WL Elev (msl, ft)
05/16/44	25.26	871.14	08/07/44	25.19	871.21	11/04/44	25.41	870.99	01/22/45	25.37	871.03
05/17/44	25.25	871.15	08/08/44	25.19	871.21	11/05/44	25.41	870.99	01/23/45	25.37	871.03
05/18/44	25.25	871.15	08/09/44	25.18	871.22	11/06/44	25.40	871.00	01/24/45	25.36	871.04
05/19/44	25.25	871.15	08/10/44	25.17	871.23	11/07/44	25.39	871.01	01/25/45	25.36	871.04
05/20/44	25.26	871.14	08/11/44	25.19	871.21	11/08/44	25.36	871.04	01/26/45	25.36	871.04
05/21/44	25.25	871.15	08/12/44	25.19	871.21	11/09/44	25.33	871.07	01/27/45	25.38	871.02
05/22/44	25.24	871.16	08/13/44	25.20	871.20	11/10/44	25.34	871.06	01/28/45	25.38	871.02
05/23/44	25.23	871.17	08/14/44	25.21	871.19	11/11/44	25.34	871.06	01/29/45	25.39	871.01
05/24/44	25.23	871.17	08/15/44	25.21	871.19	11/12/44	25.33	871.07	01/30/45	25.39	871.01
05/25/44	25.24	871.16	08/19/44	25.23	871.17	11/13/44	25.33	871.07	01/31/45	25.41	870.99
05/26/44	25.28	871.12	08/20/44	25.24	871.16	11/14/44	25.32	871.08	02/01/45	25.42	870.98
05/27/44	25.31	871.09	08/21/44	25.26	871.14	11/15/44	25.32	871.08	02/02/45	25.43	870.97
05/28/44	25.32	871.08	08/22/44	25.28	871.12	11/16/44	25.36	871.04	02/03/45	25.43	870.97
05/29/44	25.32	871.08	08/23/44	25.30	871.10	11/17/44	25.36	871.04	02/04/45	25.40	871.00
05/30/44	25.31	871.09	08/24/44	25.31	871.09	11/18/44	25.37	871.03	02/05/45	25.40	871.00
05/31/44	25.31	871.09	08/25/44	25.31	871.09	11/19/44	25.37	871.03	02/06/45	25.39	871.01
06/01/44	25.30	871.10	08/26/44	25.31	871.09	11/20/44	25.37	871.03	02/07/45	25.40	871.00
06/02/44	25.27	871.13	08/27/44	25.29	871.11	11/21/44	25.37	871.03	02/08/45	25.40	871.00
06/03/44	25.26	871.14	08/28/44	25.28	871.12	11/22/44	25.36	871.04	02/09/45	25.36	871.04
06/04/44	25.22	871.18	08/29/44	25.25	871.15	11/23/44	25.35	871.05	02/10/45	25.36	871.04
06/05/44	25.21	871.19	08/30/44	25.23	871.17	11/24/44	25.35	871.05	02/11/45	25.36	871.04
06/09/44	25.27	871.13	08/31/44	25.22	871.18	11/25/44	25.35	871.05	02/12/45	25.37	871.03
06/10/44	25.27	871.13	09/01/44	25.17	871.23	11/26/44	25.35	871.05	02/13/45	25.36	871.04
06/11/44	25.27	871.13	09/08/44	25.26	871.14	11/27/44	25.35	871.05	02/14/45	25.34	871.06
06/12/44	25.27	871.13	09/09/44	25.25	871.15	11/28/44	25.35	871.05	02/15/45	25.35	871.05
06/13/44	25.24	871.16	09/10/44	25.24	871.16	11/29/44	25.35	871.05	02/16/45	25.39	871.01
06/14/44	25.22	871.18	09/11/44	25.24	871.16	11/30/44	25.36	871.04	02/17/45	25.37	871.03
06/15/44	25.23	871.17	09/12/44	25.25	871.15	12/01/44	25.37	871.03	02/18/45	25.43	870.97
06/16/44	25.25	871.15	09/13/44	25.25	871.15	12/02/44	25.37	871.03	02/19/45	25.43	870.97
06/17/44	25.27	871.13	09/14/44	25.25	871.15	12/03/44	25.36	871.04	02/20/45	25.43	870.97
06/18/44	25.27	871.13	09/15/44	25.24	871.16	12/04/44	25.35	871.05	02/21/45	25.36	871.04
06/19/44	25.28	871.12	09/16/44	25.23	871.17	12/05/44	25.35	871.05	02/22/45	25.38	871.02
06/20/44	25.28	871.12	09/17/44	25.23	871.17	12/06/44	25.34	871.06	02/23/45	25.36	871.04
06/21/44	25.27	871.13	09/18/44	25.24	871.16	12/07/44	25.31	871.09	02/24/45	25.38	871.02
06/22/44	25.28	871.12	09/19/44	25.25	871.15	12/08/44	25.33	871.07	02/25/45	25.40	871.00
06/23/44	25.29	871.11	09/20/44	25.25	871.15	12/09/44	25.35	871.05	02/26/45	25.40	871.00
06/24/44	25.30	871.10	09/21/44	25.27	871.13	12/10/44	25.37	871.03	02/27/45	25.39	871.01
06/25/44	25.29	871.11	09/22/44	25.30	871.10	12/11/44	25.37	871.03	02/28/45	25.39	871.01
06/26/44	25.29	871.11	09/23/44	25.31	871.09	12/12/44	25.37	871.03	03/01/45	25.38	871.02
06/27/44	25.28	871.12	09/24/44	25.31	871.09	12/13/44	25.36	871.04	03/02/45	25.36	871.04
06/28/44	25.31	871.09	09/25/44	25.30	871.10	12/14/44	25.36	871.04	03/03/45	25.37	871.03
06/29/44	25.35	871.05	09/26/44	25.30	871.10	12/15/44	25.34	871.06	03/04/45	25.38	871.02
06/30/44	25.36	871.04	09/27/44	25.30	871.10	12/16/44	25.34	871.06	03/05/45	25.39	871.01
07/01/44	25.36	871.04	09/28/44	25.30	871.10	12/17/44	25.35	871.05	03/06/45	25.30	871.10
07/02/44	25.35	871.05	09/29/44	25.30	871.10	12/18/44	25.35	871.05	03/07/45	25.40	871.00
07/03/44	25.33	871.07	09/30/44	25.29	871.11	12/19/44	25.35	871.05	03/08/45	25.40	871.00
07/04/44	25.32	871.08	10/01/44	25.32	871.08	12/20/44	25.35	871.05	03/09/45	25.39	871.01
07/05/44	25.29	871.11	10/02/44	25.33	871.07	12/21/44	25.38	871.02	03/10/45	25.40	871.00
07/06/44	25.24	871.16	10/03/44	25.33	871.07	12/22/44	25.38	871.02	03/11/45	25.40	871.00
07/07/44	25.20	871.20	10/04/44	25.32	871.08	12/23/44	25.38	871.02	03/12/45	25.41	870.99
07/08/44	25.20	871.20	10/05/44	25.31	871.09	12/24/44	25.37	871.03	03/13/45	25.41	870.99
07/09/44	25.21	871.19	10/06/44	25.27	871.13	12/25/44	25.39	871.01	03/14/45	25.39	871.01
07/10/44	25.21	871.19	10/07/44	25.30	871.10	12/26/44	25.40	871.00	03/15/45	25.39	871.01
07/11/44	25.21	871.19	10/08/44	25.33	871.07	12/27/44	25.38	871.02	03/16/45	25.37	871.03
07/12/44	25.20	871.20	10/09/44	25.34	871.06	12/28/44	25.39	871.01	03/17/45	25.37	871.03
07/13/44	25.20	871.20	10/10/44	25.34	871.06	12/29/44	25.38	871.02	03/18/45	25.37	871.03
07/14/44	25.20	871.20	10/11/44	25.34	871.06	12/30/44	25.35	871.05	03/19/45	25.39	871.01
07/15/44	25.21	871.19	10/12/44	25.34	871.06	12/31/44	25.36	871.04	03/20/45	25.39	871.01
07/16/44	25.22	871.18	10/13/44	25.33	871.07				03/21/45	25.39	871.01
07/17/44	25.22	871.18	10/14/44	25.35	871.05	01/01/45	25.37	871.03	03/22/45	25.38	871.02
07/18/44	25.22	871.18	10/15/44	25.38	871.02	01/02/45	25.37	871.03	03/23/45	25.35	871.05
07/19/44	25.23	871.17	10/16/44	25.39	871.01	01/03/45	25.36	871.04	03/24/45	25.32	871.08
07/20/44	25.24	871.16	10/17/44	25.39	871.01	01/04/45	25.38	871.02	03/25/45	25.31	871.09
07/21/44	25.26	871.14	10/18/44	25.37	871.03	01/05/45	25.38	871.02	03/26/45	25.31	871.09
07/22/44	25.26	871.14	10/19/44	25.38	871.02	01/06/45	25.38	871.02	03/27/45	25.27	871.13
07/23/44	25.25	871.15	10/20/44	25.38	871.02	01/07/45	25.36	871.04	03/28/45	25.28	871.12
07/24/44	25.24	871.16	10/21/44	25.39	871.01	01/08/45	25.36	871.04	03/29/45	25.33	871.07
07/25/44	25.24	871.16	10/22/44	25.39	871.01	01/09/45	25.37	871.03	03/30/45	25.34	871.06
07/26/44	25.24	871.16	10/23/44	25.38	871.02	01/10/45	25.37	871.03	03/31/45	25.34	871.06
07/27/44	25.26	871.14	10/24/44	25.37	871.03	01/11/45	25.37	871.03	04/01/45	25.33	871.07
07/28/44	25.26	871.14	10/25/44	25.37	871.03	01/12/45	25.34	871.06	04/02/45	25.33	871.07
07/29/44	25.27	871.13	10/26/44	25.41	870.99	01/13/45	25.34	871.06	04/03/45	25.35	871.05
07/30/44	25.27	871.13	10/27/44	25.41	870.99	01/14/45	25.33	871.07	04/04/45	25.35	871.05
07/31/44	25.28	871.12	10/28/44	25.41	870.99	01/15/45	25.36	871.04	04/05/45	25.35	871.05
08/01/44	25.31	871.09	10/29/44	25.41	870.99	01/16/45	25.37	871.03	04/06/45	25.36	871.04
08/02/44	25.31	871.09	10/30/44	25.41	870.99	01/17/45	25.37	871.03	04/07/45	25.36	871.04
08/03/44	25.31	871.09	10/31/44	25.38	871.02	01/18/45	25.37	871.03	04/08/45	25.34	871.06
08/04/44	25.24	871.16	11/01/44	25.36	871.04	01/19/45	25.38	871.02	04/09/45	25.33	871.07
08/05/44	25.20	871.20	11/02/44	25.34	871.06	01/20/45	25.38	871.02	04/10/45	25.33	871.07
08/06/44	25.19	871.21	11/03/44	25.38	871.02	01/21/45	25.38	871.02	04/11/45	25.33	871.07

139-048-06CCD **(Continued)** MP Elev (msl,ft)=896.4

Fargo Aquifer SI (ft.)=0-180

Date	Depth to Water (ft)	WL Elev (msl, ft)	Date	Depth to Water (ft)	WL Elev (msl, ft)	Date	Depth to Water (ft)	WL Elev (msl, ft)	Date	Depth to Water (ft)	WL Elev (msl, ft)
04/12/45	25.37	871.03	07/01/45	25.61	870.79	09/19/45	25.95	870.45	12/08/45	26.09	870.31
04/13/45	25.40	871.00	07/02/45	25.62	870.78	09/20/45	25.92	870.48	12/09/45	26.14	870.26
04/14/45	25.40	871.00	07/03/45	25.62	870.78	09/21/45	25.92	870.48	12/10/45	26.17	870.23
04/15/45	25.39	871.01	07/04/45	25.61	870.79	09/22/45	25.92	870.48	12/11/45	26.18	870.22
04/16/45	25.31	871.09	07/05/45	25.61	870.79	09/23/45	25.91	870.49	12/12/45	26.18	870.22
04/17/45	25.33	871.07	07/06/45	25.63	870.77	09/24/45	25.92	870.48	12/13/45	26.17	870.23
04/18/45	25.34	871.06	07/07/45	25.63	870.77	09/25/45	25.93	870.47	12/14/45	26.20	870.20
04/19/45	25.35	871.05	07/08/45	25.63	870.77	09/26/45	25.94	870.46	12/15/45	26.20	870.20
04/20/45	25.35	871.05	07/09/45	25.64	870.76	09/27/45	25.96	870.44	12/16/45	26.21	870.19
04/21/45	25.37	871.03	07/10/45	25.65	870.75	09/28/45	26.01	870.39	12/17/45	26.23	870.17
04/22/45	25.37	871.03	07/11/45	25.66	870.74	09/29/45	26.02	870.38	12/18/45	26.24	870.16
04/23/45	25.35	871.05	07/12/45	25.66	870.74	09/30/45	26.02	870.38	12/19/45	26.24	870.16
04/24/45	25.34	871.06	07/13/45	25.68	870.72	10/01/45	26.01	870.39	12/20/45	26.23	870.17
04/25/45	25.35	871.05	07/14/45	25.69	870.71	10/02/45	26.01	870.39	12/21/45	26.24	870.16
04/26/45	25.36	871.04	07/15/45	25.69	870.71	10/03/45	26.01	870.39	12/22/45	26.25	870.15
04/27/45	25.36	871.04	07/16/45	25.69	870.71	10/04/45	25.98	870.42	12/23/45	26.25	870.15
04/28/45	25.36	871.04	07/17/45	25.70	870.70	10/05/45	25.98	870.42	12/24/45	26.24	870.16
04/29/45	25.38	871.02	07/18/45	25.70	870.70	10/06/45	25.97	870.43	12/25/45	26.21	870.19
04/30/45	25.40	871.00	07/19/45	25.71	870.69	10/07/45	25.98	870.42	12/26/45	26.18	870.22
05/01/45	25.40	871.00	07/20/45	25.73	870.67	10/08/45	26.01	870.39	12/27/45	26.18	870.22
05/02/45	25.38	871.02	07/21/45	25.73	870.67	10/09/45	26.01	870.39	12/28/45	26.18	870.22
05/03/45	25.39	871.01	07/22/45	25.73	870.67	10/10/45	26.01	870.39	12/29/45	26.16	870.24
05/04/45	25.40	871.00	07/23/45	25.72	870.68	10/11/45	26.01	870.39	12/30/45	26.17	870.23
05/05/45	25.40	871.00	07/24/45	25.74	870.66	10/12/45	26.04	870.36	12/31/45	26.19	870.21
05/06/45	25.39	871.01	07/25/45	25.77	870.63	10/13/45	26.05	870.35			
05/07/45	25.36	871.04	07/26/45	25.77	870.63	10/14/45	26.05	870.35	01/04/46	26.18	870.22
05/08/45	25.38	871.02	07/27/45	25.76	870.64	10/15/45	26.05	870.35	01/05/46	26.17	870.23
05/09/45	25.39	871.01	07/28/45	25.75	870.65	10/16/45	26.05	870.35	01/06/46	26.16	870.24
05/10/45	25.40	871.00	07/29/45	25.75	870.65	10/17/45	26.04	870.36	01/07/46	26.19	870.21
05/11/45	25.39	871.01	07/30/45	25.75	870.65	10/18/45	26.02	870.38	01/08/46	26.20	870.20
05/12/45	25.39	871.01	07/31/45	25.76	870.64	10/19/45	26.00	870.40	01/09/46	26.20	870.20
05/13/45	25.40	871.00	08/01/45	25.79	870.61	10/20/45	26.01	870.39	01/10/46	26.20	870.20
05/14/45	25.42	870.98	08/02/45	25.81	870.59	10/21/45	26.02	870.38	01/11/46	26.21	870.19
05/15/45	25.44	870.96	08/03/45	25.82	870.58	10/22/45	26.03	870.37	01/12/46	26.26	870.14
05/16/45	25.45	870.95	08/04/45	25.82	870.58	10/23/45	26.05	870.35	01/13/46	26.26	870.14
05/17/45	25.45	870.95	08/05/45	25.81	870.59	10/24/45	26.05	870.35	01/14/46	26.26	870.14
05/18/45	25.46	870.94	08/06/45	25.81	870.59	10/25/45	26.04	870.36	01/15/46	26.27	870.13
05/19/45	25.46	870.94	08/07/45	25.83	870.57	10/26/45	26.05	870.35	01/16/46	26.27	870.13
05/20/45	25.45	870.95	08/08/45	25.84	870.56	10/27/45	26.05	870.35	01/17/46	26.24	870.16
05/21/45	25.42	870.98	08/09/45	25.84	870.56	10/28/45	26.05	870.35	01/18/46	26.24	870.16
05/22/45	25.43	870.97	08/10/45	25.83	870.57	10/29/45	26.08	870.32	01/19/46	26.24	870.16
05/23/45	25.44	870.96	08/11/45	25.83	870.57	10/30/45	26.08	870.32	01/20/46	26.24	870.16
05/24/45	25.44	870.96	08/12/45	25.83	870.57	10/31/45	26.06	870.34	01/21/46	26.25	870.15
05/25/45	25.44	870.96	08/13/45	25.82	870.58	11/01/45	26.06	870.34	01/22/46	26.25	870.15
05/26/45	25.45	870.95	08/14/45	25.82	870.58	11/02/45	26.04	870.36	01/23/46	26.22	870.18
05/27/45	25.45	870.95	08/15/45	25.83	870.57	11/03/45	26.06	870.34	01/24/46	26.23	870.17
05/28/45	25.46	870.94	08/16/45	25.83	870.57	11/04/45	26.06	870.34	01/25/46	26.22	870.18
05/29/45	25.47	870.93	08/17/45	25.82	870.58	11/05/45	26.05	870.35	01/26/46	26.26	870.14
05/30/45	25.46	870.94	08/18/45	25.83	870.57	11/06/45	26.05	870.35	01/27/46	26.26	870.14
05/31/45	25.46	870.94	08/19/45	25.83	870.57	11/07/45	26.06	870.34	01/28/46	26.25	870.15
06/01/45	25.43	870.97	08/20/45	25.84	870.56	11/08/45	26.06	870.34	01/29/46	26.25	870.15
06/02/45	25.41	870.99	08/21/45	25.87	870.53	11/09/45	26.10	870.30	01/30/46	26.23	870.17
06/03/45	25.43	870.97	08/22/45	25.89	870.51	11/10/45	26.11	870.29	01/31/46	26.23	870.17
06/04/45	25.44	870.96	08/23/45	25.89	870.51	11/11/45	26.11	870.29	02/01/46	26.23	870.17
06/05/45	25.45	870.95	08/24/45	25.89	870.51	11/12/45	26.10	870.30	02/02/46	26.25	870.15
06/06/45	25.46	870.94	08/25/45	25.90	870.50	11/13/45	26.08	870.32	02/03/46	26.25	870.15
06/07/45	25.46	870.94	08/26/45	25.90	870.50	11/14/45	26.11	870.29	02/04/46	26.25	870.15
06/08/45	25.46	870.94	08/27/45	25.89	870.51	11/15/45	26.11	870.29	02/05/46	26.22	870.18
06/09/45	25.46	870.94	08/28/45	25.88	870.52	11/16/45	26.09	870.31	02/06/46	26.14	870.26
06/10/45	25.45	870.95	08/29/45	25.90	870.50	11/17/45	26.07	870.33	02/07/46	26.08	870.32
06/11/45	25.44	870.96	08/30/45	25.91	870.49	11/18/45	26.10	870.30	02/08/46	26.05	870.35
06/12/45	25.44	870.96	08/31/45	25.91	870.49	11/19/45	26.10	870.30	02/09/46	26.06	870.34
06/13/45	25.46	870.94	09/01/45	25.93	870.47	11/20/45	26.09	870.31	02/10/46	26.06	870.34
06/14/45	25.47	870.93	09/02/45	25.95	870.45	11/21/45	26.10	870.30	02/11/46	26.05	870.35
06/15/45	25.49	870.91	09/03/45	25.95	870.45	11/22/45	26.10	870.30	02/12/46	26.05	870.35
06/16/45	25.50	870.90	09/04/45	25.95	870.45	11/23/45	26.13	870.27	02/13/46	26.05	870.35
06/17/45	25.50	870.90	09/05/45	25.94	870.46	11/24/45	26.12	870.28	02/14/46	26.04	870.36
06/18/45	25.51	870.89	09/06/45	25.94	870.46	11/25/45	26.12	870.28	02/15/46	26.04	870.36
06/19/45	25.51	870.89	09/07/45	25.96	870.44	11/26/45	26.12	870.28	02/16/46	26.03	870.37
06/20/45	25.51	870.89	09/08/45	25.96	870.44	11/27/45	26.12	870.28	02/17/46	26.05	870.35
06/21/45	25.51	870.89	09/09/45	25.94	870.46	11/28/45	26.13	870.27	02/18/46	26.05	870.35
06/22/45	25.51	870.89	09/10/45	25.94	870.46	11/29/45	26.14	870.26	02/19/46	26.05	870.35
06/23/45	25.52	870.88	09/11/45	25.94	870.46	11/30/45	26.14	870.26	02/20/46	26.05	870.35
06/24/45	25.54	870.86	09/12/45	25.96	870.44	12/01/45	26.14	870.26	02/21/46	26.05	870.35
06/25/45	25.57	870.83	09/13/45	25.97	870.43	12/02/45	26.15	870.25	02/22/46	26.06	870.34
06/26/45	25.57	870.83	09/14/45	25.97	870.43	12/03/45	26.18	870.22	02/23/46	26.06	870.34
06/27/45	25.55	870.85	09/15/45	25.98	870.42	12/04/45	26.18	870.22	02/24/46	26.07	870.33
06/28/45	25.52	870.88	09/16/45	25.98	870.42	12/05/45	26.17	870.23	02/25/46	26.07	870.33
06/29/45	25.53	870.87	09/17/45	25.98	870.42	12/06/45	26.11	870.29	02/26/46	26.04	870.36
06/30/45	25.57	870.83	09/18/45	25.95	870.45	12/07/45	26.09	870.31	02/27/46	26.05	870.35

139-048-06CCD **(Continued)** MP Elev (msl,ft)=896.4

Fargo Aquifer SI (ft.)=0-180

Date	Depth to Water (ft)	WL Elev (msl, ft)	Date	Depth to Water (ft)	WL Elev (msl, ft)	Date	Depth to Water (ft)	WL Elev (msl, ft)	Date	Depth to Water (ft)	WL Elev (msl, ft)
02/28/46	26.04	870.36	05/19/46	26.30	870.10	08/07/46	27.03	869.37	11/02/46	29.05	867.35
03/01/46	26.01	870.39	05/20/46	26.30	870.10	08/08/46	27.20	869.20	11/03/46	29.05	867.35
03/02/46	26.02	870.38	05/21/46	26.30	870.10	08/09/46	27.42	868.98	11/04/46	29.05	867.35
03/03/46	26.05	870.35	05/22/46	26.30	870.10	08/10/46	27.60	868.80	11/05/46	29.05	867.35
03/04/46	26.08	870.32	05/23/46	26.30	870.10	08/11/46	27.79	868.61	11/06/46	29.03	867.37
03/05/46	26.08	870.32	05/24/46	26.30	870.10	08/12/46	27.98	868.42	11/07/46	28.96	867.44
03/06/46	26.08	870.32	05/25/46	26.34	870.06	08/13/46	28.17	868.23	11/08/46	28.89	867.51
03/07/46	26.08	870.32	05/26/46	26.35	870.05	08/14/46	28.36	868.04	11/15/46	28.74	867.66
03/08/46	26.12	870.28	05/27/46	26.36	870.04	08/15/46	28.55	867.85	11/16/46	28.73	867.67
03/09/46	26.12	870.28	05/28/46	26.36	870.04	08/16/46	28.74	867.66	11/17/46	28.76	867.64
03/10/46	26.13	870.27	05/29/46	26.36	870.04	08/17/46	28.93	867.47	11/18/46	28.75	867.65
03/11/46	26.13	870.27	05/30/46	26.36	870.04	08/18/46	29.12	867.28	11/19/46	28.72	867.68
03/12/46	26.09	870.31	05/31/46	26.35	870.05	08/19/46	29.31	867.09	11/20/46	28.70	867.70
03/13/46	26.09	870.31	06/01/46	26.37	870.03	08/20/46	29.50	866.90	11/21/46	28.67	867.73
03/14/46	26.11	870.29	06/02/46	26.39	870.01	08/21/46	29.68	866.72	11/22/46	28.63	867.77
03/15/46	26.13	870.27	06/03/46	26.41	869.99	08/22/46	29.87	866.53	11/23/46	28.63	867.77
03/16/46	26.14	870.26	06/04/46	26.41	869.99	08/23/46	30.02	866.38	11/24/46	28.57	867.83
03/17/46	26.17	870.23	06/05/46	26.40	870.00	08/24/46	30.13	866.27	11/25/46	28.55	867.85
03/18/46	26.20	870.20	06/06/46	26.39	870.01	08/25/46	30.21	866.19	11/26/46	28.53	867.87
03/19/46	26.21	870.19	06/07/46	26.35	870.05	08/26/46	30.28	866.12	11/27/46	28.53	867.87
03/20/46	26.21	870.19	06/08/46	26.37	870.03	08/27/46	30.36	866.04	11/28/46	28.53	867.87
03/21/46	26.19	870.21	06/09/46	26.39	870.01	08/28/46	30.47	865.93	11/29/46	28.54	867.86
03/22/46	26.18	870.22	06/10/46	26.39	870.01	08/29/46	30.57	865.83	11/30/46	28.53	867.87
03/23/46	26.18	870.22	06/11/46	26.40	870.00	08/30/46	30.64	865.76	12/01/46	28.53	867.87
03/24/46	26.18	870.22	06/12/46	26.40	870.00	08/31/46	30.66	865.74	12/02/46	28.53	867.87
03/25/46	26.16	870.24	06/13/46	26.42	869.98	09/01/46	30.72	865.68	12/03/46	28.49	867.91
03/26/46	26.16	870.24	06/14/46	26.43	869.97	09/02/46	30.79	865.61	12/04/46	28.46	867.94
03/27/46	26.15	870.25	06/15/46	26.43	869.97	09/03/46	30.82	865.58	12/05/46	28.44	867.96
03/28/46	26.14	870.26	06/16/46	26.42	869.98	09/05/46	30.88	865.52	12/06/46	28.44	867.96
03/29/46	26.15	870.25	06/17/46	26.44	869.96	09/06/46	30.92	865.48	12/07/46	28.40	868.00
03/30/46	26.17	870.23	06/18/46	26.46	869.94	09/07/46	30.96	865.44	12/08/46	28.38	868.02
03/31/46	26.17	870.23	06/19/46	26.47	869.93	09/08/46	31.00	865.40	12/09/46	28.35	868.05
04/01/46	26.16	870.24	06/20/46	26.47	869.93	09/09/46	31.02	865.38	12/10/46	28.35	868.05
04/02/46	26.16	870.24	06/21/46	26.44	869.96	09/10/46	31.02	865.38	12/11/46	28.32	868.08
04/03/46	26.16	870.24	06/22/46	26.41	869.99	09/11/46	31.05	865.35	12/12/46	28.28	868.12
04/04/46	26.13	870.27	06/23/46	26.41	869.99	09/12/46	31.06	865.34	12/13/46	28.28	868.12
04/05/46	26.12	870.28	06/24/46	26.40	870.00	09/13/46	31.06	865.34	12/14/46	28.29	868.11
04/06/46	26.12	870.28	06/25/46	26.39	870.01	09/14/46	31.05	865.35	12/16/46	28.27	868.13
04/07/46	26.12	870.28	06/26/46	26.40	870.00	09/15/46	31.02	865.38	12/17/46	28.23	868.17
04/08/46	26.13	870.27	06/27/46	26.39	870.01	09/16/46	30.97	865.43	12/18/46	28.23	868.17
04/09/46	26.15	870.25	06/28/46	26.39	870.01	09/17/46	30.92	865.48	12/19/46	28.22	868.18
04/10/46	26.16	870.24	06/29/46	26.39	870.01	09/18/46	30.89	865.51	12/20/46	28.18	868.22
04/11/46	26.19	870.21	06/30/46	26.39	870.01	09/19/46	30.84	865.56	12/21/46	28.16	868.24
04/12/46	26.20	870.20	07/01/46	26.42	869.98	09/20/46	30.76	865.64	12/22/46	28.16	868.24
04/13/46	26.20	870.20	07/02/46	26.42	869.98	09/21/46	30.69	865.71	12/23/46	28.15	868.25
04/14/46	26.18	870.22	07/03/46	26.42	869.98	09/22/46	30.62	865.78	12/24/46	28.15	868.25
04/15/46	26.20	870.20	07/04/46	26.42	869.98	09/23/46	30.58	865.82	12/25/46	28.15	868.25
04/16/46	26.21	870.19	07/05/46	26.42	869.98	09/24/46	30.55	865.85	12/26/46	28.15	868.25
04/17/46	26.22	870.18	07/06/46	26.42	869.98	09/25/46	30.52	865.88	12/27/46	28.13	868.27
04/18/46	26.23	870.17	07/07/46	26.42	869.98	09/26/46	30.49	865.91	12/28/46	28.09	868.31
04/19/46	26.24	870.16	07/08/46	26.43	869.97	09/27/46	30.44	865.96	12/29/46	28.10	868.30
04/20/46	26.25	870.15	07/09/46	26.43	869.97	09/28/46	30.39	866.01	12/30/46	28.11	868.29
04/21/46	26.25	870.15	07/10/46	26.40	870.00	09/29/46	30.38	866.02	12/31/46	28.12	868.28
04/22/46	26.25	870.15	07/11/46	26.44	869.96	09/30/46	30.37	866.03			
04/23/46	26.25	870.15	07/12/46	26.45	869.95	10/01/46	30.30	866.10	01/01/47	28.14	868.26
04/24/46	26.25	870.15	07/13/46	26.45	869.95	10/02/46	30.23	866.17	01/02/47	28.13	868.27
04/25/46	26.27	870.13	07/14/46	26.46	869.94	10/03/46	30.16	866.24	01/03/47	28.15	868.25
04/26/46	26.28	870.12	07/15/46	26.49	869.91	10/04/46	30.12	866.28	01/04/47	28.14	868.26
04/27/46	26.28	870.12	07/16/46	26.49	869.91	10/05/46	30.08	866.32	01/05/47	28.09	868.31
04/28/46	26.27	870.13	07/17/46	26.49	869.91	10/06/46	30.00	866.40	01/06/47	28.05	868.35
04/29/46	26.26	870.14	07/18/46	26.48	869.92	10/07/46	29.96	866.44	01/07/47	28.02	868.38
04/30/46	26.27	870.13	07/19/46	26.50	869.90	10/08/46	29.91	866.49	01/08/47	28.00	868.40
05/01/46	26.29	870.11	07/20/46	26.51	869.89	10/09/46	29.85	866.55	01/09/47	28.01	868.39
05/02/46	26.31	870.09	07/21/46	26.51	869.89	10/10/46	29.76	866.64	01/10/47	28.01	868.39
05/03/46	26.32	870.08	07/22/46	26.51	869.89	10/11/46	29.70	866.70	01/11/47	27.94	868.46
05/04/46	26.32	870.08	07/23/46	26.51	869.89	10/18/46	29.47	866.93	01/12/47	27.93	868.47
05/05/46	26.30	870.10	07/24/46	26.54	869.86	10/19/46	29.45	866.95	01/13/47	27.87	868.53
05/06/46	26.31	870.09	07/25/46	26.56	869.84	10/20/46	29.43	866.97	01/14/47	27.89	868.51
05/07/46	26.33	870.07	07/26/46	26.57	869.83	10/21/46	29.39	867.01	01/15/47	27.89	868.51
05/08/46	26.33	870.07	07/27/46	26.57	869.83	10/22/46	29.34	867.06	01/16/47	27.89	868.51
05/09/46	26.32	870.08	07/28/46	26.57	869.83	10/23/46	29.32	867.08	01/17/47	27.89	868.51
05/10/46	26.32	870.08	07/29/46	26.57	869.83	10/24/46	29.28	867.12	01/18/47	27.89	868.51
05/11/46	26.31	870.09	07/30/46	26.57	869.83	10/25/46	29.22	867.18	01/19/47	27.88	868.52
05/12/46	26.31	870.09	07/31/46	26.58	869.82	10/26/46	29.20	867.20	01/20/47	27.84	868.56
05/13/46	26.30	870.10	08/01/46	26.59	869.81	10/27/46	29.20	867.20	01/21/47	27.87	868.53
05/14/46	26.29	870.11	08/02/46	26.60	869.80	10/28/46	29.20	867.20	01/22/47	27.87	868.53
05/15/46	26.32	870.08	08/03/46	26.64	869.76	10/29/46	29.18	867.22	01/23/47	27.86	868.54
05/16/46	26.32	870.08	08/04/46	26.70	869.70	10/30/46	29.13	867.27	01/24/47	27.81	868.59
05/17/46	26.32	870.08	08/05/46	26.78	869.62	10/31/46	29.10	867.30	01/25/47	27.81	868.59
05/18/46	26.30	870.10	08/06/46	26.89	869.51	11/01/46	29.08	867.32	01/26/47	27.79	868.61

139-048-06CCD **(Continued)** MP Elev (msl,ft)=896.4

Fargo Aquifer SI (ft.)=0-180

Date	Depth to Water (ft)	WL Elev (msl, ft)
01/27/47	27.78	868.62
01/28/47	27.82	868.58
01/29/47	27.84	868.56
01/30/47	27.84	868.56
01/31/47	27.82	868.58
02/01/47	27.84	868.56
02/02/47	27.85	868.55
02/03/47	27.82	868.58
02/04/47	27.81	868.59
02/05/47	27.81	868.59
02/06/47	27.80	868.60
02/07/47	27.76	868.64
02/08/47	27.75	868.65
02/09/47	27.75	868.65
02/10/47	27.75	868.65
02/11/47	27.75	868.65
02/12/47	27.74	868.66
02/13/47	27.74	868.66
02/14/47	27.72	868.68
02/15/47	27.71	868.69
02/16/47	27.71	868.69
02/17/47	27.68	868.72
02/18/47	27.69	868.71
02/19/47	27.69	868.71
02/20/47	27.69	868.71
02/21/47	27.68	868.72
02/22/47	27.68	868.72
02/23/47	27.68	868.72
02/24/47	27.68	868.72
02/25/47	27.67	868.73
02/26/47	27.67	868.73
02/27/47	27.66	868.74
02/28/47	27.65	868.75
03/01/47	27.66	868.74
03/02/47	27.65	868.75
03/03/47	27.63	868.77
03/04/47	27.61	868.79
03/07/47	27.65	868.75
03/08/47	27.64	868.76
03/09/47	27.64	868.76
03/10/47	27.64	868.76
03/11/47	27.62	868.78
03/12/47	27.60	868.80
03/13/47	27.60	868.80
03/14/47	27.59	868.81
03/28/47	27.54	868.86
03/29/47	27.54	868.86
03/30/47	27.55	868.85
03/31/47	27.55	868.85
04/04/47	27.49	868.91
04/05/47	27.48	868.92
04/06/47	27.40	869.00
04/07/47	27.36	869.04
04/08/47	27.36	869.04
04/09/47	27.36	869.04
04/10/47	27.35	869.05
04/11/47	27.32	869.08
04/12/47	27.34	869.06
04/13/47	27.34	869.06
04/14/47	27.33	869.07
04/15/47	27.33	869.07
04/16/47	27.33	869.07
04/17/47	27.28	869.12
04/18/47	27.24	869.16
04/19/47	27.24	869.16
04/20/47	27.25	869.15
04/21/47	27.24	869.16
04/22/47	27.24	869.16
04/23/47	27.24	869.16
04/24/47	27.26	869.14
04/25/47	27.29	869.11
04/26/47	27.29	869.11
04/27/47	27.29	869.11
04/28/47	27.29	869.11
04/29/47	27.28	869.12
04/30/47	27.25	869.15
05/01/47	27.23	869.17
05/02/47	27.24	869.16
05/16/47	27.27	869.13
05/17/47	27.26	869.14
05/18/47	27.26	869.14
05/19/47	27.27	869.13
05/20/47	27.26	869.14
05/21/47	27.26	869.14
05/22/47	27.25	869.15
05/23/47	27.28	869.12
07/14/47	27.35	869.05
07/15/47	27.36	869.04
07/16/47	27.38	869.02
07/17/47	27.43	868.97
07/18/47	27.52	868.88
07/19/47	27.61	868.79
07/20/47	27.71	868.69
07/21/47	27.85	868.55
08/20/47	32.97	863.43
08/21/47	33.07	863.33
08/22/47	33.14	863.26
08/23/47	33.23	863.17
08/24/47	33.34	863.06
08/25/47	33.42	862.98
08/26/47	33.48	862.92
08/27/47	33.50	862.90
08/28/47	33.52	862.88
08/29/47	33.59	862.81
08/30/47	33.64	862.76
08/31/47	33.71	862.69
09/01/47	33.78	862.62
09/02/47	33.83	862.57
09/03/47	33.89	862.51
09/04/47	33.97	862.43
09/15/47	33.21	863.19
09/16/47	33.15	863.25
09/17/47	33.09	863.31
09/18/47	33.02	863.38
09/19/47	32.95	863.45
09/20/47	32.85	863.55
09/21/47	32.76	863.64
09/22/47	32.71	863.69
09/23/47	32.64	863.76
10/25/47	31.02	865.38
10/26/47	30.99	865.41
10/27/47	30.96	865.44
10/28/47	30.91	865.49
10/29/47	30.87	865.53
10/30/47	30.84	865.56
10/31/47	30.80	865.60
11/01/47	30.77	865.63
11/07/47	30.49	865.91
11/08/47	30.48	865.92
11/09/47	30.45	865.95
11/10/47	30.45	865.95
11/11/47	30.44	865.96
11/12/47	30.41	865.99
11/13/47	30.40	866.00
11/14/47	30.38	866.02
11/18/47	30.27	866.13
11/19/47	30.26	866.14
11/20/47	30.26	866.14
11/21/47	30.25	866.15
11/22/47	30.23	866.17
11/23/47	30.21	866.19
11/24/47	30.17	866.23
11/25/47	30.16	866.24
12/12/47	29.71	866.69
12/13/47	29.70	866.70
12/14/47	29.70	866.70
12/15/47	29.69	866.71
12/16/47	29.67	866.73
12/17/47	29.66	866.74
12/18/47	29.66	866.74
12/19/47	29.66	866.74
12/20/47	29.55	866.85
12/21/47	29.55	866.85
12/22/47	29.54	866.86
12/23/47	29.51	866.89
12/24/47	29.50	866.90
12/25/47	29.49	866.91
12/26/47	29.48	866.92
12/27/47	29.44	866.96
12/29/47	29.40	867.00
12/30/47	29.39	867.01
12/31/47	29.39	867.01
01/01/48	29.05	867.35
01/02/48	29.06	867.34
01/03/48	29.06	867.34
01/04/48	29.04	867.36
01/31/48	29.06	867.34
02/07/48	28.99	867.41
02/08/48	28.00	868.40
02/14/48	28.88	867.52
02/21/48	28.89	867.51
02/22/48	28.88	867.52
02/23/48	28.84	867.56
02/24/48	28.82	867.58
02/25/48	28.82	867.58
02/26/48	28.81	867.59
02/27/48	28.79	867.61
02/28/48	28.75	867.65
03/07/48	28.70	867.70
03/08/48	28.66	867.74
03/09/48	28.61	867.79
03/10/48	28.61	867.79
03/11/48	28.61	867.79
03/12/48	28.59	867.81
03/13/48	28.58	867.82
03/14/48	28.57	867.83
07/07/48	29.63	866.77
07/08/48	29.69	866.71
07/09/48	29.70	866.70
07/10/48	29.78	866.62
07/11/48	29.90	866.50
07/12/48	30.02	866.38
07/13/48	30.14	866.26
07/14/48	30.27	866.13
09/04/48	31.90	864.50
09/05/48	32.10	864.30
09/06/48	32.30	864.10
09/07/48	32.50	863.90
09/08/48	32.66	863.74
09/09/48	32.78	863.62
09/10/48	32.80	863.60
09/11/48	32.82	863.58
09/12/48	32.94	863.46
09/13/48	32.98	863.42
09/14/48	32.99	863.41
09/15/48	32.99	863.41
09/16/48	32.99	863.41
09/17/48	32.99	863.41
09/18/48	33.30	863.10
09/19/48	33.78	862.62
09/20/48	33.89	862.51
09/21/48	33.99	862.41
09/22/48	34.07	862.33
09/23/48	34.17	862.23
09/24/48	34.26	862.14
09/25/48	34.35	862.05
09/26/48	34.45	861.95
09/27/48	34.52	861.88
09/28/48	34.58	861.82
09/29/48	34.64	861.76
09/30/48	34.71	861.69
10/01/48	34.80	861.60
10/02/48	34.90	861.50
10/03/48	34.99	861.41
10/04/48	35.02	861.38
10/05/48	35.02	861.38
10/06/48	35.02	861.38
10/07/48	35.04	861.36
10/08/48	35.10	861.30
10/09/48	35.12	861.28
10/10/48	35.15	861.25
10/11/48	35.18	861.22
10/12/48	35.18	861.22
10/13/48	35.20	861.20
10/14/48	35.23	861.17
10/15/48	35.23	861.17
10/16/48	35.22	861.18
10/17/48	35.24	861.16
10/18/48	35.24	861.16
10/19/48	35.24	861.16
10/20/48	35.24	861.16
10/21/48	35.26	861.14
10/22/48	35.27	861.13
10/23/48	35.23	861.17
10/24/48	35.30	861.10
10/25/48	35.29	861.11
10/26/48	35.29	861.11
10/27/48	35.28	861.12
10/28/48	35.26	861.14
10/29/48	35.21	861.19
10/30/48	35.18	861.22
10/31/48	35.14	861.26
11/01/48	35.08	861.32
11/02/48	35.04	861.36
11/03/48	34.98	861.42
11/04/48	34.87	861.53
11/05/48	34.78	861.62
11/06/48	34.69	861.71
11/13/48	34.20	862.20
11/14/48	34.15	862.25
11/15/48	34.07	862.33
11/16/48	34.00	862.40
11/17/48	33.93	862.47
11/18/48	33.87	862.53
11/19/48	33.76	862.64
11/20/48	33.75	862.65
11/21/48	33.68	862.72
11/22/48	33.65	862.75
11/23/48	33.59	862.81
11/24/48	33.51	862.89
11/25/48	33.43	862.97
11/26/48	33.36	863.04
11/27/48	33.30	863.10
11/28/48	33.30	863.10
11/29/48	33.26	863.14
11/30/48	33.20	863.20
12/01/48	33.16	863.24
12/02/48	33.11	863.29
12/03/48	33.04	863.36
12/04/48	32.98	863.42
12/05/48	32.92	863.48
12/06/48	32.85	863.55
12/07/48	32.81	863.59
12/08/48	32.80	863.60
12/09/48	32.78	863.62
12/10/48	32.70	863.70
12/11/48	32.65	863.75
12/18/48	33.40	863.00
12/19/48	33.38	863.02
12/20/48	33.30	863.10
12/21/48	33.21	863.19
12/22/48	33.21	863.19
12/23/48	33.22	863.18
12/24/48	33.22	863.18
12/25/48	33.26	863.14
12/26/48	33.25	863.15
12/27/48	33.23	863.17
12/28/48	33.18	863.22
12/29/48	33.14	863.26
12/30/48	33.14	863.26
12/31/48	33.11	863.29
01/01/49	32.04	864.36
01/02/49	31.98	864.42
01/03/49	31.94	864.46
01/04/49	31.93	864.47
01/05/49	31.86	864.54
01/06/49	31.77	864.63
01/07/49	31.72	864.68
01/08/49	31.65	864.75
01/09/49	31.66	864.74
01/10/49	31.69	864.71
01/11/49	31.72	864.68
01/12/49	31.71	864.69
01/13/49	31.64	864.76
01/14/49	31.57	864.83
01/15/49	31.56	864.84
01/16/49	31.52	864.88
01/17/49	31.52	864.88

139-048-06CCD **(Continued)** MP Elev (msl,ft)=896.4

Fargo Aquifer SI (ft.)=0-180

Date	Depth to Water (ft)	WL Elev (msl, ft)	Date	Depth to Water (ft)	WL Elev (msl, ft)	Date	Depth to Water (ft)	WL Elev (msl, ft)	Date	Depth to Water (ft)	WL Elev (msl, ft)
01/18/49	31.49	864.91	04/23/49	30.55	865.85	07/13/49	30.43	865.97	10/24/49	34.29	862.11
01/19/49	31.48	864.92	04/24/49	30.56	865.84	07/14/49	30.43	865.97	10/25/49	34.25	862.15
01/20/49	31.48	864.92	04/25/49	30.56	865.84	07/15/49	30.43	865.97	10/26/49	34.18	862.22
01/21/49	31.47	864.93	04/26/49	30.56	865.84	07/16/49	30.30	866.10	10/27/49	34.14	862.26
01/22/49	31.46	864.94	04/27/49	30.57	865.83	07/17/49	30.30	866.10	10/28/49	34.07	862.33
01/23/49	31.40	865.00	04/28/49	30.57	865.83	07/18/49	30.28	866.12	10/29/49	34.01	862.39
01/24/49	31.37	865.03	04/29/49	30.56	865.84	07/19/49	30.30	866.10	10/30/49	33.94	862.46
01/25/49	31.36	865.04	04/30/49	30.60	865.80	07/20/49	30.31	866.09	10/31/49	33.92	862.48
01/26/49	31.35	865.05	05/01/49	30.60	865.80	07/21/49	30.31	866.09	11/01/49	33.86	862.54
01/27/49	31.31	865.09	05/02/49	30.58	865.82	07/22/49	30.31	866.09	11/02/49	33.82	862.58
01/28/49	31.27	865.13	05/03/49	30.54	865.86	08/05/49	30.45	865.95	11/03/49	33.81	862.59
01/29/49	31.23	865.17	05/04/49	30.52	865.88	08/06/49	30.47	865.93	11/04/49	33.76	862.64
01/30/49	31.48	864.92	05/05/49	30.52	865.88	08/07/49	30.48	865.92	11/05/49	33.67	862.73
01/31/49	31.42	864.98	05/06/49	30.53	865.87	08/08/49	30.48	865.92	11/06/49	33.64	862.76
02/01/49	31.39	865.01	05/07/49	30.54	865.86	08/09/49	30.48	865.92	11/07/49	33.59	862.81
02/02/49	31.39	865.01	05/08/49	30.54	865.86	08/10/49	30.49	865.91	11/08/49	33.52	862.88
02/03/49	31.38	865.02	05/09/49	30.54	865.86	08/11/49	30.53	865.87	11/09/49	33.47	862.93
02/04/49	31.36	865.04	05/10/49	30.54	865.86	08/12/49	30.68	865.72	11/10/49	33.41	862.99
02/05/49	31.31	865.09	05/11/49	30.54	865.86	08/13/49	30.67	865.73	11/11/49	33.38	863.02
02/06/49	31.29	865.11	05/12/49	30.53	865.87	08/14/49	30.77	865.63	11/12/49	33.36	863.04
02/07/49	31.25	865.15	05/13/49	30.53	865.87	08/15/49	30.87	865.53	11/13/49	33.34	863.06
02/08/49	31.21	865.19	05/14/49	30.52	865.88	08/16/49	30.97	865.43	11/14/49	33.31	863.09
02/09/49	31.20	865.20	05/15/49	30.52	865.88	08/17/49	31.01	865.39	11/15/49	33.28	863.12
02/10/49	31.22	865.18	05/16/49	30.52	865.88	08/18/49	31.13	865.27	11/16/49	33.25	863.15
02/11/49	31.22	865.18	05/17/49	30.51	865.89	08/19/49	31.35	865.05	11/17/49	33.23	863.17
02/12/49	31.16	865.24	05/18/49	30.49	865.91	08/20/49	31.49	864.91	11/18/49	33.22	863.18
02/13/49	31.00	865.40	05/19/49	30.50	865.90	08/21/49	31.52	864.88	11/19/49	33.11	863.29
02/14/49	31.00	865.40	05/20/49	30.50	865.90	08/22/49	31.63	864.77	11/20/49	33.10	863.30
02/15/49	30.94	865.46	05/21/49	30.50	865.90	08/23/49	31.83	864.57	11/21/49	33.08	863.32
02/19/49	30.90	865.50	05/22/49	30.48	865.92	08/24/49	31.96	864.44	11/22/49	33.08	863.32
02/20/49	30.91	865.49	05/23/49	30.49	865.91	08/25/49	32.10	864.30	11/23/49	33.02	863.38
02/21/49	30.91	865.49	05/24/49	30.51	865.89	08/26/49	32.27	864.13	11/24/49	32.99	863.41
02/22/49	30.89	865.51	05/25/49	30.51	865.89	08/27/49	32.40	864.00	11/25/49	32.94	863.46
02/23/49	30.85	865.55	05/26/49	30.52	865.88	08/28/49	32.47	863.93	12/02/49	32.64	863.76
02/24/49	30.80	865.60	05/27/49	30.53	865.87	08/29/49	32.49	863.91	12/03/49	32.64	863.76
02/25/49	30.80	865.60	05/28/49	30.53	865.87	09/02/49	32.98	863.42	12/04/49	32.63	863.77
02/26/49	30.80	865.60	05/29/49	30.52	865.88	09/03/49	33.06	863.34	12/05/49	32.63	863.77
02/27/49	30.78	865.62	05/30/49	30.51	865.89	09/04/49	33.17	863.23	12/06/49	32.62	863.78
02/28/49	30.77	865.63	05/31/49	30.51	865.89	09/05/49	33.27	863.13	12/07/49	32.57	863.83
03/01/49	30.77	865.63	06/01/49	30.48	865.92	09/06/49	33.34	863.06	12/08/49	32.56	863.84
03/02/49	30.73	865.67	06/02/49	30.46	865.94	09/07/49	33.42	862.98	12/09/49	32.56	863.84
03/03/49	30.71	865.69	06/03/49	30.46	865.94	09/08/49	33.49	862.91	12/10/49	32.51	863.89
03/04/49	30.69	865.71	06/04/49	30.48	865.92	09/09/49	33.56	862.84	12/11/49	32.44	863.96
03/05/49	30.65	865.75	06/05/49	30.48	865.92	09/10/49	33.59	862.81	12/12/49	32.36	864.04
03/06/49	30.66	865.74	06/06/49	30.50	865.90	09/11/49	33.64	862.76	12/13/49	32.37	864.03
03/07/49	30.66	865.74	06/07/49	30.52	865.88	09/12/49	33.68	862.72	12/14/49	32.37	864.03
03/08/49	30.65	865.75	06/08/49	30.52	865.88	09/13/49	33.77	862.63	12/15/49	32.37	864.03
03/09/49	30.67	865.73	06/09/49	30.52	865.88	09/14/49	33.94	862.46	12/16/49	32.33	864.07
03/10/49	30.67	865.73	06/10/49	30.52	865.88	09/15/49	33.89	862.51	12/17/49	32.26	864.14
03/11/49	30.67	865.73	06/11/49	30.51	865.89	09/16/49	33.93	862.47	12/18/49	32.23	864.17
03/12/49	30.66	865.74	06/12/49	30.50	865.90	09/17/49	33.98	862.42	12/19/49	32.23	864.17
03/13/49	30.66	865.74	06/13/49	30.50	865.90	09/18/49	34.14	862.26	12/20/49	32.21	864.19
03/14/49	30.67	865.73	06/14/49	30.48	865.92	09/19/49	34.20	862.20	12/21/49	32.19	864.21
03/15/49	30.67	865.73	06/15/49	30.48	865.92	09/20/49	34.24	862.16	12/22/49	32.17	864.23
03/16/49	30.67	865.73	06/16/49	30.48	865.92	09/21/49	34.29	862.11	12/23/49	32.16	864.24
03/17/49	30.65	865.75	06/17/49	30.47	865.93	09/22/49	34.33	862.07	12/24/49	32.17	864.23
03/18/49	30.63	865.77	06/18/49	30.17	866.23	09/23/49	34.39	862.01	12/25/49	32.09	864.31
03/19/49	30.65	865.75	06/19/49	30.49	865.91	10/01/49	34.65	861.75	12/26/49	32.07	864.33
03/20/49	30.98	865.42	06/20/49	30.49	865.91	10/02/49	34.68	861.72	12/27/49	32.05	864.35
03/21/49	30.93	865.47	06/21/49	30.48	865.92	10/03/49	34.72	861.68	12/28/49	32.03	864.37
03/22/49	30.90	865.50	06/22/49	30.48	865.92	10/04/49	34.76	861.64	12/29/49	32.03	864.37
03/23/49	30.90	865.50	06/23/49	30.46	865.94	10/05/49	34.78	861.62	12/30/49	32.03	864.37
03/24/49	30.90	865.50	06/24/49	30.44	865.96	10/06/49	34.78	861.62	12/31/49	32.00	864.40
03/25/49	30.87	865.53	06/25/49	30.39	866.01	10/07/49	34.84	861.56			
03/26/49	30.85	865.55	06/26/49	30.40	866.00	10/08/49	34.88	861.52	01/01/50	32.00	864.40
03/27/49	31.52	864.88	06/27/49	30.39	866.01	10/09/49	34.92	861.48	01/02/50	31.97	864.43
03/28/49	31.50	864.90	06/28/49	30.11	866.29	10/10/49	34.92	861.48	01/03/50	31.94	864.46
03/29/49	31.54	864.86	06/29/49	30.41	865.99	10/11/49	34.86	861.54	01/04/50	31.90	864.50
03/30/49	31.56	864.84	06/30/49	30.40	866.00	10/12/49	34.85	861.55	01/05/50	31.87	864.53
03/31/49	31.57	864.83	07/02/49	30.53	865.87	10/13/49	34.86	861.54	01/06/50	31.86	864.54
04/01/49	31.58	864.82	07/03/49	30.53	865.87	10/14/49	34.86	861.54	01/07/50	31.83	864.57
04/02/49	31.58	864.82	07/04/49	30.52	865.88	10/15/49	34.82	861.58	01/14/50	31.64	864.76
04/15/49	30.57	865.83	07/05/49	30.52	865.88	10/16/49	34.76	861.64	01/15/50	31.64	864.76
04/16/49	30.57	865.83	07/06/49	30.49	865.91	10/17/49	34.70	861.70	01/16/50	31.61	864.79
04/17/49	30.56	865.84	07/07/49	30.47	865.93	10/18/49	34.67	861.73	01/17/50	31.62	864.78
04/18/49	30.56	865.84	07/08/49	30.54	865.86	10/19/49	34.62	861.78	01/18/50	31.61	864.79
04/19/49	30.56	865.84	07/09/49	30.44	865.96	10/20/49	34.55	861.85	01/19/50	31.59	864.81
04/20/49	30.56	865.84	07/10/49	30.46	865.94	10/21/49	34.49	861.91	01/20/50	31.59	864.81
04/21/49	30.54	865.86	07/11/49	30.46	865.94	10/22/49	34.32	862.08	01/21/50	31.59	864.81
04/22/49	30.53	865.87	07/12/49	30.45	865.95	10/23/49	34.29	862.11	01/22/50	31.54	864.86

139-048-06CCD **(Continued)** MP Elev (msl,ft)=896.4

Fargo Aquifer SI (ft.)=0-180

Date	Depth to Water (ft)	WL Elev (msl, ft)	Date	Depth to Water (ft)	WL Elev (msl, ft)	Date	Depth to Water (ft)	WL Elev (msl, ft)	Date	Depth to Water (ft)	WL Elev (msl, ft)
01/23/50	31.53	864.87	04/24/50	30.65	865.75	07/14/50	31.00	865.40	12/13/50	31.63	864.77
02/04/50	31.35	865.05	04/25/50	30.61	865.79	07/15/50	31.00	865.40	12/14/50	31.63	864.77
02/05/50	31.34	865.06	04/26/50	30.60	865.80	07/22/50	31.33	865.07	12/15/50	31.60	864.80
02/06/50	31.32	865.08	04/27/50	30.61	865.79	07/23/50	31.40	865.00	12/23/50	31.51	864.89
02/07/50	31.32	865.08	04/28/50	30.63	865.77	07/24/50	31.49	864.91	12/24/50	31.52	864.88
02/08/50	31.32	865.08	04/29/50	30.64	865.76	07/25/50	31.57	864.83	12/25/50	31.52	864.88
02/09/50	31.31	865.09	04/30/50	30.62	865.78	07/26/50	31.06	865.34	12/26/50	31.52	864.88
02/10/50	31.31	865.09	05/01/50	30.61	865.79	07/27/50	31.72	864.68	12/27/50	31.52	864.88
02/11/50	31.31	865.09	05/02/50	30.59	865.81	07/28/50	31.79	864.61	12/28/50	31.46	864.94
02/12/50	31.29	865.11	05/03/50	30.55	865.85	07/29/50	31.84	864.56	12/29/50	31.43	864.97
02/13/50	31.29	865.11	05/04/50	30.53	865.87	07/31/50	32.01	864.39	12/30/50	31.42	864.98
02/14/50	31.29	865.11	05/05/50	30.52	865.88	08/01/50	32.05	864.35			
02/15/50	31.28	865.12	05/06/50	30.34	866.06	08/02/50	32.09	864.31	01/06/51	31.40	865.00
02/16/50	31.26	865.14	05/07/50	30.50	865.90	08/05/50	32.45	863.95	01/07/51	31.40	865.00
02/17/50	31.24	865.16	05/08/50	30.57	865.83	08/12/50	32.98	863.42	01/08/51	31.38	865.02
02/18/50	31.25	865.15	05/09/50	30.55	865.85	08/13/50	32.98	863.42	01/09/51	31.33	865.07
02/19/50	31.25	865.15	05/10/50	30.45	865.95	08/14/50	32.98	863.42	01/10/51	31.29	865.11
02/20/50	31.25	865.15	05/11/50	30.45	865.95	08/15/50	32.99	863.41	01/11/51	31.29	865.11
02/21/50	31.23	865.17	05/12/50	30.45	865.95	08/16/50	32.99	863.41	01/12/51	31.28	865.12
02/22/50	31.20	865.20	05/13/50	30.43	865.97	08/17/50	32.99	863.41	01/13/51	31.28	865.12
02/23/50	31.16	865.24	05/14/50	30.42	865.98	08/18/50	32.99	863.41	01/14/51	31.27	865.13
02/24/50	31.15	865.25	05/15/50	30.40	866.00	08/19/50	32.99	863.41	01/15/51	31.24	865.16
02/25/50	31.16	865.24	05/16/50	30.40	866.00	08/25/50	33.00	863.40	01/16/51	31.24	865.16
02/26/50	31.15	865.25	05/17/50	30.40	866.00	09/02/50	35.04	861.36	01/17/51	31.19	865.21
02/27/50	31.15	865.25	05/18/50	30.40	866.00	09/03/50	35.10	861.30	01/18/51	31.16	865.24
02/28/50	31.10	865.30	05/19/50	30.40	866.00	09/04/50	35.11	861.29	01/19/51	31.22	865.18
03/01/50	31.10	865.30	05/20/50	30.39	866.01	09/05/50	35.11	861.29	01/20/51	31.26	865.14
03/02/50	31.11	865.29	05/21/50	30.69	865.71	09/06/50	35.11	861.29	01/21/51	31.28	865.12
03/03/50	31.11	865.29	05/22/50	30.39	866.01	09/07/50	35.09	861.31	01/22/51	31.28	865.12
03/04/50	31.09	865.31	05/23/50	30.38	866.02	09/08/50	35.07	861.33	01/23/51	31.21	865.19
03/05/50	31.04	865.36	05/24/50	30.37	866.03	09/09/50	35.06	861.34	01/24/51	31.21	865.19
03/06/50	31.04	865.36	05/25/50	30.43	865.97	09/23/50	33.30	863.10	01/25/51	31.22	865.18
03/07/50	31.01	865.39	05/26/50	30.45	865.95	09/24/50	33.29	863.11	01/26/51	31.22	865.18
03/08/50	31.02	865.38	05/27/50	30.50	865.90	09/25/50	33.25	863.15	01/27/51	31.20	865.20
03/09/50	31.04	865.36	05/28/50	30.50	865.90	09/26/50	33.21	863.19	01/28/51	31.21	865.19
03/10/50	31.04	865.36	05/29/50	30.50	865.90	09/27/50	33.16	863.24	01/29/51	31.21	865.19
03/11/50	31.06	865.34	05/30/50	30.48	865.92	09/28/50	33.12	863.28	01/30/51	31.21	865.19
03/12/50	31.06	865.34	05/31/50	30.48	865.92	09/29/50	33.11	863.29	01/31/51	31.19	865.21
03/13/50	31.05	865.35	06/01/50	30.48	865.92	09/30/50	33.09	863.31	02/01/51	31.18	865.22
03/14/50	31.02	865.38	06/02/50	30.50	865.90	10/01/50	33.04	863.36	02/02/51	31.10	865.30
03/15/50	30.99	865.41	06/03/50	30.53	865.87	10/02/50	33.02	863.38	02/03/51	31.10	865.30
03/16/50	30.99	865.41	06/04/50	30.53	865.87	10/03/50	32.98	863.42	02/04/51	31.08	865.32
03/17/50	30.98	865.42	06/05/50	30.54	865.86	10/04/50	32.97	863.43	02/05/51	31.09	865.31
03/18/50	30.99	865.41	06/06/50	30.53	865.87	10/05/50	32.91	863.49	02/06/51	31.07	865.33
03/19/50	31.00	865.40	06/07/50	30.53	865.87	10/06/50	32.89	863.51	02/07/51	31.09	865.31
03/20/50	31.00	865.40	06/08/50	30.55	865.85	10/07/50	32.79	863.61	02/08/51	31.10	865.30
03/21/50	30.98	865.42	06/09/50	30.56	865.84	10/14/50	32.66	863.74	02/09/51	31.10	865.30
03/22/50	30.95	865.45	06/10/50	30.58	865.82	10/15/50	32.65	863.75	02/10/51	31.09	865.31
03/23/50	30.93	865.47	06/11/50	30.59	865.81	10/16/50	32.62	863.78	02/11/51	31.05	865.35
03/24/50	30.89	865.51	06/12/50	30.59	865.81	10/17/50	32.59	863.81	02/12/51	31.06	865.34
03/25/50	30.88	865.52	06/13/50	30.58	865.82	10/18/50	32.57	863.83	02/13/51	31.08	865.32
03/26/50	30.89	865.51	06/14/50	30.60	865.80	10/19/50	32.55	863.85	02/14/51	31.09	865.31
03/27/50	30.88	865.52	06/15/50	30.61	865.79	10/20/50	32.55	863.85	02/15/51	31.09	865.31
03/28/50	30.78	865.62	06/16/50	30.64	865.76	10/21/50	32.54	863.86	02/16/51	31.07	865.33
03/29/50	30.82	865.58	06/17/50	30.67	865.73	10/22/50	32.50	863.90	02/17/51	31.03	865.37
03/30/50	30.84	865.56	06/18/50	30.69	865.71	10/23/50	32.50	863.90	02/18/51	31.01	865.39
03/31/50	30.84	865.56	06/19/50	30.69	865.71	10/24/50	32.48	863.92	02/19/51	30.99	865.41
04/01/50	30.84	865.56	06/20/50	30.68	865.72	10/25/50	32.47	863.93	02/20/51	31.00	865.40
04/02/50	30.82	865.58	06/22/50	30.69	865.71	10/26/50	32.46	863.94	02/21/51	31.00	865.40
04/03/50	30.76	865.64	06/23/50	30.67	865.73	10/27/50	32.45	863.95	02/22/51	31.02	865.38
04/04/50	30.77	865.63	06/24/50	30.72	865.68	10/28/50	32.44	863.96	02/23/51	31.02	865.38
04/05/50	30.80	865.60	06/25/50	30.73	865.67	10/29/50	32.16	864.24	02/24/51	31.02	865.38
04/06/50	30.81	865.59	06/26/50	30.75	865.65	10/30/50	32.17	864.23	02/25/51	30.99	865.41
04/07/50	30.79	865.61	06/27/50	30.79	865.61	10/31/50	32.15	864.25	02/26/51	30.95	865.45
04/08/50	31.80	864.60	06/28/50	30.82	865.58	11/01/50	32.15	864.25	02/27/51	30.97	865.43
04/09/50	31.79	864.61	06/29/50	30.90	865.50	11/02/50	32.14	864.26	02/28/51	30.97	865.43
04/10/50	31.83	864.57	06/30/50	30.92	865.48	11/03/50	32.14	864.26	03/01/51	30.95	865.45
04/11/50	31.79	864.61	07/01/50	30.92	865.48	11/04/50	32.14	864.26	03/02/51	30.91	865.49
04/12/50	31.81	864.59	07/02/50	30.89	865.51	11/25/50	31.91	864.49	03/06/51	30.85	865.55
04/13/50	31.82	864.58	07/03/50	30.89	865.51	11/26/50	31.91	864.49	03/07/51	30.86	865.54
04/14/50	31.82	864.58	07/04/50	30.91	865.49	11/27/50	31.90	864.50	03/08/51	30.87	865.53
04/15/50	31.73	864.67	07/05/50	30.93	865.47	11/28/50	31.87	864.53	03/09/51	30.88	865.52
04/16/50	31.72	864.68	07/06/50	30.94	865.46	11/29/50	31.85	864.55	03/10/51	30.88	865.52
04/17/50	31.70	864.70	07/07/50	30.94	865.46	11/30/50	31.82	864.58	03/11/51	30.87	865.53
04/18/50	31.67	864.73	07/08/50	30.94	865.46	12/01/50	31.79	864.61	03/12/51	30.88	865.52
04/19/50	31.67	864.73	07/09/50	30.96	865.44	12/02/50	31.76	864.64	03/13/51	30.88	865.52
04/20/50	31.68	864.72	07/10/50	30.98	865.42	12/09/50	31.67	864.73	03/14/51	30.84	865.56
04/21/50	31.68	864.72	07/11/50	30.98	865.42	12/10/50	31.67	864.73	03/15/51	30.81	865.59
04/22/50	31.68	864.72	07/12/50	30.97	865.43	12/11/50	31.64	864.76	03/16/51	30.78	865.62
04/23/50	30.64	865.76	07/13/50	31.00	865.40	12/12/50	31.63	864.77	03/17/51	30.75	865.65

139-048-06CCD **(Continued)** MP Elev (msl,ft)=896.4

Fargo Aquifer SI (ft.)=0-180

Date	Depth to Water (ft)	WL Elev (msl, ft)	Date	Depth to Water (ft)	WL Elev (msl, ft)	Date	Depth to Water (ft)	WL Elev (msl, ft)	Date	Depth to Water (ft)	WL Elev (msl, ft)
03/18/51	30.75	865.65	07/02/51	31.25	865.15	10/09/51	32.84	863.56	01/16/52	30.83	865.57
03/19/51	30.74	865.66	07/03/51	31.25	865.15	10/10/51	32.84	863.56	01/17/52	30.82	865.58
03/20/51	30.74	865.66	07/04/51	31.25	865.15	10/11/51	32.78	863.62	01/18/52	30.81	865.59
03/21/51	30.73	865.67	07/05/51	31.25	865.15	10/12/51	32.73	863.67	01/19/52	30.79	865.61
03/30/51	30.73	865.67	07/06/51	31.21	865.19	10/13/51	32.68	863.72	01/20/52	30.82	865.58
04/01/51	30.71	865.69	07/07/51	31.19	865.21	10/14/51	32.63	863.77	01/21/52	30.82	865.58
04/02/51	30.73	865.67	07/08/51	31.18	865.22	10/15/51	32.59	863.81	01/22/52	30.78	865.62
04/03/51	30.73	865.67	07/09/51	31.17	865.23	10/16/51	32.54	863.86	01/23/52	30.77	865.63
04/04/51	30.73	865.67	07/10/51	31.17	865.23	10/17/51	32.55	863.85	01/24/52	30.77	865.63
04/05/51	30.73	865.67	07/11/51	31.20	865.20	10/18/51	32.55	863.85	01/25/52	30.73	865.67
04/06/51	30.73	865.67	07/12/51	31.20	865.20	10/19/51	32.54	863.86	01/26/52	30.69	865.71
04/07/51	30.71	865.69	07/13/51	31.20	865.20	10/20/51	32.51	863.89	01/27/52	30.70	865.70
04/08/51	30.70	865.70	07/14/51	31.20	865.20	10/21/51	32.45	863.95	01/28/52	30.71	865.69
04/09/51	30.69	865.71	07/15/51	31.19	865.21	10/22/51	32.41	863.99	01/29/52	30.71	865.69
04/10/51	30.66	865.74	07/16/51	31.18	865.22	10/23/51	32.38	864.02	01/30/52	30.69	865.71
04/11/51	30.66	865.74	07/17/51	31.18	865.22	10/24/51	32.36	864.04	01/31/52	30.64	865.76
04/12/51	30.66	865.74	07/18/51	31.18	865.22	10/25/51	32.32	864.08	02/01/52	30.63	865.77
04/13/51	30.65	865.75	07/19/51	31.18	865.22	10/26/51	32.28	864.12	02/02/52	30.63	865.77
04/14/51	30.63	865.77	07/20/51	31.18	865.22	10/27/51	32.26	864.14	02/03/52	30.62	865.78
04/15/51	30.60	865.80	07/21/51	31.15	865.25	10/28/51	32.23	864.17	02/04/52	30.62	865.78
04/16/51	30.61	865.79	07/22/51	31.16	865.24	10/29/51	32.19	864.21	02/05/52	30.62	865.78
04/17/51	30.61	865.79	07/23/51	31.17	865.23	10/30/51	32.14	864.26	02/06/52	30.62	865.78
04/18/51	30.61	865.79	07/24/51	31.17	865.23	10/31/51	32.11	864.29	02/07/52	30.61	865.79
04/19/51	30.63	865.77	07/25/51	31.17	865.23	11/01/51	32.10	864.30	02/08/52	30.65	865.75
04/20/51	30.65	865.75	07/26/51	31.16	865.24	11/02/51	32.09	864.31	02/09/52	30.65	865.75
04/21/51	30.65	865.75	07/27/51	31.16	865.24	11/03/51	32.04	864.36	02/10/52	30.63	865.77
04/22/51	30.63	865.77	07/28/51	31.18	865.22	11/04/51	31.99	864.41	02/11/52	30.61	865.79
04/23/51	30.63	865.77	08/04/51	31.54	864.86	11/05/51	31.99	864.41	02/12/52	30.61	865.79
04/24/51	30.63	865.77	08/05/51	31.56	864.84	11/06/51	31.98	864.42	02/13/52	30.62	865.78
04/25/51	30.62	865.78	08/06/51	31.63	864.77	11/07/51	31.97	864.43	02/14/52	30.65	865.75
04/26/51	30.62	865.78	08/07/51	31.67	864.73	11/08/51	31.94	864.46	02/15/52	30.65	865.75
04/27/51	30.62	865.78	08/08/51	31.72	864.68	11/09/51	31.88	864.52	02/16/52	30.64	865.76
04/28/51	30.58	865.82	08/09/51	31.79	864.61	11/10/51	31.87	864.53	02/17/52	30.63	865.77
04/29/51	30.57	865.83	08/10/51	31.83	864.57	11/11/51	31.87	864.53	02/18/52	30.62	865.78
04/30/51	30.56	865.84	08/11/51	31.91	864.49	11/12/51	31.82	864.58	02/19/52	30.62	865.78
05/01/51	30.55	865.85	08/12/51	31.96	864.44	11/13/51	31.76	864.64	02/20/52	30.61	865.79
05/02/51	30.57	865.83	08/13/51	32.01	864.39	11/14/51	31.73	864.67	02/21/52	30.60	865.80
05/03/51	30.59	865.81	08/14/51	32.05	864.35	11/15/51	31.70	864.70	02/22/52	30.60	865.80
05/04/51	30.61	865.79	08/15/51	32.08	864.32	11/16/51	31.75	864.65	02/23/52	30.57	865.83
05/05/51	30.62	865.78	08/16/51	32.13	864.27	11/17/51	31.77	864.63	02/24/52	30.57	865.83
05/11/51	30.69	865.71	08/17/51	32.15	864.25	11/18/51	31.77	864.63	02/25/52	30.57	865.83
05/12/51	30.69	865.71	08/18/51	32.19	864.21	11/19/51	31.76	864.64	02/26/52	30.57	865.83
05/13/51	30.69	865.71	08/19/51	32.23	864.17	11/20/51	31.74	864.66	02/27/52	30.53	865.87
05/14/51	30.70	865.70	08/20/51	32.25	864.15	11/21/51	31.67	864.73	02/28/52	30.51	865.89
05/15/51	30.77	865.63	08/21/51	32.30	864.10	11/22/51	31.65	864.75	02/29/52	30.53	865.87
05/16/51	30.72	865.68	08/22/51	32.36	864.04	11/23/51	31.65	864.75	03/07/52	30.52	865.88
05/17/51	30.74	865.66	08/23/51	32.37	864.03	11/24/51	31.65	864.75	03/14/52	30.45	865.95
05/19/51	30.74	865.66	08/24/51	32.39	864.01	11/25/51	31.64	864.76	03/15/52	30.46	865.94
05/20/51	30.75	865.65	08/25/51	32.40	864.00	11/26/51	31.62	864.78	03/16/52	30.47	865.93
05/22/51	30.77	865.63	08/26/51	32.41	863.99	11/27/51	31.60	864.80	03/17/52	30.46	865.94
05/23/51	30.77	865.63	08/27/51	32.43	863.97	11/28/51	31.57	864.83	03/18/52	30.42	865.98
05/24/51	30.76	865.64	08/28/51	32.43	863.97	11/29/51	31.54	864.86	03/19/52	30.38	866.02
05/25/51	30.74	865.66	08/29/51	32.48	863.92	11/30/51	31.53	864.87	03/20/52	30.36	866.04
05/26/51	30.76	865.64	08/30/51	32.48	863.92	12/01/51	31.51	864.89	03/22/52	30.42	865.98
06/05/51	31.17	865.23	08/31/51	32.50	863.90	12/02/51	31.50	864.90	03/23/52	30.41	865.99
06/06/51	31.20	865.20	09/01/51	32.53	863.87	12/03/51	31.46	864.94	03/24/52	30.37	866.03
06/07/51	31.20	865.20	09/02/51	32.56	863.84	12/04/51	31.41	864.99	03/25/52	30.36	866.04
06/08/51	31.21	865.19	09/03/51	32.59	863.81	12/05/51	31.40	865.00	03/26/52	30.38	866.02
06/09/51	31.24	865.16	09/04/51	32.61	863.79	12/06/51	31.38	865.02	03/27/52	30.38	866.02
06/10/51	31.24	865.16	09/05/51	32.61	863.79	12/07/51	31.36	865.04	03/28/52	30.38	866.02
06/11/51	31.24	865.16	09/06/51	32.63	863.77	12/08/51	31.36	865.04	03/29/52	30.36	866.04
06/12/51	31.24	865.16	09/07/51	32.78	863.62	12/09/51	31.37	865.03	03/30/52	30.35	866.05
06/13/51	31.24	865.16	09/08/51	32.84	863.56	12/10/51	31.37	865.03	03/31/52	30.34	866.06
06/14/51	31.25	865.15	09/09/51	32.86	863.54	12/11/51	31.34	865.06	04/01/52	30.33	866.07
06/15/51	31.25	865.15	09/10/51	32.89	863.51	12/12/51	31.32	865.08	04/02/52	30.34	866.06
06/16/51	31.25	865.15	09/11/51	32.90	863.50	12/13/51	31.32	865.08	04/03/52	30.34	866.06
06/17/51	31.26	865.14	09/12/51	32.91	863.49	12/14/51	31.32	865.08	04/04/52	30.37	866.03
06/18/51	31.27	865.13	09/13/51	32.93	863.47				04/05/52	30.38	866.02
06/19/51	31.27	865.13	09/14/51	32.97	863.43	01/04/52	31.00	865.40	04/06/52	30.39	866.01
06/20/51	31.26	865.14	09/28/51	33.02	863.38	01/05/52	30.98	865.42	04/07/52	30.38	866.02
06/21/51	31.26	865.14	09/29/51	33.02	863.38	01/06/52	30.98	865.42	04/08/52	30.33	866.07
06/22/51	31.27	865.13	09/30/51	33.02	863.38	01/07/52	30.96	865.44	04/09/52	30.34	866.06
06/23/51	31.28	865.12	10/01/51	33.01	863.39	01/08/52	30.92	865.48	04/10/52	30.35	866.05
06/24/51	31.29	865.11	10/02/51	32.99	863.41	01/09/52	30.91	865.49	04/11/52	30.34	866.06
06/25/51	31.29	865.11	10/03/51	32.94	863.46	01/10/52	30.91	865.49	04/12/52	30.32	866.08
06/26/51	31.28	865.12	10/04/51	32.92	863.48	01/11/52	30.88	865.52	04/13/52	30.30	866.10
06/28/51	31.24	865.16	10/05/51	32.90	863.50	01/12/52	30.89	865.51	04/14/52	30.29	866.11
06/29/51	31.24	865.16	10/06/51	32.90	863.50	01/13/52	30.89	865.51	04/15/52	30.27	866.13
06/30/51	31.25	865.15	10/07/51	32.90	863.50	01/14/52	30.86	865.54	04/16/52	30.24	866.16
07/01/51	31.25	865.15	10/08/51	32.88	863.52	01/15/52	30.83	865.57	04/17/52	30.21	866.19

139-048-06CCD **(Continued)** MP Elev (msl,ft)=896.4

Fargo Aquifer SI (ft.)=0-180

Date	Depth to Water (ft)	WL Elev (msl. ft)	Date	Depth to Water (ft)	WL Elev (msl. ft)	Date	Depth to Water (ft)	WL Elev (msl. ft)	Date	Depth to Water (ft)	WL Elev (msl. ft)
04/18/52	30.17	866.23	07/23/52	30.20	866.20	10/17/52	30.84	865.56	02/17/53	29.85	866.55
04/19/52	30.09	866.31	07/24/52	30.21	866.19	10/18/52	30.84	865.56	02/18/53	29.85	866.55
04/20/52	30.06	866.34	07/25/52	30.21	866.19	10/19/52	30.85	865.55	02/19/53	29.84	866.56
04/21/52	30.04	866.36	07/26/52	30.21	866.19	10/20/52	30.87	865.53	02/20/53	29.85	866.55
04/22/52	30.03	866.37	07/27/52	30.24	866.16	10/21/52	30.86	865.54	02/21/53	29.85	866.55
04/23/52	30.04	866.36	07/28/52	30.24	866.16	10/22/52	30.84	865.56	02/22/53	29.84	866.56
04/24/52	30.04	866.36	07/29/52	30.24	866.16	10/23/52	30.83	865.57	02/23/53	29.82	866.58
04/25/52	30.04	866.36	07/30/52	30.25	866.15	10/24/52	30.82	865.58	02/24/53	29.83	866.57
04/26/52	30.04	866.36	07/31/52	30.25	866.15	10/28/52	30.79	865.61	02/25/53	29.83	866.57
04/27/52	30.03	866.37	08/02/52	30.25	866.15	10/29/52	30.79	865.61	02/26/53	29.81	866.59
04/28/52	30.02	866.38	08/03/52	30.25	866.15	10/30/52	30.77	865.63	02/27/53	29.81	866.59
04/29/52	30.03	866.37	08/04/52	30.23	866.17	10/31/52	30.72	865.68	02/28/53	29.79	866.61
04/30/52	30.04	866.36	08/05/52	30.23	866.17	11/01/52	30.70	865.70	03/01/53	29.81	866.59
05/01/52	30.05	866.35	08/06/52	30.24	866.16	11/02/52	30.67	865.73	03/02/53	29.81	866.59
05/02/52	30.05	866.35	08/07/52	30.25	866.15	11/03/52	30.66	865.74	03/03/53	29.79	866.61
05/03/52	30.05	866.35	08/08/52	30.24	866.16	11/04/52	30.66	865.74	03/04/53	29.76	866.64
05/04/52	30.05	866.35	08/09/52	30.24	866.16	11/05/52	30.65	865.75	03/05/53	29.76	866.64
05/05/52	30.05	866.35	08/10/52	30.24	866.16	11/08/52	30.64	865.76	03/06/53	29.80	866.60
05/06/52	30.08	866.32	08/11/52	30.25	866.15	11/09/52	30.66	865.74	03/07/53	29.81	866.59
05/07/52	30.08	866.32	08/12/52	30.26	866.14	11/10/52	30.66	865.74	03/08/53	29.81	866.59
05/08/52	30.09	866.31	08/13/52	30.26	866.14	11/11/52	30.64	865.76	03/09/53	29.81	866.59
05/09/52	30.10	866.30	08/14/52	30.26	866.14	11/12/52	30.62	865.78	03/10/53	29.79	866.61
05/10/52	30.15	866.25	08/15/52	30.26	866.14	11/13/52	30.61	865.79	03/11/53	29.78	866.62
05/11/52	30.18	866.22	08/16/52	30.28	866.12	11/14/52	30.58	865.82	03/12/53	29.75	866.65
05/12/52	30.18	866.22	08/17/52	30.30	866.10	11/15/52	30.50	865.90	03/13/53	29.76	866.64
05/13/52	30.18	866.22	08/18/52	30.31	866.09	11/16/52	30.49	865.91	03/14/53	29.76	866.64
05/14/52	30.17	866.23	08/19/52	30.31	866.09	11/17/52	30.48	865.92	03/15/53	29.75	866.65
05/16/52	30.17	866.23	08/20/52	30.31	866.09	11/18/52	30.48	865.92	03/16/53	29.74	866.66
05/17/52	30.19	866.21	08/21/52	30.33	866.07	11/19/52	30.41	865.99	03/17/53	29.74	866.66
05/18/52	30.22	866.18	08/22/52	30.36	866.04	11/20/52	30.39	866.01	03/18/53	29.72	866.68
05/19/52	30.22	866.18	08/23/52	30.39	866.01	11/21/52	30.40	866.00	03/19/53	29.71	866.69
05/20/52	30.22	866.18	08/24/52	30.42	865.98	11/22/52	30.46	865.94	03/20/53	29.71	866.69
05/21/52	30.20	866.20	08/25/52	30.49	865.91	11/23/52	30.47	865.93	03/21/53	29.70	866.70
05/22/52	30.20	866.20	08/26/52	30.56	865.84	11/24/52	30.47	865.93	03/22/53	29.67	866.73
05/23/52	30.22	866.18	08/27/52	30.61	865.79	11/25/52	30.45	865.95	03/23/53	29.67	866.73
05/26/52	30.32	866.08	08/28/52	30.69	865.71	11/26/52	30.44	865.96	03/24/53	29.70	866.70
05/27/52	30.31	866.09	08/29/52	30.74	865.66	11/27/52	30.41	865.99	03/25/53	29.73	866.67
05/28/52	30.33	866.07	08/30/52	30.77	865.63	11/28/52	30.42	865.98	03/26/53	29.75	866.65
05/29/52	30.33	866.07	09/05/52	30.80	865.60	11/29/52	30.42	865.98	03/27/53	29.76	866.64
05/30/52	30.33	866.07	09/06/52	30.83	865.57	12/01/52	30.39	866.01	03/28/53	29.76	866.64
05/31/52	30.33	866.07	09/07/52	30.83	865.57	12/02/52	30.37	866.03	03/29/53	29.75	866.65
06/01/52	30.34	866.06	09/08/52	30.83	865.57	12/03/52	30.36	866.04	03/30/53	29.73	866.67
06/02/52	30.33	866.07	09/09/52	30.82	865.58	12/05/52	30.32	866.08	03/31/53	29.71	866.69
06/03/52	30.34	866.06	09/10/52	30.81	865.59	12/06/52	30.31	866.09	04/01/53	29.71	866.69
06/04/52	30.34	866.06	09/11/52	30.80	865.60	12/15/52	30.28	866.12	04/02/53	29.71	866.69
06/05/52	30.33	866.07	09/12/52	30.80	865.60	12/16/52	30.20	866.20	04/03/53	29.71	866.69
06/06/52	30.31	866.09	09/13/52	30.79	865.61	12/17/52	30.27	866.13	04/04/53	29.72	866.68
06/07/52	30.31	866.09	09/14/52	30.80	865.60	12/20/52	30.25	866.15	04/05/53	29.73	866.67
06/08/52	30.32	866.08	09/15/52	30.80	865.60	12/21/52	30.25	866.15	04/06/53	29.73	866.67
06/09/52	30.35	866.05	09/16/52	30.80	865.60	12/22/52	30.25	866.15	04/07/53	29.71	866.69
06/10/52	30.36	866.04	09/17/52	30.79	865.61	12/23/52	30.21	866.19	04/08/53	29.70	866.70
06/11/52	30.36	866.04	09/18/52	30.78	865.62	12/24/52	30.20	866.20	04/09/53	29.69	866.71
06/12/52	30.36	866.04	09/19/52	30.78	865.62	12/25/52	30.20	866.20	04/10/53	29.67	866.73
06/14/52	30.41	865.99	09/20/52	30.79	865.61	12/26/52	30.19	866.21	04/11/53	29.67	866.73
06/15/52	30.42	865.98	09/21/52	30.79	865.61	12/27/52	30.19	866.21	04/18/53	29.68	866.72
06/16/52	30.41	865.99	09/22/52	30.79	865.61				04/19/53	29.69	866.71
06/17/52	30.42	865.98	09/23/52	30.78	865.62	01/24/53	29.96	866.44	04/20/53	29.69	866.71
06/18/52	30.44	865.96	09/24/52	30.77	865.63	01/25/53	29.96	866.44	04/21/53	29.68	866.72
06/19/52	30.47	865.93	09/25/52	30.76	865.64	01/26/53	29.96	866.44	04/22/53	29.64	866.76
06/20/52	30.47	865.93	09/26/52	30.76	865.64	01/27/53	29.94	866.46	04/23/53	29.62	866.78
06/21/52	30.48	865.92	09/27/52	30.77	865.63	01/28/53	29.94	866.46	04/24/53	29.63	866.77
06/22/52	30.48	865.92	09/28/52	30.75	865.65	01/29/53	29.94	866.46	04/25/53	29.63	866.77
06/23/52	30.48	865.92	09/29/52	30.75	865.65	01/30/53	29.93	866.47	04/27/53	29.61	866.79
06/24/52	30.46	865.94	09/30/52	30.75	865.65	01/31/53	29.92	866.48	04/28/53	29.60	866.80
06/25/52	30.46	865.94	10/01/52	30.73	865.67	02/01/53	29.92	866.48	04/29/53	29.59	866.81
06/26/52	30.48	865.92	10/02/52	30.73	865.67	02/02/53	29.93	866.47	04/30/53	29.58	866.82
06/27/52	30.52	865.88	10/03/52	30.74	865.66	02/03/53	29.92	866.48	05/01/53	29.54	866.86
06/28/52	30.51	865.89	10/04/52	30.72	865.68	02/04/53	29.90	866.50	05/02/53	29.52	866.88
06/29/52	30.51	865.89	10/05/52	30.69	865.71	02/05/53	29.89	866.51	05/03/53	29.55	866.85
07/08/52	30.29	866.11	10/06/52	30.70	865.70	02/06/53	29.87	866.53	05/04/53	29.56	866.84
07/09/52	30.29	866.11	10/07/52	30.70	865.70	02/07/53	29.86	866.54	05/05/53	29.57	866.83
07/10/52	30.28	866.12	10/08/52	30.70	865.70	02/08/53	29.90	866.50	05/06/53	29.56	866.84
07/11/52	30.27	866.13	10/09/52	30.71	865.69	02/09/53	29.93	866.47	05/07/53	29.55	866.85
07/12/52	30.29	866.11	10/10/52	30.72	865.68	02/10/53	29.95	866.45	05/08/53	29.54	866.86
07/13/52	30.29	866.11	10/11/52	30.74	865.66	02/11/53	29.95	866.45	05/09/53	29.52	866.88
07/14/52	30.30	866.10	10/12/52	30.75	865.65	02/12/53	29.91	866.49	05/10/53	29.50	866.90
07/15/52	30.29	866.11	10/13/52	30.76	865.64	02/13/53	29.89	866.51	05/11/53	29.47	866.93
07/16/52	30.28	866.12	10/14/52	30.79	865.61	02/14/53	29.85	866.55	05/12/53	29.48	866.92
07/21/52	30.18	866.22	10/15/52	30.79	865.61	02/15/53	29.83	866.57	05/13/53	29.52	866.88
07/22/52	30.18	866.22	10/16/52	30.81	865.59	02/16/53	29.84	866.56	05/14/53	29.52	866.88

139-048-06CCD **(Continued)** MP Elev (msl,ft)=896.4

Fargo Aquifer SI (ft.)=0-180

Date	Depth to Water (ft)	WL Elev (msl, ft)	Date	Depth to Water (ft)	WL Elev (msl, ft)	Date	Depth to Water (ft)	WL Elev (msl, ft)	Date	Depth to Water (ft)	WL Elev (msl, ft)
05/15/53	29.51	866.89	08/14/53	29.80	866.60	11/10/53	30.03	866.37	02/05/54	29.54	866.86
05/16/53	29.49	866.91	08/18/53	29.86	866.54	11/11/53	30.00	866.40	02/06/54	29.56	866.84
05/17/53	29.49	866.91	08/19/53	29.87	866.53	11/12/53	30.00	866.40	02/07/54	29.56	866.84
05/18/53	29.48	866.92	08/20/53	29.88	866.52	11/13/53	30.00	866.40	02/08/54	29.56	866.84
05/19/53	29.48	866.92	08/21/53	29.88	866.52	11/14/53	29.97	866.43	02/09/54	29.53	866.87
05/20/53	29.46	866.94	08/22/53	29.88	866.52	11/15/53	29.96	866.44	02/10/54	29.54	866.86
05/21/53	29.44	866.96	08/23/53	29.88	866.52	11/16/53	29.95	866.45	02/11/54	29.58	866.82
05/22/53	29.42	866.98	08/24/53	29.88	866.52	11/18/53	29.90	866.50	02/12/54	29.58	866.82
05/23/53	29.44	866.96	08/25/53	29.87	866.53	11/19/53	29.92	866.48	02/13/54	29.57	866.83
05/24/53	29.44	866.96	08/26/53	29.86	866.54	11/20/53	29.93	866.47	02/14/54	29.53	866.87
05/25/53	29.44	866.96	08/27/53	29.86	866.54	11/21/53	29.92	866.48	02/15/54	29.53	866.87
05/26/53	29.47	866.93	08/28/53	29.86	866.54	11/22/53	29.89	866.51	02/16/54	29.54	866.86
05/27/53	29.51	866.89	08/29/53	29.85	866.55	11/23/53	29.81	866.59	02/17/54	29.56	866.84
05/28/53	29.51	866.89	08/30/53	29.86	866.54	11/24/53	29.78	866.62	02/18/54	29.56	866.84
05/29/53	29.50	866.90	08/31/53	29.87	866.53	11/25/53	29.78	866.62	02/19/54	29.55	866.85
05/30/53	29.45	866.95	09/01/53	29.88	866.52	11/26/53	29.79	866.61	02/20/54	29.55	866.85
06/02/53	29.46	866.94	09/02/53	29.88	866.52	11/27/53	29.81	866.59	02/21/54	29.56	866.84
06/05/53	29.50	866.90	09/03/53	29.89	866.51	11/28/53	29.82	866.58	02/22/54	29.56	866.84
06/06/53	29.54	866.86	09/04/53	29.90	866.50	11/29/53	29.82	866.58	02/23/54	29.56	866.84
06/07/53	29.56	866.84	09/05/53	29.91	866.49	11/30/53	29.82	866.58	02/24/54	29.56	866.84
06/08/53	29.55	866.85	09/06/53	29.94	866.46	12/01/53	29.82	866.58	02/25/54	29.55	866.85
06/09/53	29.56	866.84	09/07/53	29.94	866.46	12/02/53	29.81	866.59	03/01/54	29.57	866.83
06/10/53	29.59	866.81	09/13/53	30.00	866.40	12/03/53	29.79	866.61	03/02/54	29.61	866.79
06/11/53	29.60	866.80	09/14/53	30.01	866.39	12/04/53	29.79	866.61	03/03/54	29.66	866.74
06/13/53	29.56	866.84	09/15/53	29.99	866.41	12/05/53	29.74	866.66	03/04/54	29.68	866.72
06/14/53	29.56	866.84	09/16/53	29.98	866.42	12/06/53	29.73	866.67	03/05/54	29.68	866.72
06/15/53	29.55	866.85	09/17/53	29.98	866.42	12/08/53	29.72	866.68	03/06/54	29.67	866.73
06/16/53	29.51	866.89	09/18/53	29.96	866.44	12/09/53	29.74	866.66	03/07/54	29.65	866.75
06/17/53	29.49	866.91	09/19/53	29.96	866.44	12/10/53	29.73	866.67	03/08/54	29.65	866.75
06/18/53	29.48	866.92	09/20/53	29.96	866.44	12/11/53	29.71	866.69	03/09/54	29.63	866.77
06/19/53	29.46	866.94	09/21/53	30.00	866.40	12/12/53	29.70	866.70	03/10/54	29.63	866.77
06/20/53	29.44	866.96	09/22/53	30.01	866.39	12/13/53	29.70	866.70	03/11/54	29.62	866.78
06/21/53	29.44	866.96	09/23/53	30.01	866.39	12/14/53	29.70	866.70	03/12/54	29.63	866.77
06/22/53	29.47	866.93	09/24/53	30.00	866.40	12/15/53	29.70	866.70	03/13/54	29.65	866.75
06/23/53	29.46	866.94	09/25/53	30.00	866.40	12/16/53	29.72	866.68	03/14/54	29.67	866.73
06/24/53	29.46	866.94	09/26/53	29.98	866.42	12/17/53	29.74	866.66	03/15/54	29.69	866.71
06/25/53	29.45	866.95	09/27/53	29.97	866.43	12/18/53	29.74	866.66	03/16/54	29.70	866.70
06/26/53	29.52	866.88	09/28/53	29.97	866.43	12/19/53	29.73	866.67	03/17/54	29.70	866.70
06/27/53	29.54	866.86	09/29/53	29.96	866.44	12/20/53	29.69	866.71	03/18/54	29.67	866.73
06/28/53	29.57	866.83	09/30/53	29.99	866.41	12/21/53	29.66	866.74	03/19/54	29.65	866.75
06/29/53	29.57	866.83	10/01/53	29.99	866.41	12/22/53	29.72	866.68	03/20/54	29.67	866.73
07/06/53	29.54	866.86	10/02/53	29.99	866.41	12/23/53	29.73	866.67	03/21/54	29.67	866.73
07/07/53	29.55	866.85	10/03/53	30.00	866.40	12/24/53	29.73	866.67	03/24/54	29.67	866.73
07/08/53	29.57	866.83	10/04/53	30.01	866.39	12/25/53	29.70	866.70	03/25/54	29.66	866.74
07/09/53	29.59	866.81	10/05/53	30.02	866.38	12/26/53	29.68	866.72	04/01/54	29.67	866.73
07/10/53	29.60	866.80	10/06/53	30.02	866.38	12/27/53	29.68	866.72	04/02/54	29.70	866.70
07/11/53	29.60	866.80	10/07/53	30.02	866.38	12/28/53	29.66	866.74	04/03/54	29.71	866.69
07/12/53	29.59	866.81	10/08/53	30.00	866.40	12/29/53	29.62	866.78	04/04/54	29.71	866.69
07/13/53	29.58	866.82	10/09/53	30.00	866.40	12/30/53	29.62	866.78	04/05/54	29.70	866.70
07/14/53	29.60	866.80	10/10/53	30.00	866.40	12/31/53	29.62	866.78	04/06/54	29.57	866.83
07/15/53	29.61	866.79	10/11/53	29.99	866.41				04/07/54	29.67	866.73
07/16/53	29.62	866.78	10/12/53	30.00	866.40	01/01/54	29.60	866.80	04/08/54	29.70	866.70
07/17/53	29.62	866.78	10/13/53	30.00	866.40	01/02/54	29.60	866.80	04/09/54	29.70	866.70
07/18/53	29.63	866.77	10/14/53	30.00	866.40	01/03/54	29.60	866.80	04/10/54	29.69	866.71
07/19/53	29.62	866.78	10/15/53	30.01	866.39	01/04/54	29.58	866.82	04/11/54	29.68	866.72
07/20/53	29.63	866.77	10/16/53	30.01	866.39	01/05/54	29.60	866.80	04/12/54	29.76	866.64
07/21/53	29.63	866.77	10/17/53	30.01	866.39	01/06/54	29.60	866.80	04/13/54	29.75	866.65
07/22/53	29.64	866.76	10/18/53	30.00	866.40	01/07/54	29.60	866.80	04/14/54	29.72	866.68
07/23/53	29.65	866.75	10/19/53	29.99	866.41	01/08/54	29.57	866.83	04/15/54	29.69	866.71
07/24/53	29.65	866.75	10/20/53	30.00	866.40	01/09/54	29.60	866.80	04/16/54	29.70	866.70
07/25/53	29.65	866.75	10/21/53	30.00	866.40	01/10/54	29.60	866.80	04/17/54	29.70	866.70
07/26/53	29.68	866.72	10/22/53	30.00	866.40	01/11/54	29.59	866.81	04/18/54	29.70	866.70
07/27/53	29.69	866.71	10/23/53	30.01	866.39	01/12/54	29.62	866.78	04/19/54	29.72	866.68
07/28/53	29.69	866.71	10/24/53	30.03	866.37	01/13/54	29.62	866.78	04/20/54	29.76	866.64
07/29/53	29.70	866.70	10/25/53	30.02	866.38	01/14/54	29.58	866.82	04/21/54	29.76	866.64
07/30/53	29.72	866.68	10/26/53	30.01	866.39	01/15/54	29.57	866.83	04/22/54	29.76	866.64
07/31/53	29.73	866.67	10/27/53	30.00	866.40	01/16/54	29.58	866.82	04/23/54	29.76	866.64
08/01/53	29.73	866.67	10/28/53	30.00	866.40	01/17/54	29.58	866.82	04/24/54	29.76	866.64
08/02/53	29.71	866.69	10/29/53	30.00	866.40	01/18/54	29.57	866.83	04/25/54	29.77	866.63
08/03/53	29.71	866.69	10/30/53	29.98	866.42	01/19/54	29.56	866.84	05/01/54	29.75	866.65
08/04/53	29.73	866.67	10/31/53	29.98	866.42	01/20/54	29.56	866.84	05/02/54	29.76	866.64
08/05/53	29.74	866.66	11/01/53	29.98	866.42	01/21/54	29.60	866.80	05/03/54	29.76	866.64
08/06/53	29.74	866.66	11/02/53	29.98	866.42	01/22/54	29.61	866.79	05/04/54	29.75	866.65
08/07/53	29.76	866.64	11/03/53	29.98	866.42	01/23/54	29.60	866.80	05/05/54	29.74	866.66
08/08/53	29.78	866.62	11/04/53	30.01	866.39	01/24/54	29.56	866.84	05/06/54	29.73	866.67
08/09/53	29.78	866.62	11/05/53	30.03	866.37	01/25/54	29.55	866.85	05/07/54	29.73	866.67
08/10/53	29.77	866.63	11/06/53	30.04	866.36	02/01/54	29.55	866.85	05/08/54	29.74	866.66
08/11/53	29.77	866.63	11/07/53	30.03	866.37	02/02/54	29.53	866.87	05/09/54	29.75	866.65
08/12/53	29.78	866.62	11/08/53	30.03	866.37	02/03/54	29.52	866.88	05/10/54	29.76	866.64
08/13/53	29.78	866.62	11/09/53	30.04	866.36	02/04/54	29.52	866.88	05/11/54	29.75	866.65

139-048-06CCD **(Continued)** MP Elev (msl,ft)=896.4

Fargo Aquifer SI (ft.)=0-180

Date	Depth to Water (ft)	WL Elev (msl, ft)	Date	Depth to Water (ft)	WL Elev (msl, ft)	Date	Depth to Water (ft)	WL Elev (msl, ft)	Date	Depth to Water (ft)	WL Elev (msl, ft)
05/12/54	29.75	866.65	08/17/54	30.35	866.05	11/22/54	30.48	865.92	03/17/55	30.12	866.28
05/13/54	29.75	866.65	08/18/54	30.34	866.06	11/23/54	30.47	865.93	03/18/55	30.11	866.29
05/14/54	29.74	866.66	08/19/54	30.34	866.06	11/24/54	30.48	865.92	03/19/55	30.08	866.32
05/15/54	29.73	866.67	08/20/54	30.34	866.06	11/25/54	30.49	865.91	03/20/55	30.10	866.30
05/16/54	29.75	866.65	08/21/54	30.35	866.05				03/21/55	30.10	866.30
05/17/54	29.76	866.64	08/22/54	30.35	866.05	01/01/55	30.37	866.03	03/22/55	30.09	866.31
05/18/54	29.77	866.63	08/23/54	30.35	866.05	01/02/55	30.38	866.02	03/23/55	30.06	866.34
05/19/54	29.78	866.62	08/24/54	30.36	866.04	01/03/55	30.41	865.99	03/24/55	30.07	866.33
05/20/54	29.78	866.62	08/25/54	30.37	866.03	01/04/55	30.41	865.99	03/25/55	30.07	866.33
05/21/54	29.76	866.64	09/01/54	30.44	865.96	01/05/55	30.41	865.99	03/26/55	30.09	866.31
05/22/54	29.75	866.65	09/02/54	30.44	865.96	01/06/55	30.41	865.99	03/27/55	30.10	866.30
05/23/54	29.75	866.65	09/03/54	30.45	865.95	01/07/55	30.42	865.98	03/28/55	30.10	866.30
05/24/54	29.76	866.64	09/04/54	30.45	865.95	01/08/55	30.38	866.02	03/29/55	30.08	866.32
05/25/54	29.78	866.62	09/05/54	30.45	865.95	01/09/55	30.38	866.02	03/30/55	30.08	866.32
06/01/54	29.78	866.62	09/06/54	30.45	865.95	01/10/55	30.39	866.01	03/31/55	30.07	866.33
06/02/54	29.77	866.63	09/07/54	30.45	865.95	01/11/55	30.39	866.01	04/01/55	30.08	866.32
06/03/54	29.78	866.62	09/08/54	30.46	865.94	01/12/55	30.38	866.02	04/02/55	30.07	866.33
06/04/54	29.78	866.62	09/09/54	30.46	865.94	01/13/55	30.38	866.02	04/03/55	30.07	866.33
06/05/54	29.78	866.62	09/10/54	30.43	865.97	01/14/55	30.36	866.04	04/04/55	30.06	866.34
06/06/54	29.78	866.62	09/11/54	30.42	865.98	01/15/55	30.33	866.07	04/05/55	30.06	866.34
06/07/54	29.76	866.64	09/12/54	30.42	865.98	01/16/55	30.35	866.05	04/06/55	30.08	866.32
06/08/54	29.70	866.70	09/13/54	30.41	865.99	01/17/55	30.35	866.05	04/07/55	30.10	866.30
06/09/54	29.71	866.69	09/14/54	30.41	865.99	01/18/55	30.36	866.04	04/08/55	30.10	866.30
06/10/54	29.72	866.68	09/15/54	30.41	865.99	01/19/55	30.36	866.04	04/09/55	30.09	866.31
06/11/54	29.72	866.68	09/16/54	30.41	865.99	01/20/55	30.36	866.04	04/10/55	30.09	866.31
06/12/54	29.72	866.68	09/17/54	30.40	866.00	01/21/55	30.33	866.07	04/11/55	30.08	866.32
06/13/54	29.73	866.67	09/18/54	30.39	866.01	01/22/55	30.30	866.10	04/12/55	30.08	866.32
06/14/54	29.72	866.68	09/19/54	30.37	866.03	01/23/55	30.29	866.11	04/13/55	30.09	866.31
06/15/54	29.72	866.68	09/20/54	30.36	866.04	01/24/55	30.29	866.11	04/14/55	30.10	866.30
06/16/54	29.71	866.69	09/21/54	30.39	866.01	01/25/55	30.30	866.10	04/15/55	30.10	866.30
06/17/54	29.74	866.66	09/22/54	30.40	866.00	01/26/55	30.32	866.08	04/16/55	30.12	866.28
06/18/54	29.79	866.61	09/23/54	30.40	866.00	01/27/55	30.32	866.08	04/17/55	30.13	866.27
06/19/54	29.81	866.59	09/24/54	30.40	866.00	01/28/55	30.32	866.08	04/18/55	30.13	866.27
06/20/54	29.82	866.58	09/25/54	30.40	866.00	01/29/55	30.31	866.09	04/19/55	30.12	866.28
06/21/54	29.82	866.58	10/01/54	30.42	865.98	01/30/55	30.31	866.09	04/20/55	30.10	866.30
06/22/54	29.83	866.57	10/02/54	30.42	865.98	01/31/55	30.30	866.10	04/21/55	30.08	866.32
06/23/54	29.84	866.56	10/03/54	30.41	865.99	02/01/55	30.31	866.09	04/22/55	30.11	866.29
06/24/54	29.84	866.56	10/04/54	30.41	865.99	02/02/55	30.32	866.08	04/23/55	30.11	866.29
06/25/54	29.86	866.54	10/05/54	30.45	865.95	02/03/55	30.35	866.05	04/24/55	30.12	866.28
07/01/54	29.97	866.43	10/06/54	30.48	865.92	02/04/55	30.35	866.05	04/25/55	30.13	866.27
07/02/54	29.97	866.43	10/07/54	30.48	865.92	02/05/55	30.33	866.07	04/26/55	30.14	866.26
07/03/54	29.96	866.44	10/08/54	30.47	865.93	02/06/55	30.29	866.11	04/27/55	30.13	866.27
07/04/54	29.97	866.43	10/09/54	30.45	865.95	02/07/55	30.29	866.11	04/28/55	30.13	866.27
07/05/54	29.97	866.43	10/10/54	30.44	865.96	02/08/55	30.26	866.14	04/29/55	30.16	866.24
07/06/54	29.98	866.42	10/11/54	30.42	865.98	02/09/55	30.26	866.14	04/30/55	30.16	866.24
07/07/54	29.98	866.42	10/12/54	30.38	866.02	02/10/55	30.28	866.12	05/01/55	30.16	866.24
07/08/54	30.00	866.40	10/13/54	30.36	866.04	02/11/55	30.30	866.10	05/02/55	30.16	866.24
07/09/54	30.00	866.40	10/14/54	30.40	866.00	02/12/55	30.31	866.09	05/03/55	30.14	866.26
07/10/54	29.99	866.41	10/15/54	30.40	866.00	02/13/55	30.31	866.09	05/04/55	30.15	866.25
07/11/54	30.00	866.40	10/16/54	30.43	865.97	02/14/55	30.29	866.11	05/05/55	30.17	866.23
07/12/54	30.02	866.38	10/17/54	30.44	865.96	02/15/55	30.26	866.14	05/06/55	30.17	866.23
07/13/54	30.03	866.37	10/18/54	30.46	865.94	02/16/55	30.26	866.14	05/07/55	30.18	866.22
07/14/54	30.06	866.34	10/19/54	30.47	865.93	02/17/55	30.26	866.14	05/08/55	30.20	866.20
07/15/54	30.00	866.40	10/20/54	30.47	865.93	02/18/55	30.24	866.16	05/09/55	30.20	866.20
07/16/54	30.09	866.31	10/21/54	30.45	865.95	02/19/55	30.24	866.16	05/10/55	30.21	866.19
07/17/54	30.09	866.31	10/22/54	30.44	865.96	02/20/55	30.24	866.16	05/11/55	30.22	866.18
07/18/54	30.10	866.30	10/23/54	30.44	865.96	02/21/55	30.16	866.24	05/12/55	30.22	866.18
07/19/54	30.10	866.30	10/24/54	30.44	865.96	02/22/55	30.16	866.24	05/13/55	30.23	866.17
07/20/54	30.12	866.28	10/25/54	30.44	865.96	02/23/55	30.18	866.22	05/14/55	30.24	866.16
07/21/54	30.13	866.27	11/01/54	30.42	865.98	02/24/55	30.20	866.20	05/15/55	30.25	866.15
07/22/54	30.14	866.26	11/02/54	30.43	865.97	02/25/55	30.20	866.20	05/16/55	30.26	866.14
07/23/54	30.15	866.25	11/03/54	30.42	865.98	02/26/55	30.17	866.23	05/18/55	30.28	866.12
07/24/54	30.17	866.23	11/04/54	30.43	865.97	02/27/55	30.17	866.23	05/19/55	30.28	866.12
07/25/54	30.20	866.20	11/05/54	30.43	865.97	02/28/55	30.17	866.23	05/20/55	30.29	866.11
08/01/54	30.20	866.20	11/06/54	30.42	865.98	03/01/55	30.13	866.27	05/21/55	30.29	866.11
08/02/54	30.20	866.20	11/07/54	30.43	865.97	03/02/55	30.10	866.30	05/22/55	30.28	866.12
08/03/54	30.21	866.19	11/08/54	30.48	865.92	03/03/55	30.10	866.30	05/23/55	30.29	866.11
08/04/54	30.23	866.17	11/09/54	30.50	865.90	03/04/55	30.11	866.29	05/24/55	30.31	866.09
08/05/54	30.26	866.14	11/10/54	30.50	865.90	03/05/55	30.12	866.28	05/25/55	30.32	866.08
08/06/54	30.28	866.12	11/11/54	30.52	865.88	03/06/55	30.12	866.28	05/26/55	30.32	866.08
08/07/54	30.28	866.12	11/12/54	30.53	865.87	03/07/55	30.12	866.28	05/27/55	30.30	866.10
08/08/54	30.28	866.12	11/13/54	30.51	865.89	03/08/55	30.09	866.31	05/28/55	30.26	866.14
08/09/54	30.29	866.11	11/14/54	30.50	865.90	03/09/55	30.06	866.34	05/29/55	30.28	866.12
08/10/54	30.31	866.09	11/15/54	30.48	865.92	03/10/55	30.05	866.35	05/30/55	30.29	866.11
08/11/54	30.33	866.07	11/16/54	30.46	865.94	03/11/55	30.04	866.36	05/31/55	30.30	866.10
08/12/54	30.33	866.07	11/17/54	30.45	865.95	03/12/55	30.04	866.36	06/01/55	30.30	866.10
08/13/54	30.33	866.07	11/18/54	30.46	865.94	03/13/55	30.05	866.35	06/02/55	30.30	866.10
08/14/54	30.33	866.07	11/19/54	30.47	865.93	03/14/55	30.08	866.32	06/03/55	30.29	866.11
08/15/54	30.33	866.07	11/20/54	30.47	865.93	03/15/55	30.10	866.30	06/04/55	30.29	866.11
08/16/54	30.34	866.06	11/21/54	30.48	865.92	03/16/55	30.12	866.28	06/05/55	30.29	866.11

139-048-06CCD **(Continued)** MP Elev (msl,ft)=896.4

Fargo Aquifer SI (ft.)=0-180

Date	Depth to Water (ft)	WL Elev (msl, ft)	Date	Depth to Water (ft)	WL Elev (msl, ft)	Date	Depth to Water (ft)	WL Elev (msl, ft)	Date	Depth to Water (ft)	WL Elev (msl, ft)
06/06/55	30.29	866.11	09/06/55	31.11	865.29	12/02/55	31.06	865.34	09/20/56	42.55	853.85
06/07/55	30.30	866.10	09/08/55	31.11	865.29	12/03/55	31.05	865.35	09/25/56	42.48	853.92
06/08/55	30.31	866.09	09/09/55	31.11	865.29	12/04/55	31.05	865.35	09/30/56	42.43	853.97
06/09/55	30.31	866.09	09/10/55	31.11	865.29	12/05/55	31.04	865.36	10/05/56	42.35	854.05
06/10/55	30.31	866.09	09/11/55	31.11	865.29	12/06/55	31.03	865.37	10/10/56	42.28	854.12
06/11/55	30.32	866.08	09/12/55	31.12	865.28	12/07/55	30.99	865.41	10/15/56	42.09	854.31
06/12/55	30.32	866.08	09/13/55	31.11	865.29	12/08/55	31.00	865.40	10/20/56	41.99	854.41
06/13/55	30.33	866.07	09/14/55	31.10	865.30	12/09/55	31.02	865.38	10/25/56	41.85	854.55
06/20/55	30.39	866.01	09/15/55	31.10	865.30	12/10/55	31.03	865.37	10/31/56	41.75	854.65
06/21/55	30.40	866.00	09/16/55	31.09	865.31	12/11/55	31.04	865.36	11/05/56	41.75	854.65
06/22/55	30.41	865.99	09/17/55	31.09	865.31	12/12/55	31.03	865.37	11/10/56	41.73	854.67
06/23/55	30.41	865.99	09/18/55	31.11	865.29	12/13/55	30.99	865.41	11/15/56	41.71	854.69
06/24/55	30.41	865.99	09/19/55	31.12	865.28	12/14/55	30.96	865.44	11/20/56	41.73	854.67
06/25/55	30.43	865.97	09/20/55	31.14	865.26	12/15/55	30.96	865.44	11/25/56	41.84	854.56
06/26/55	30.44	865.96	09/21/55	31.15	865.25	12/16/55	30.96	865.44	11/30/56	41.95	854.45
06/27/55	30.44	865.96	09/22/55	31.16	865.24	12/17/55	30.91	865.49	12/05/56	42.19	854.21
06/28/55	30.44	865.96	09/23/55	31.17	865.23	12/18/55	30.93	865.47	12/10/56	42.49	853.91
06/29/55	30.43	865.97	09/24/55	31.18	865.22	12/19/55	30.96	865.44	12/15/56	42.87	853.53
06/30/55	30.43	865.97	09/25/55	31.20	865.20	12/20/55	30.95	865.45	12/20/56	43.19	853.21
07/01/55	30.43	865.97	09/26/55	31.23	865.17	12/21/55	30.95	865.45	12/25/56	43.39	853.01
07/02/55	30.43	865.97	09/27/55	31.21	865.19	12/22/55	30.94	865.46	12/31/56	43.52	852.88
07/03/55	30.45	865.95	09/28/55	31.17	865.23	12/23/55	30.90	865.50			
07/04/55	30.45	865.95	09/29/55	31.15	865.25	12/24/55	30.84	865.56	01/05/57	43.67	852.73
07/06/55	30.51	865.89	09/30/55	31.15	865.25	12/25/55	30.80	865.60	01/10/57	43.85	852.55
07/11/55	30.51	865.89	10/01/55	31.16	865.24	12/26/55	30.84	865.56	01/15/57	44.03	852.37
07/12/55	30.52	865.88	10/02/55	31.18	865.22	12/27/55	30.86	865.54	01/20/57	44.21	852.19
07/13/55	30.52	865.88	10/03/55	31.18	865.22	12/28/55	30.88	865.52	01/25/57	44.40	852.00
07/14/55	30.49	865.91	10/04/55	31.17	865.23	12/29/55	30.86	865.54	01/31/57	44.47	851.93
07/15/55	30.49	865.91	10/05/55	31.15	865.25	12/30/55	30.90	865.50	02/05/57	44.62	851.78
07/16/55	30.51	865.89	10/06/55	31.11	865.29	12/31/55	30.90	865.50	02/10/57	44.79	851.61
07/17/55	30.53	865.87	10/07/55	31.13	865.27				02/15/57	44.92	851.48
07/18/55	30.54	865.86	10/08/55	31.13	865.27	01/05/56	35.82	860.58	02/20/57	45.10	851.30
07/19/55	30.57	865.83	10/09/55	31.13	865.27	01/10/56	35.88	860.52	02/25/57	45.17	851.23
07/20/55	30.58	865.82	10/10/55	31.13	865.27	01/15/56	35.80	860.60	02/28/57	45.22	851.18
07/21/55	30.58	865.82	10/11/55	31.10	865.30	01/20/56	35.79	860.61	03/05/57	45.37	851.03
07/22/55	30.57	865.83	10/18/55	31.13	865.27	01/25/56	35.78	860.62	03/10/57	45.45	850.95
07/23/55	30.60	865.80	10/19/55	31.13	865.27	01/31/56	35.75	860.65	03/15/57	45.66	850.74
07/24/55	30.61	865.79	10/20/55	31.12	865.28	02/05/56	35.72	860.68	03/20/57	45.74	850.66
07/25/55	30.61	865.79	10/21/55	31.13	865.27	02/10/56	35.71	860.69	03/25/57	45.75	850.65
07/26/55	30.61	865.79	10/22/55	31.13	865.27	02/15/56	35.70	860.70	03/31/57	46.89	849.51
07/27/55	30.63	865.77	10/23/55	31.12	865.28	02/20/56	35.68	860.72	04/05/57	46.06	850.34
07/28/55	30.63	865.77	10/24/55	31.12	865.28	02/28/56	35.65	860.75	04/10/57	46.23	850.17
07/29/55	30.63	865.77	10/25/55	31.12	865.28	03/05/56	35.63	860.77	04/15/57	46.42	849.98
07/30/55	30.63	865.77	10/26/55	31.08	865.32	03/10/56	35.68	860.72	04/20/57	46.48	849.92
07/31/55	30.65	865.75	10/27/55	31.07	865.33	03/15/56	35.69	860.71	04/25/57	46.55	849.85
08/01/55	30.70	865.70	10/28/55	31.05	865.35	03/20/56	35.79	860.61	04/30/57	46.78	849.62
08/03/55	30.70	865.70	10/29/55	31.06	865.34	03/25/56	35.86	860.54	05/05/57	46.93	849.47
08/04/55	30.73	865.67	10/30/55	31.06	865.34	03/31/56	35.80	860.60	05/10/57	46.74	849.66
08/05/55	30.76	865.64	10/31/55	31.07	865.33	04/05/56	35.75	860.65	05/15/57	46.87	849.53
08/06/55	30.77	865.63	11/01/55	31.08	865.32	04/10/56	35.80	860.60	05/20/57	47.10	849.30
08/07/55	30.80	865.60	11/02/55	31.10	865.30	04/15/56	35.76	860.64	05/25/57	47.30	849.10
08/08/55	30.80	865.60	11/03/55	31.12	865.28	04/20/56	35.81	860.59	05/31/57	47.59	848.81
08/09/55	30.79	865.61	11/04/55	31.13	865.27	04/25/56	35.82	860.58	06/05/57	47.82	848.58
08/10/55	30.81	865.59	11/05/55	31.12	865.28	04/30/56	35.85	860.55	06/10/57	48.12	848.28
08/11/55	30.82	865.58	11/06/55	31.11	865.29	05/05/56	35.82	860.58	06/15/57	48.41	847.99
08/12/55	30.82	865.58	11/07/55	31.14	865.26	05/10/56	35.81	860.59	06/20/57	48.70	847.70
08/13/55	30.82	865.58	11/08/55	31.14	865.26	05/15/56	35.80	860.60	06/25/57	48.84	847.56
08/14/55	30.83	865.57	11/09/55	31.17	865.23	05/20/56	35.86	860.54	06/30/57	48.93	847.47
08/15/55	30.83	865.57	11/10/55	31.15	865.25	05/25/56	35.87	860.53	07/05/57	48.94	847.46
08/16/55	30.85	865.55	11/11/55	31.10	865.30	05/31/56	35.92	860.48	07/10/57	49.02	847.38
08/17/55	30.85	865.55	11/12/55	31.10	865.30	06/05/56	36.08	860.32	07/15/57	49.07	847.33
08/18/55	30.85	865.55	11/13/55	31.17	865.23	06/10/56	36.44	859.96	07/20/57	49.08	847.32
08/19/55	30.86	865.54	11/14/55	31.18	865.22	06/15/56	36.71	859.69	07/25/57	49.10	847.30
08/20/55	30.86	865.54	11/15/55	31.18	865.22	06/20/56	37.20	859.20	07/31/57	49.05	847.35
08/21/55	30.91	865.49	11/16/55	31.15	865.25	06/25/56	37.89	858.51	08/05/57	49.07	847.33
08/22/55	30.91	865.49	11/17/55	31.15	865.25	07/05/56	39.22	857.18	08/10/57	49.07	847.33
08/23/55	30.93	865.47	11/18/55	31.15	865.25	07/10/56	39.75	856.65	08/15/57	49.04	847.36
08/24/55	30.94	865.46	11/19/55	31.15	865.25	07/15/56	35.24	861.16	08/20/57	49.07	847.33
08/25/55	30.96	865.44	11/20/55	31.15	865.25	07/20/56	40.65	855.75	08/25/57	49.04	847.36
08/26/55	30.97	865.43	11/21/55	31.13	865.27	07/25/56	40.96	855.44	08/31/57	49.01	847.39
08/27/55	30.98	865.42	11/22/55	31.08	865.32	07/31/56	41.31	855.09	09/05/57	48.83	847.57
08/28/55	30.99	865.41	11/23/55	31.08	865.32	08/05/56	41.44	854.96	09/10/57	48.74	847.66
08/29/55	31.00	865.40	11/24/55	31.09	865.31	08/10/56	41.63	854.77	09/15/57	48.65	847.75
08/30/55	31.02	865.38	11/25/55	31.10	865.30	08/15/56	41.78	854.62	09/20/57	48.56	847.84
08/31/55	31.05	865.35	11/26/55	31.10	865.30	08/20/56	41.98	854.42	09/25/57	48.41	847.99
09/01/55	31.07	865.33	11/27/55	31.08	865.32	08/25/56	42.11	854.29	09/30/57	48.30	848.10
09/02/55	31.07	865.33	11/28/55	31.08	865.32	08/31/56	42.24	854.16	10/05/57	48.14	848.26
09/03/55	31.06	865.34	11/29/55	31.10	865.30	09/05/56	42.56	853.84	10/10/57	47.99	848.41
09/04/55	31.08	865.32	11/30/55	31.11	865.29	09/10/56	42.62	853.78	10/15/57	47.85	848.55
09/05/55	31.09	865.31	12/01/55	31.10	865.30	09/15/56	42.62	853.78	10/20/57	47.76	848.64

139-048-06CCD **(Continued)** MP Elev (msl,ft)=896.4

Fargo Aquifer SI (ft.)=0-180

Date	Depth to Water (ft)	WL Elev (msl, ft)
10/25/57	47.64	848.76
10/31/57	47.48	848.92
11/05/57	47.44	848.96
11/10/57	47.33	849.07
11/15/57	47.21	849.19
11/20/57	47.16	849.24
11/25/57	47.16	849.24
11/30/57	47.13	849.27
12/05/57	47.06	849.34
12/10/57	47.03	849.37
12/15/57	47.04	849.36
12/20/57	46.96	849.44
12/25/57	47.04	849.36
12/31/57	47.12	849.28
01/05/58	47.12	849.28
01/10/58	47.04	849.36
01/15/58	47.10	849.30
01/20/58	47.18	849.22
01/25/58	47.20	849.20
01/31/58	47.30	849.10
02/05/58	47.40	849.00
02/10/58	47.55	848.85
02/15/58	47.58	848.82
02/20/58	47.61	848.79
02/25/58	47.62	848.78
02/28/58	47.63	848.77
03/05/58	47.65	848.75
03/10/58	47.58	848.82
03/15/58	47.97	848.43
03/20/58	48.15	848.25
03/25/58	48.35	848.05
03/31/58	48.61	847.79
04/05/58	48.68	847.72
04/10/58	48.93	847.47
04/15/58	49.03	847.37
04/20/58	49.05	847.35
04/25/58	49.30	847.10
04/30/58	49.44	846.96
05/05/58	49.58	846.82
05/10/58	49.58	846.82
05/15/58	49.62	846.78
05/20/58	49.63	846.77
05/25/58	49.64	846.76
05/31/58	49.69	846.71
06/05/58	49.73	846.67
06/10/58	49.70	846.70
06/15/58	49.72	846.68
06/20/58	49.76	846.64
06/25/58	49.78	846.62
06/30/58	49.83	846.57
07/05/58	49.81	846.59
07/10/58	49.85	846.55
07/15/58	49.87	846.53
07/20/58	49.95	846.45
07/25/58	50.02	846.38
07/31/58	50.10	846.30
08/05/58	50.19	846.21
08/10/58	50.22	846.18
08/15/58	50.27	846.13
08/20/58	50.38	846.02
08/25/58	50.44	845.96
08/31/58	50.48	845.92
09/05/58	50.52	845.88
09/10/58	50.54	845.86
09/15/58	50.50	845.90
09/20/58	50.54	845.86
09/25/58	50.52	845.88
09/30/58	50.54	845.86
10/05/58	50.53	845.87
10/10/58	50.47	845.93
10/15/58	50.46	845.94
10/20/58	50.24	846.16
10/25/58	50.15	846.25
10/31/58	49.83	846.57
11/05/58	49.59	846.81
11/10/58	49.38	847.02
11/15/58	49.22	847.18
11/20/58	48.93	847.47
11/25/58	48.76	847.64
11/30/58	48.59	847.81
12/05/58	48.28	848.12
12/10/58	48.24	848.16
12/15/58	48.12	848.28
12/20/58	48.03	848.37
12/25/58	47.99	848.41
12/31/58	48.02	848.38
01/05/59	47.98	848.42
01/10/59	47.97	848.43
01/15/59	47.87	848.53
01/20/59	47.84	848.56
01/25/59	47.85	848.55
01/31/59	47.91	848.49
02/05/59	47.85	848.55
02/10/59	47.91	848.49
02/15/59	47.90	848.50
02/20/59	47.92	848.48
02/25/59	47.92	848.48
02/28/59	47.92	848.48
03/05/59	47.97	848.43
03/10/59	48.03	848.37
03/15/59	48.13	848.27
03/20/59	48.24	848.16
03/25/59	48.33	848.07
03/31/59	48.39	848.01
04/05/59	48.45	847.95
04/10/59	48.57	847.83
04/15/59	48.56	847.84
04/20/59	48.65	847.75
04/25/59	48.67	847.73
04/30/59	48.72	847.68
05/05/59	48.85	847.55
05/10/59	48.86	847.54
05/15/59	49.02	847.38
05/20/59	48.94	847.46
05/25/59	49.02	847.38
05/31/59	49.10	847.30
06/10/59	48.47	847.93
06/15/59	49.57	846.83
06/20/59	49.56	846.84
06/25/59	49.55	846.85
06/30/59	49.52	846.88
07/05/59	49.44	846.96
07/10/59	49.36	847.04
07/15/59	49.31	847.09
07/20/59	49.26	847.14
07/25/59	49.24	847.16
08/05/59	49.18	847.22
08/10/59	49.24	847.16
08/15/59	49.21	847.19
08/31/59	49.81	846.59
09/10/59	49.74	846.66
09/15/59	49.76	846.64
09/20/59	49.55	846.85
09/30/59	49.79	846.61
10/05/59	49.57	846.83
10/15/59	49.60	846.80
10/20/59	49.54	846.86
10/25/59	49.50	846.90
10/31/59	49.60	846.80
11/05/59	49.71	846.69
11/10/59	49.64	846.76
11/15/59	49.59	846.81
11/20/59	49.49	846.91
11/25/59	49.44	846.96
11/30/59	49.39	847.01
12/05/59	49.39	847.01
12/10/59	49.40	847.00
12/15/59	49.41	846.99
12/20/59	49.48	846.92
12/25/59	49.55	846.85
12/31/59	49.62	846.78
01/05/60	49.38	847.02
01/12/60	49.37	847.03
01/19/60	49.64	846.76
01/25/60	49.44	846.96
02/03/60	49.64	846.76
02/09/60	49.52	846.88
02/16/60	49.48	846.92
02/24/60	49.58	846.82
03/01/60	49.60	846.80
03/08/60	49.57	846.83
03/15/60	49.58	846.82
03/22/60	49.55	846.85
03/29/60	49.54	846.86
04/05/60	49.58	846.82
04/11/60	49.56	846.84
04/19/60	49.59	846.81
04/27/60	49.80	846.60
05/04/60	49.61	846.79
05/11/60	49.71	846.69
05/19/60	49.64	846.76
05/25/60	49.68	846.72
06/02/60	49.66	846.74
06/11/60	49.75	846.65
06/18/60	49.83	846.57
06/25/60	49.76	846.64
07/01/60	49.37	847.03
07/07/60	82.40	814.00
07/14/60	50.91	845.49
07/21/60	75.15	821.25
07/28/60	76.17	820.23
08/04/60	74.88	821.52
08/12/60	83.98	812.42
08/19/60	50.92	845.48
08/27/60	50.77	845.63
09/02/60	53.86	842.54
09/09/60	50.59	845.81
09/16/60	50.40	846.00
09/25/60	50.25	846.15
10/03/60	50.10	846.30
10/10/60	49.98	846.42
10/17/60	49.91	846.49
10/24/60	49.79	846.61
10/31/60	49.64	846.76
11/07/60	49.56	846.84
11/15/60	49.40	847.00
11/21/60	49.34	847.06
12/02/60	49.21	847.19
12/08/60	49.29	847.11
12/13/60	49.18	847.22
12/20/60	49.30	847.10
12/27/60	49.29	847.11
01/03/61	49.26	847.14
01/10/61	49.35	847.05
01/19/61	49.47	846.93
01/25/61	49.52	846.88
02/02/61	49.58	846.82
02/07/61	49.62	846.78
02/10/61	49.56	846.84
02/17/61	49.61	846.79
02/24/61	49.70	846.70
03/03/61	49.81	846.59
03/13/61	49.83	846.57
03/21/61	49.87	846.53
03/24/61	49.94	846.46
04/03/61	50.00	846.40
04/11/61	49.98	846.42
04/17/61	49.91	846.49
04/25/61	49.87	846.53
05/02/61	49.94	846.46
05/09/61	51.85	844.55
05/22/61	49.85	846.55
05/29/61	49.91	846.49
06/03/61	49.96	846.44
06/09/61	49.98	846.42
06/16/61	49.99	846.41
06/23/61	49.97	846.43
06/30/61	74.89	821.51
07/07/61	50.40	846.00
07/14/61	50.26	846.14
07/21/61	52.21	844.19
07/27/61	50.30	846.10
08/02/61	50.36	846.04
08/08/61	50.40	846.00
08/14/61	50.45	845.95
08/21/61	50.61	845.79
08/28/61	50.84	845.56
09/05/61	50.71	845.69
09/11/61	50.76	845.64
09/19/61	50.15	846.25
09/26/61	50.08	846.32
10/03/61	49.89	846.51
10/10/61	49.81	846.59
10/17/61	49.68	846.72
10/24/61	49.80	846.60
10/31/61	49.49	846.91
11/08/61	49.50	846.90
11/14/61	49.40	847.00
11/21/61	49.33	847.07
11/28/61	49.23	847.17
12/05/61	49.33	847.07
12/13/61	49.23	847.17
12/20/61	49.22	847.18
12/27/61	49.25	847.15
01/03/62	44.31	852.09
01/11/62	39.27	857.13
01/20/62	44.06	852.34
01/26/62	43.98	852.42
02/02/62	43.92	852.48
02/09/62	44.00	852.40
02/16/62	43.90	852.50
02/23/62	43.90	852.50
03/02/62	43.89	852.51
03/09/62	43.86	852.54
03/16/62	43.90	852.50
03/23/62	43.96	852.44
03/30/62	44.02	852.38
04/06/62	44.11	852.29
04/13/62	44.10	852.30
04/19/62	44.10	852.30
04/30/62	44.00	852.40
05/07/62	43.82	852.58
05/14/62	43.73	852.67
05/21/62	43.65	852.75
05/25/62	43.58	852.82
06/01/62	43.69	852.71
06/08/62	43.74	852.66
06/15/62	43.71	852.69
06/20/62	43.80	852.60
06/29/62	43.72	852.68
07/06/62	43.87	852.53
07/20/62	43.83	852.57
07/27/62	43.85	852.55
08/03/62	43.84	852.56
08/10/62	44.02	852.38
08/17/62	43.99	852.41
08/24/62	43.92	852.48
08/31/62	43.92	852.48
09/07/62	43.94	852.46
09/14/62	43.90	852.50
09/21/62	43.90	852.50
09/28/62	43.88	852.52
10/05/62	43.87	852.53
10/12/62	43.87	852.53
10/19/62	43.84	852.56
10/26/62	43.78	852.62
11/02/62	43.81	852.59
11/09/62	43.72	852.68
11/16/62	43.75	852.65
11/23/62	43.79	852.61
11/30/62	43.83	852.57
12/07/62	43.81	852.59
12/14/62	43.81	852.59
12/26/62	43.79	852.61
01/11/63	43.88	852.52
01/18/63	43.90	852.50
01/25/63	43.92	852.48
02/01/63	43.93	852.47
02/08/63	43.97	852.43
02/15/63	43.96	852.44
02/21/63	44.98	851.42
03/01/63	44.03	852.37
03/08/63	44.07	852.33
03/15/63	44.05	852.35

139-048-06CCD **(Continued)** MP Elev (msl,ft)=896.4

Fargo Aquifer SI (ft.)=0-180

Date	Depth to Water (ft)	WL Elev (msl, ft)
03/25/63	44.18	852.22
03/29/63	44.21	852.19
04/08/63	44.30	852.10
04/15/63	44.19	852.21
04/22/63	44.51	851.89
04/29/63	44.58	851.82
05/06/63	44.58	851.82
05/13/63	44.68	851.72
05/20/63	44.76	851.64
05/27/63	44.82	851.58
06/03/63	44.81	851.59
06/10/63	69.32	827.08
06/17/63	45.55	850.85
06/28/63	45.56	850.84
07/12/63	45.50	850.90
07/19/63	72.79	823.61
07/26/63	72.41	823.99
08/02/63	47.87	848.53
08/12/63	47.12	849.28
08/19/63	46.57	849.83
08/26/63	46.20	850.20
09/04/63	45.56	850.84
09/16/63	45.58	850.82
09/23/63	45.51	850.89
10/07/63	45.31	851.09
10/14/63	45.22	851.18
10/21/63	45.21	851.19
10/28/63	45.18	851.22
11/04/63	45.09	851.31
11/15/63	44.92	851.48
11/26/63	44.79	851.61
12/03/63	44.76	851.64
12/10/63	44.79	851.61
12/17/63	44.72	851.68
12/24/63	44.69	851.71
01/03/64	44.71	851.69
01/13/64	44.68	851.72
01/20/64	44.54	851.86
01/27/64	44.60	851.80
02/03/64	44.64	851.76
02/10/64	44.69	851.71
02/16/64	44.51	851.89
02/24/64	44.60	851.80
03/02/64	44.63	851.77
03/13/64	44.68	851.72
03/20/64	44.68	851.72
03/27/64	44.92	851.48
04/03/64	45.58	850.82
04/10/64	45.65	850.75
04/25/64	45.73	850.67
05/01/64	45.87	850.53
05/11/64	45.99	850.41
05/18/64	46.06	850.34
05/25/64	46.13	850.27
05/30/64	46.08	850.32
06/05/64	45.40	851.00
06/12/64	46.07	850.33
06/19/64	45.41	850.99
07/03/64	71.08	825.32
07/10/64	74.16	822.24
07/17/64	71.70	824.70
07/27/64	65.81	830.59
08/03/64	46.15	850.25
08/10/64	46.40	850.00
08/19/64	46.89	849.51
08/28/64	46.83	849.57
09/07/64	46.77	849.63
09/14/64	46.16	850.24
09/21/64	46.46	849.94
09/28/64	46.39	850.01
10/05/64	46.40	850.00
10/12/64	46.06	850.34
10/19/64	46.03	850.37
10/26/64	46.04	850.36
11/02/64	46.03	850.37
11/16/64	46.02	850.38
11/23/64	45.94	850.46
11/30/64	45.91	850.49
12/07/64	45.89	850.51
12/14/64	45.79	850.61
12/21/64	45.75	850.65
12/28/64	45.77	850.63
01/04/65	45.80	850.60
01/11/65	45.78	850.62
01/18/65	45.74	850.66
01/25/65	45.73	850.67
02/01/65	45.69	850.71
02/08/65	45.74	850.66
02/15/65	45.78	850.62
02/22/65	45.84	850.56
03/01/65	45.96	850.44
03/08/65	46.01	850.39
03/15/65	46.06	850.34
03/26/65	46.13	850.27
04/07/65	46.08	850.32
04/12/65	46.12	850.28
04/19/65	46.21	850.19
04/26/65	46.27	850.13
05/03/65	46.31	850.09
05/10/65	46.32	850.08
05/17/65	46.35	850.05
05/24/65	46.40	850.00
06/02/65	46.43	849.97
06/11/65	46.41	849.99
06/18/65	46.53	849.87
06/25/65	46.57	849.83
07/02/65	46.62	849.78
07/09/65	46.67	849.73
07/16/65	46.69	849.71
07/28/65	46.61	849.79
08/06/65	46.73	849.67
08/13/65	46.81	849.59
08/20/65	46.78	849.62
08/27/65	46.72	849.68
09/03/65	46.68	849.72
09/13/65	46.61	849.79
09/20/65	46.60	849.80
09/27/65	46.52	849.88
10/04/65	46.54	849.86
10/11/65	46.56	849.84
10/18/65	46.53	849.87
10/25/65	46.47	849.93
11/01/65	46.39	850.01
11/08/65	46.27	850.13
11/15/65	46.15	850.25
11/22/65	46.00	850.40
12/06/65	45.94	850.46
12/13/65	45.90	850.50
12/20/65	45.89	850.51
12/30/65	45.88	850.52
01/10/66	45.89	850.51
01/17/66	45.91	850.49
01/24/66	45.92	850.48
01/31/66	45.94	850.46
02/07/66	45.94	850.46
02/14/66	45.95	850.45
02/21/66	45.97	850.43
02/28/66	45.98	850.42
03/14/66	45.83	850.57
03/21/66	45.30	851.10
03/28/66	45.38	851.02
04/05/66	45.51	850.89
04/12/66	45.53	850.87
04/19/66	45.49	850.91
04/25/66	45.50	850.90
05/02/66	45.50	850.90
07/11/67	51.03	845.37
09/16/69	52.72	843.68
01/07/70	51.70	844.70
12/01/70	53.21	843.19
11/30/71	54.42	841.98
08/27/82	50.07	846.33
11/17/82	52.11	844.29
06/23/83	50.25	846.15
07/28/83	50.37	846.03
08/18/83	50.51	845.89
09/14/83	50.71	845.69
10/12/83	50.59	845.81
11/08/83	50.43	845.97
12/14/83	50.20	846.20
04/12/84	50.07	846.33
05/16/84	50.22	846.18
06/22/84	50.11	846.29
07/12/84	50.27	846.13
09/11/84	50.86	845.54
10/10/84	50.86	845.54
10/31/84	50.47	845.93
12/05/84	51.38	845.02
04/09/85	51.07	845.33
05/03/85	51.40	845.00
06/09/85	50.75	845.65
07/08/85	51.05	845.35
08/14/85	51.19	845.21
09/23/85	51.26	845.14
10/25/85	51.34	845.06
12/06/85	51.08	845.32
05/09/86	51.50	844.90
06/06/86	51.25	845.15
07/03/86	51.25	845.15
07/15/86	51.21	845.19
08/01/86	51.51	844.89
08/29/86	51.70	844.70
10/09/86	51.49	844.91
10/31/86	51.55	844.85
12/05/86	51.43	844.97
12/10/86	51.44	844.96
04/24/87	51.08	845.32
05/29/87	55.82	840.58
06/26/87	51.50	844.90
07/16/87	51.64	844.76
07/31/87	51.82	844.58
08/28/87	51.99	844.41
09/25/87	52.36	844.04
10/30/87	52.22	844.18
11/30/87	52.26	844.14
04/01/88	51.69	844.71
05/27/88	52.23	844.17
06/24/88	52.36	844.04
07/22/88	52.69	843.71
08/22/88	52.91	843.49
09/16/88	53.10	843.30
10/14/88	53.10	843.30
12/09/88	53.02	843.38
04/21/89	52.80	843.60
05/12/89	53.02	843.38
06/05/89	53.10	843.30
07/07/89	53.29	843.11
08/01/89	53.33	843.07
09/29/89	53.56	842.84
11/10/89	53.69	842.71
01/04/90	53.61	842.79
05/04/90	52.52	843.88
05/25/90	53.06	843.34
06/29/90	53.13	843.27
08/03/90	53.29	843.11
09/28/90	53.42	842.98
10/09/90	53.47	842.93
10/26/90	53.37	843.03
11/29/90	53.22	843.18
03/29/91	52.87	843.53
05/10/91	52.79	843.61
07/12/91	52.91	843.49
08/09/91	52.90	843.50
04/17/92	52.50	843.90
05/20/92	52.62	843.78
07/24/92	52.65	843.75
08/27/92	52.77	843.63
09/24/92	52.59	843.81
11/11/92	52.54	843.86
12/14/92	52.42	843.98
05/01/93	52.09	844.31
06/04/93	52.01	844.39
08/06/93	51.79	844.61
08/30/93	52.43	843.97
09/27/93	52.73	843.67
10/18/93	52.80	843.60
11/12/93	52.82	843.58
04/18/94	51.79	844.61
05/16/94	51.71	844.69
06/13/94	51.72	844.68

139-048-06CDD MP Elev (msl,ft)=897.97

Fargo Aquifer SI (ft.)=0-0

Date	Depth to Water (ft)	WL Elev (msl, ft)
07/05/40	21.27	876.70
07/08/40	21.27	876.70
07/09/40	21.26	876.71
07/11/40	21.28	876.69
07/12/40	21.28	876.69
07/13/40	21.30	876.67
07/15/40	21.30	876.67
07/18/40	21.33	876.64
07/20/40	21.40	876.57
07/22/40	21.45	876.52
07/24/40	21.55	876.42
07/26/40	21.65	876.32
07/29/40	21.67	876.30
07/31/40	21.79	876.18
08/03/40	21.62	876.35
08/10/40	22.19	875.78
08/17/40	23.16	874.81
08/24/40	23.64	874.33
08/31/40	24.18	873.79
09/07/40	24.71	873.26
09/14/40	25.15	872.82
09/18/40	25.39	872.58
09/19/40	25.40	872.57
09/20/40	25.46	872.51
09/21/40	25.52	872.45
09/28/40	25.63	872.34
09/29/40	25.63	872.34
09/30/40	25.64	872.33
10/01/40	25.64	872.33
10/02/40	25.64	872.33
10/03/40	25.63	872.34
10/04/40	25.57	872.40
10/05/40	25.56	872.41
10/06/40	25.56	872.41
10/07/40	25.55	872.42
10/08/40	25.53	872.44
10/09/40	25.51	872.46
10/10/40	25.48	872.49
10/11/40	25.46	872.51
10/12/40	25.44	872.53
10/13/40	25.40	872.57
10/14/40	25.37	872.60
10/15/40	25.34	872.63
10/16/40	25.31	872.66
10/17/40	25.28	872.69
10/18/40	25.25	872.72
10/19/40	25.22	872.75
10/20/40	25.20	872.77
10/21/40	25.16	872.81
10/22/40	25.10	872.87
10/23/40	25.06	872.91
10/24/40	25.02	872.95
10/25/40	24.98	872.99
10/26/40	24.95	873.02
10/27/40	24.89	873.08
10/28/40	24.85	873.12
10/29/40	24.81	873.16
10/30/40	24.77	873.20
10/31/40	24.73	873.24
11/01/40	24.70	873.27
11/02/40	24.65	873.32
11/03/40	24.62	873.35
11/04/40	24.59	873.38
11/05/40	24.54	873.43
11/09/40	24.36	873.61
11/10/40	24.35	873.62
11/16/40	24.15	873.82
11/17/40	24.14	873.83
11/18/40	24.11	873.86
11/19/40	24.07	873.90
11/20/40	24.04	873.93
11/21/40	24.01	873.96
11/22/40	23.98	873.99
11/23/40	23.95	874.02
11/24/40	23.92	874.05
11/25/40	23.89	874.08
11/26/40	23.86	874.11
11/27/40	23.84	874.13
11/28/40	23.81	874.16
11/29/40	23.78	874.19
11/30/40	23.75	874.22
12/01/40	23.73	874.24
12/02/40	23.71	874.26
12/03/40	23.69	874.28
12/04/40	23.66	874.31
12/05/40	23.63	874.34
12/06/40	23.61	874.36
12/07/40	23.57	874.40
12/08/40	23.55	874.42
12/09/40	23.52	874.45
12/10/40	23.49	874.48
12/11/40	23.48	874.49
12/12/40	23.46	874.51
12/13/40	23.44	874.53
12/14/40	23.43	874.54
12/15/40	23.40	874.57
12/16/40	23.38	874.59
12/17/40	23.36	874.61
12/18/40	23.34	874.63
12/19/40	23.32	874.65
12/20/40	23.29	874.68
12/21/40	23.28	874.69
12/22/40	23.24	874.73
12/23/40	23.23	874.74
12/24/40	23.21	874.76
12/25/40	23.18	874.79
12/26/40	23.17	874.80
12/27/40	23.15	874.82
12/28/40	23.13	874.84
01/04/41	22.99	874.98
01/06/41	22.97	875.00
01/07/41	22.96	875.01
01/08/41	22.95	875.02
01/09/41	22.94	875.03
01/10/41	22.93	875.04
01/11/41	22.91	875.06
01/12/41	22.89	875.08
01/13/41	22.88	875.09
01/14/41	22.87	875.10
01/15/41	22.85	875.12
01/16/41	22.83	875.14
01/17/41	22.82	875.15
01/18/41	22.80	875.17
01/19/41	22.80	875.17
01/20/41	22.79	875.18
01/21/41	22.77	875.20
01/22/41	22.76	875.21
01/23/41	22.74	875.23
01/24/41	22.73	875.24
01/25/41	22.72	875.25
01/26/41	22.71	875.26
01/27/41	22.70	875.27
01/28/41	22.69	875.28
01/29/41	22.68	875.29
01/30/41	22.66	875.31
01/31/41	22.65	875.32
02/01/41	22.64	875.33
02/02/41	22.61	875.36
02/03/41	22.61	875.36
02/04/41	22.60	875.37
02/05/41	22.60	875.37
02/06/41	22.59	875.38
02/07/41	22.59	875.38
02/08/41	22.58	875.39
02/09/41	22.57	875.40
02/10/41	22.56	875.41
02/11/41	22.56	875.41
02/12/41	22.55	875.42
02/13/41	22.53	875.44
02/14/41	22.52	875.45
02/15/41	22.52	875.45
02/16/41	22.52	875.45
02/17/41	22.51	875.46
02/18/41	22.50	875.47
02/19/41	22.50	875.47
02/20/41	22.49	875.48
02/21/41	22.48	875.49
02/22/41	22.47	875.50
02/23/41	22.46	875.51
02/24/41	22.45	875.52
02/25/41	22.44	875.53
02/26/41	22.43	875.54
02/27/41	22.42	875.55
02/28/41	22.42	875.55
03/01/41	22.41	875.56
03/02/41	22.39	875.58
03/03/41	22.38	875.59
03/04/41	22.37	875.60
03/05/41	22.36	875.61
03/06/41	22.35	875.62
03/07/41	22.35	875.62
03/08/41	22.34	875.63
03/09/41	22.33	875.64
03/10/41	22.33	875.64
03/11/41	22.32	875.65
03/12/41	22.32	875.65
03/13/41	22.31	875.66
03/14/41	22.31	875.66
03/15/41	22.30	875.67
03/16/41	22.29	875.68
03/17/41	22.29	875.68
03/18/41	22.29	875.68
03/19/41	22.28	875.69
03/20/41	22.28	875.69
03/21/41	22.28	875.69
03/22/41	22.07	875.90
03/23/41	22.27	875.70
03/24/41	22.27	875.70
03/25/41	22.26	875.71
03/26/41	22.26	875.71
03/27/41	22.26	875.71
03/28/41	22.25	875.72
03/29/41	22.25	875.72
03/30/41	22.25	875.72
03/31/41	22.24	875.73
04/01/41	22.24	875.73
04/02/41	22.23	875.74
04/03/41	22.22	875.75
04/04/41	22.22	875.75
04/05/41	22.21	875.76
04/06/41	22.20	875.77
04/07/41	22.20	875.77
04/08/41	22.19	875.78
04/09/41	22.18	875.79
04/10/41	22.17	875.80
04/11/41	22.16	875.81
04/12/41	22.15	875.82
04/13/41	22.15	875.82
04/14/41	22.14	875.83
04/15/41	22.11	875.86
04/16/41	22.10	875.87
04/17/41	22.10	875.87
04/18/41	22.09	875.88
04/19/41	22.08	875.89
04/20/41	22.07	875.90
04/21/41	22.06	875.91
04/22/41	22.06	875.91
04/23/41	22.06	875.91
04/24/41	22.06	875.91
04/25/41	22.05	875.92
04/26/41	22.05	875.92
04/27/41	22.05	875.92
04/28/41	22.04	875.93
04/29/41	22.04	875.93
04/30/41	22.03	875.94
05/01/41	22.03	875.94
05/02/41	22.02	875.95
05/03/41	22.02	875.95
05/04/41	22.03	875.94
05/05/41	21.95	876.02
05/06/41	21.53	876.44
05/07/41	21.00	876.97
05/08/41	20.61	877.36
05/09/41	20.66	877.31
05/10/41	20.73	877.24
05/11/41	20.81	877.16
05/12/41	20.88	877.09
05/13/41	20.94	877.03
05/14/41	20.94	877.03
05/15/41	20.68	877.29
05/16/41	20.39	877.58
05/17/41	20.47	877.50
05/18/41	20.09	877.88
05/19/41	19.43	878.54
05/20/41	19.04	878.93
05/21/41	19.06	878.91
05/22/41	19.15	878.82
05/23/41	19.31	878.66
05/24/41	19.48	878.49
05/25/41	19.50	878.47
05/26/41	19.80	878.17
05/27/41	18.66	879.31
05/28/41	18.50	879.47
05/29/41	17.56	880.41
05/30/41	17.20	880.77
05/31/41	16.67	881.30
06/01/41	16.16	881.81
06/02/41	16.33	881.64
06/03/41	16.57	881.40
06/04/41	16.81	881.16
06/05/41	17.00	880.97
06/06/41	16.13	881.84
06/28/41	13.45	884.52
06/29/41	14.64	883.33
06/30/41	15.56	882.41
07/01/41	16.40	881.57
07/02/41	17.23	880.74
07/03/41	17.69	880.28
07/04/41	18.48	879.49
07/05/41	19.25	878.72
07/06/41	19.94	878.03
07/07/41	20.60	877.37
07/08/41	21.21	876.76
07/09/41	21.77	876.20
07/10/41	22.30	875.67
07/11/41	22.78	875.19
07/12/41	23.22	874.75
07/14/41	24.06	873.91
07/15/41	24.43	873.54
07/16/41	24.78	873.19
07/17/41	25.10	872.87
07/18/41	25.41	872.56
07/19/41	25.70	872.27
07/20/41	25.97	872.00
07/21/41	26.23	871.74
07/22/41	26.47	871.50
07/23/41	26.71	871.26
07/24/41	26.93	871.04
07/25/41	27.15	870.82
07/26/41	27.34	870.63
07/27/41	27.53	870.44
07/28/41	27.71	870.26
07/29/41	27.89	870.08
07/30/41	28.06	869.91
07/31/41	28.22	869.75
08/01/41	28.37	869.60
08/02/41	28.53	869.44
08/03/41	28.67	869.30
08/04/41	28.81	869.16
08/05/41	28.93	869.04
08/06/41	29.06	868.91
08/07/41	29.17	868.80
08/08/41	29.29	868.68
08/09/41	29.41	868.56
08/10/41	29.52	868.45
08/11/41	29.62	868.35
08/12/41	29.72	868.25
08/13/41	29.82	868.15
08/14/41	29.91	868.06
08/15/41	30.00	867.97
08/16/41	30.09	867.88
08/17/41	30.19	867.78
08/18/41	30.28	867.69
08/19/41	30.37	867.60
08/20/41	30.46	867.51
08/21/41	30.55	867.42
08/22/41	30.64	867.33
08/23/41	30.73	867.24
08/24/41	30.81	867.16

139-048-06CDD **(Continued)** MP Elev (msl,ft)=897.97

Fargo Aquifer SI (ft.)=0-0

Date	Depth to Water (ft)	WL Elev (msl, ft)	Date	Depth to Water (ft)	WL Elev (msl, ft)	Date	Depth to Water (ft)	WL Elev (msl, ft)	Date	Depth to Water (ft)	WL Elev (msl, ft)
08/25/41	30.90	867.07	11/13/41	30.41	867.56	02/01/42	26.09	871.88	04/22/42	24.56	873.41
08/26/41	31.00	866.97	11/14/41	30.31	867.66	02/02/42	26.07	871.90	04/23/42	24.55	873.42
08/27/41	31.09	866.88	11/15/41	30.21	867.76	02/03/42	26.04	871.93	04/24/42	24.53	873.44
08/28/41	31.18	866.79	11/16/41	30.12	867.85	02/04/42	26.02	871.95	04/25/42	24.52	873.45
08/29/41	31.27	866.70	11/17/41	30.03	867.94	02/05/42	25.99	871.98	04/26/42	24.50	873.47
08/30/41	31.35	866.62	11/18/41	29.93	868.04	02/06/42	25.96	872.01	04/27/42	24.49	873.48
08/31/41	31.43	866.54	11/19/41	29.84	868.13	02/07/42	25.93	872.04	04/28/42	24.48	873.49
09/01/41	31.52	866.45	11/21/41	29.66	868.31	02/08/42	25.91	872.06	04/29/42	24.46	873.51
09/02/41	31.60	866.37	11/22/41	29.58	868.39	02/09/42	25.88	872.09	04/30/42	24.44	873.53
09/03/41	31.68	866.29	11/23/41	29.50	868.47	02/10/42	25.86	872.11	05/01/42	24.42	873.55
09/04/41	31.76	866.21	11/24/41	29.42	868.55	02/11/42	25.84	872.13	05/02/42	24.39	873.58
09/05/41	31.84	866.13	11/25/41	29.35	868.62	02/12/42	25.82	872.15	05/03/42	24.36	873.61
09/06/41	31.92	866.05	11/26/41	29.27	868.70	02/13/42	25.79	872.18	05/04/42	24.35	873.62
09/07/41	32.00	865.97	11/27/41	29.19	868.78	02/14/42	25.77	872.20	05/05/42	24.34	873.63
09/08/41	32.08	865.89	11/28/41	29.11	868.86	02/15/42	25.74	872.23	05/06/42	24.32	873.65
09/09/41	32.15	865.82	11/29/41	29.04	868.93	02/16/42	25.72	872.25	05/07/42	24.31	873.66
09/10/41	32.23	865.74	11/30/41	28.96	869.01	02/17/42	25.69	872.28	05/08/42	24.30	873.67
09/11/41	32.32	865.65	12/01/41	28.90	869.07	02/18/42	25.66	872.31	05/09/42	24.28	873.69
09/12/41	32.36	865.61	12/02/41	28.83	869.14	02/19/42	25.65	872.32	05/10/42	24.26	873.71
09/13/41	32.28	865.69	12/03/41	28.76	869.21	02/20/42	25.63	872.34	05/11/42	24.25	873.72
09/14/41	32.01	865.96	12/04/41	28.68	869.29	02/21/42	25.60	872.37	05/12/42	24.24	873.73
09/15/41	32.12	865.85	12/05/41	28.61	869.36	02/22/42	25.58	872.39	05/13/42	24.22	873.75
09/16/41	32.22	865.75	12/06/41	28.55	869.42	02/23/42	25.57	872.40	05/14/42	24.21	873.76
09/17/41	32.33	865.64	12/07/41	28.47	869.50	02/24/42	25.55	872.42	05/15/42	24.19	873.78
09/18/41	32.43	865.54	12/08/41	28.41	869.56	02/25/42	25.53	872.44	05/16/42	24.18	873.79
09/19/41	32.52	865.45	12/09/41	28.35	869.62	02/26/42	25.51	872.46	05/17/42	24.17	873.80
09/20/41	32.61	865.36	12/10/41	28.29	869.68	02/27/42	25.49	872.48	05/18/42	24.16	873.81
09/21/41	32.70	865.27	12/11/41	28.24	869.73	02/28/42	25.47	872.50	05/19/42	24.15	873.82
09/22/41	32.79	865.18	12/12/41	28.18	869.79	03/01/42	25.44	872.53	05/20/42	24.14	873.83
09/23/41	32.88	865.09	12/13/41	28.12	869.85	03/02/42	25.43	872.54	05/21/42	24.13	873.84
09/24/41	32.95	865.02	12/14/41	28.06	869.91	03/03/42	25.41	872.56	05/22/42	24.12	873.85
09/25/41	33.03	864.94	12/15/41	28.00	869.97	03/04/42	25.39	872.58	05/23/42	24.11	873.86
09/26/41	33.10	864.87	12/16/41	27.95	870.02	03/05/42	25.37	872.60	05/24/42	24.10	873.87
09/27/41	33.07	864.90	12/17/41	27.89	870.08	03/06/42	25.34	872.63	05/25/42	24.09	873.88
09/28/41	33.24	864.73	12/18/41	27.83	870.14	03/07/42	25.31	872.66	05/26/42	24.09	873.88
09/29/41	33.31	864.66	12/19/41	27.78	870.19	03/08/42	25.28	872.69	05/27/42	24.08	873.89
09/30/41	33.37	864.60	12/20/41	27.73	870.24	03/09/42	25.27	872.70	05/28/42	24.06	873.91
10/01/41	33.44	864.53	12/21/41	27.68	870.29	03/10/42	25.25	872.72	05/29/42	24.05	873.92
10/02/41	33.51	864.46	12/22/41	27.62	870.35	03/11/42	25.23	872.74	05/30/42	24.03	873.94
10/03/41	33.56	864.41	12/23/41	27.58	870.39	03/12/42	25.21	872.76	05/31/42	24.02	873.95
10/04/41	33.59	864.38	12/24/41	27.53	870.44	03/13/42	25.19	872.78	06/01/42	24.02	873.95
10/05/41	33.62	864.35	12/25/41	27.48	870.49	03/14/42	25.17	872.80	06/02/42	24.01	873.96
10/06/41	33.63	864.34	12/26/41	27.44	870.53	03/15/42	25.15	872.82	06/03/42	24.01	873.96
10/07/41	33.64	864.33	12/27/41	27.39	870.58	03/16/42	25.14	872.83	06/04/42	24.00	873.97
10/08/41	33.64	864.33	12/28/41	27.35	870.62	03/17/42	25.12	872.85	06/05/42	23.99	873.98
10/09/41	33.63	864.34	12/29/41	27.32	870.65	03/18/42	25.10	872.87	06/06/42	23.98	873.99
10/10/41	33.62	864.35	12/30/41	27.28	870.69	03/19/42	25.08	872.89	06/07/42	23.96	874.01
10/11/41	33.61	864.36	12/31/41	27.24	870.73	03/20/42	25.06	872.91	06/08/42	23.95	874.02
10/12/41	33.58	864.39				03/21/42	25.05	872.92	06/09/42	23.94	874.03
10/13/41	33.52	864.45	01/01/42	27.21	870.76	03/22/42	25.03	872.94	06/10/42	23.93	874.04
10/14/41	33.47	864.50	01/02/42	27.17	870.80	03/23/42	25.02	872.95	06/11/42	23.92	874.05
10/15/41	33.40	864.57	01/03/42	27.12	870.85	03/24/42	25.01	872.96	06/12/42	23.90	874.07
10/16/41	33.33	864.64	01/04/42	27.16	870.81	03/25/42	24.99	872.98	06/13/42	23.89	874.08
10/17/41	33.25	864.72	01/05/42	27.03	870.94	03/26/42	24.97	873.00	06/14/42	23.88	874.09
10/18/41	33.16	864.81	01/06/42	26.99	870.98	03/27/42	24.95	873.02	06/15/42	23.87	874.10
10/19/41	33.07	864.90	01/07/42	26.95	871.02	03/28/42	24.93	873.04	06/16/42	23.87	874.10
10/20/41	32.98	864.99	01/08/42	26.92	871.05	03/29/42	24.90	873.07	06/17/42	23.86	874.11
10/21/41	32.88	865.09	01/09/42	26.88	871.09	03/30/42	24.89	873.08	06/18/42	23.86	874.11
10/22/41	32.78	865.19	01/10/42	26.84	871.13	03/31/42	24.88	873.09	06/19/42	23.85	874.12
10/23/41	32.66	865.31	01/11/42	26.79	871.18	04/01/42	24.86	873.11	06/20/42	23.83	874.14
10/24/41	32.56	865.41	01/12/42	26.75	871.22	04/02/42	24.84	873.13	06/21/42	23.82	874.15
10/25/41	32.46	865.51	01/13/42	26.71	871.26	04/03/42	24.83	873.14	06/22/42	23.81	874.16
10/26/41	32.36	865.61	01/14/42	26.67	871.30	04/04/42	24.81	873.16	06/23/42	23.81	874.16
10/27/41	32.24	865.73	01/15/42	26.64	871.33	04/05/42	24.78	873.19	06/24/42	23.81	874.16
10/28/41	32.13	865.84	01/16/42	26.61	871.36	04/06/42	24.76	873.21	06/25/42	23.81	874.16
10/29/41	32.02	865.95	01/17/42	26.57	871.40	04/07/42	24.74	873.23	06/26/42	23.80	874.17
10/30/41	31.90	866.07	01/18/42	26.53	871.44	04/08/42	24.72	873.25	06/27/42	23.80	874.17
10/31/41	31.79	866.18	01/19/42	26.50	871.47	04/09/42	24.71	873.26	06/28/42	23.79	874.18
11/01/41	31.68	866.29	01/20/42	26.47	871.50	04/10/42	24.70	873.27	06/29/42	23.78	874.19
11/02/41	31.56	866.41	01/21/42	26.43	871.54	04/11/42	24.68	873.29	06/30/42	23.78	874.19
11/03/41	31.45	866.52	01/22/42	26.40	871.57	04/12/42	24.67	873.30	07/01/42	23.77	874.20
11/04/41	31.35	866.62	01/23/42	26.37	871.60	04/13/42	24.65	873.32	07/02/42	23.77	874.20
11/05/41	31.23	866.74	01/24/42	26.33	871.64	04/14/42	24.65	873.32	07/03/42	23.76	874.21
11/06/41	31.12	866.85	01/25/42	26.31	871.66	04/15/42	24.63	873.34	07/04/42	23.75	874.22
11/07/41	31.02	866.95	01/26/42	26.28	871.69	04/16/42	24.61	873.36	07/05/42	23.75	874.22
11/08/41	30.91	867.06	01/27/42	26.25	871.72	04/17/42	24.60	873.37	07/06/42	23.74	874.23
11/09/41	30.81	867.16	01/28/42	26.22	871.75	04/18/42	24.59	873.38	07/07/42	23.73	874.24
11/10/41	30.71	867.26	01/29/42	26.19	871.78	04/19/42	24.58	873.39	07/08/42	23.73	874.24
11/11/41	30.61	867.36	01/30/42	26.16	871.81	04/20/42	24.57	873.40	07/09/42	23.72	874.25
11/12/41	30.51	867.46	01/31/42	26.13	871.84	04/21/42	24.57	873.40	07/10/42	23.71	874.26

139-048-06CDD **(Continued)** MP Elev (msl,ft)=897.97

Fargo Aquifer SI (ft.)=0-0

Date	Depth to Water (ft)	WL Elev (msl, ft)	Date	Depth to Water (ft)	WL Elev (msl, ft)	Date	Depth to Water (ft)	WL Elev (msl, ft)	Date	Depth to Water (ft)	WL Elev (msl, ft)
07/11/42	23.71	874.26	09/29/42	26.33	871.64	12/31/42	24.44	873.53	03/26/43	23.77	874.20
07/12/42	23.70	874.27	09/30/42	26.30	871.67				03/27/43	23.77	874.20
07/13/42	23.70	874.27	10/01/42	26.28	871.69	01/01/43	24.43	873.54	03/28/43	23.77	874.20
07/14/42	23.69	874.28	10/02/42	26.24	871.73	01/02/43	24.42	873.55	03/29/43	23.77	874.20
07/15/42	23.69	874.28	10/03/42	26.21	871.76	01/09/43	24.34	873.63	03/30/43	23.76	874.21
07/16/42	23.69	874.28	10/04/42	26.19	871.78	01/10/43	24.33	873.64	03/31/43	23.76	874.21
07/17/42	23.69	874.28	10/05/42	26.16	871.81	01/11/43	24.32	873.65	04/01/43	23.76	874.21
07/18/42	23.69	874.28	10/06/42	26.13	871.84	01/12/43	24.31	873.66	04/02/43	23.76	874.21
07/19/42	23.69	874.28	10/07/42	26.10	871.87	01/13/43	24.30	873.67	04/03/43	23.75	874.22
07/20/42	23.68	874.29	10/08/42	26.07	871.90	01/14/43	24.29	873.68	04/04/43	23.75	874.22
07/21/42	23.68	874.29	10/09/42	26.04	871.93	01/15/43	24.27	873.70	04/05/43	23.74	874.23
07/22/42	23.68	874.29	10/10/42	26.01	871.96	01/16/43	24.25	873.72	04/06/43	23.73	874.24
07/23/42	23.68	874.29	10/11/42	25.98	871.99	01/17/43	24.24	873.73	04/07/43	23.73	874.24
07/24/42	23.68	874.29	10/12/42	25.95	872.02	01/18/43	24.24	873.73	04/08/43	23.72	874.25
07/25/42	23.68	874.29	10/13/42	25.92	872.05	01/19/43	24.23	873.74	04/09/43	23.71	874.26
07/26/42	23.68	874.29	10/14/42	25.89	872.08	01/20/43	24.23	873.74	04/10/43	23.71	874.26
07/27/42	23.68	874.29	10/15/42	25.86	872.11	01/21/43	24.22	873.75	04/11/43	23.72	874.25
07/28/42	23.70	874.27	10/16/42	25.84	872.13	01/22/43	24.21	873.76	04/12/43	23.74	874.23
07/29/42	23.72	874.25	10/17/42	25.82	872.15	01/23/43	24.20	873.77	04/13/43	23.77	874.20
07/30/42	23.74	874.23	10/18/42	25.79	872.18	01/24/43	24.18	873.79	04/14/43	23.81	874.16
07/31/42	23.76	874.21	10/19/42	25.77	872.20	01/25/43	24.17	873.80	04/15/43	23.84	874.13
08/01/42	23.80	874.17	10/20/42	25.74	872.23	01/26/43	24.16	873.81	04/16/43	23.88	874.09
08/02/42	23.85	874.12	10/21/42	25.71	872.26	01/27/43	24.15	873.82	04/17/43	23.92	874.05
08/03/42	23.89	874.08	10/22/42	25.67	872.30	01/28/43	24.15	873.82	04/18/43	23.96	874.01
08/04/42	23.94	874.03	10/23/42	25.64	872.33	01/29/43	24.14	873.83	04/19/43	24.00	873.97
08/05/42	23.99	873.98	10/24/42	25.61	872.36	01/30/43	24.13	873.84	04/20/43	24.02	873.95
08/06/42	24.05	873.92	10/25/42	25.59	872.38	01/31/43	24.12	873.85	04/21/43	24.05	873.92
08/07/42	24.11	873.86	10/26/42	25.56	872.41	02/01/43	24.11	873.86	04/22/43	24.08	873.89
08/08/42	24.19	873.78	10/27/42	25.54	872.43	02/02/43	24.11	873.86	04/23/43	24.10	873.87
08/09/42	24.21	873.76	10/28/42	25.51	872.46	02/03/43	24.10	873.87	04/24/43	24.12	873.85
08/10/42	24.33	873.64	10/29/42	25.49	872.48	02/04/43	24.09	873.88	04/25/43	24.14	873.83
08/11/42	24.41	873.56	10/30/42	25.46	872.51	02/05/43	24.08	873.89	04/26/43	24.16	873.81
08/12/42	24.49	873.48	10/31/42	25.42	872.55	02/06/43	24.06	873.91	04/27/43	24.17	873.80
08/13/42	24.56	873.41	11/01/42	25.40	872.57	02/07/43	24.05	873.92	04/28/43	24.19	873.78
08/14/42	24.63	873.34	11/02/42	25.37	872.60	02/08/43	24.05	873.92	04/29/43	24.20	873.77
08/15/42	24.70	873.27	11/03/42	25.35	872.62	02/09/43	24.04	873.93	04/30/43	24.22	873.75
08/16/42	24.78	873.19	11/04/42	25.33	872.64	02/10/43	24.03	873.94	05/01/43	24.23	873.74
08/17/42	24.87	873.10	11/05/42	25.31	872.66	02/11/43	24.02	873.95	05/02/43	24.24	873.73
08/18/42	24.95	873.02	11/06/42	25.28	872.69	02/12/43	24.02	873.95	05/03/43	24.24	873.73
08/19/42	25.02	872.95	11/07/42	25.26	872.71	02/13/43	24.01	873.96	05/04/43	24.24	873.73
08/20/42	25.11	872.86	11/08/42	25.25	872.72	02/14/43	24.01	873.96	05/05/43	24.24	873.73
08/21/42	25.19	872.78	11/09/42	25.23	872.74	02/15/43	24.01	873.96	05/06/43	24.25	873.72
08/22/42	25.30	872.67	11/10/42	25.21	872.76	02/16/43	24.01	873.96	05/07/43	24.25	873.72
08/23/42	25.39	872.58	11/11/42	25.18	872.79	02/17/43	24.00	873.97	05/08/43	24.25	873.72
08/24/42	25.47	872.50	11/12/42	25.17	872.80	02/18/43	24.00	873.97	05/09/43	24.25	873.72
08/25/42	25.55	872.42	11/13/42	25.14	872.83	02/19/43	24.00	873.97	05/10/43	24.25	873.72
08/26/42	25.63	872.34	11/14/42	25.12	872.85	02/20/43	23.95	874.02	05/11/43	24.25	873.72
08/27/42	25.72	872.25	11/15/42	25.21	872.76	02/21/43	23.95	874.02	05/12/43	24.25	873.72
08/28/42	25.79	872.18	11/16/42	25.08	872.89	02/22/43	23.94	874.03	05/13/43	24.25	873.72
08/29/42	25.86	872.11	11/17/42	25.06	872.91	02/23/43	23.93	874.04	05/14/43	24.26	873.71
08/30/42	25.93	872.04	11/18/42	25.03	872.94	02/24/43	23.92	874.05	05/15/43	24.26	873.71
08/31/42	26.00	871.97	11/19/42	25.02	872.95	02/25/43	23.92	874.05	05/16/43	24.26	873.71
09/01/42	26.07	871.90	11/20/42	25.00	872.97	02/26/43	23.92	874.05	05/17/43	24.25	873.72
09/02/42	26.14	871.83	11/21/42	24.99	872.98	02/27/43	23.91	874.06	05/18/43	24.25	873.72
09/03/42	26.20	871.77	11/22/42	24.98	872.99	02/28/43	23.91	874.06	05/19/43	24.25	873.72
09/04/42	26.26	871.71	11/23/42	24.96	873.01	03/01/43	23.90	874.07	05/20/43	24.24	873.73
09/05/42	26.31	871.66	11/24/42	24.95	873.02	03/02/43	23.90	874.07	05/21/43	24.24	873.73
09/06/42	26.36	871.61	11/25/42	24.93	873.04	03/03/43	23.90	874.07	05/22/43	24.24	873.73
09/07/42	26.40	871.57	11/26/42	24.91	873.06	03/04/43	23.90	874.07	05/23/43	24.23	873.74
09/08/42	26.43	871.54	11/27/42	24.90	873.07	03/05/43	23.89	874.08	05/24/43	24.22	873.75
09/09/42	26.46	871.51	11/28/42	24.88	873.09	03/06/43	23.88	874.09	05/25/43	24.13	873.84
09/10/42	26.48	871.49	11/29/42	24.86	873.11	03/07/43	23.88	874.09	05/26/43	24.19	873.78
09/11/42	26.49	871.48	11/30/42	24.85	873.12	03/08/43	23.88	874.09	05/27/43	24.17	873.80
09/12/42	26.51	871.46	12/01/42	24.83	873.14	03/09/43	23.88	874.09	05/28/43	24.14	873.83
09/13/42	26.51	871.46	12/02/42	24.82	873.15	03/10/43	23.87	874.10	05/29/43	24.15	873.82
09/14/42	26.51	871.46	12/03/42	24.80	873.17	03/11/43	23.87	874.10	05/30/43	24.14	873.83
09/15/42	26.51	871.46	12/04/42	24.78	873.19	03/12/43	23.86	874.11	05/31/43	24.14	873.83
09/16/42	26.51	871.46	12/11/42	24.66	873.31	03/13/43	23.86	874.11	06/01/43	24.12	873.85
09/17/42	26.51	871.46	12/12/42	24.64	873.33	03/14/43	23.87	874.10	06/02/43	24.10	873.87
09/18/42	26.51	871.46	12/13/42	24.63	873.34	03/15/43	23.87	874.10	06/03/43	24.08	873.89
09/19/42	26.51	871.46	12/14/42	24.62	873.35	03/16/43	23.86	874.11	06/04/43	24.07	873.90
09/20/42	26.50	871.47	12/15/42	24.62	873.35	03/17/43	23.84	874.13	06/05/43	24.05	873.92
09/21/42	26.49	871.48	12/16/42	24.62	873.35	03/18/43	23.82	874.15	06/06/43	24.04	873.93
09/22/42	26.47	871.50	12/17/42	24.61	873.36	03/19/43	23.81	874.16	06/07/43	24.03	873.94
09/23/42	26.46	871.51	12/18/42	24.58	873.39	03/20/43	23.80	874.17	06/08/43	24.02	873.95
09/24/42	26.43	871.54	12/26/42	24.49	873.48	03/21/43	23.80	874.17	06/09/43	24.01	873.96
09/25/42	26.41	871.56	12/27/42	24.48	873.49	03/22/43	23.79	874.18	06/10/43	24.01	873.96
09/26/42	26.39	871.58	12/28/42	24.47	873.50	03/23/43	23.79	874.18	06/11/43	24.00	873.97
09/27/42	26.37	871.60	12/29/42	24.46	873.51	03/24/43	23.78	874.19	06/12/43	23.99	873.98
09/28/42	26.35	871.62	12/30/42	24.45	873.52	03/25/43	23.78	874.19	06/13/43	23.98	873.99

139-048-06CDD **(Continued)** MP Elev (msl,ft)=897.97

Fargo Aquifer SI (ft.)=0-0

Date	Depth to Water (ft)	WL Elev (msl, ft)	Date	Depth to Water (ft)	WL Elev (msl, ft)	Date	Depth to Water (ft)	WL Elev (msl, ft)	Date	Depth to Water (ft)	WL Elev (msl, ft)
06/14/43	23.97	874.00	09/02/43	23.62	874.35	11/21/43	23.70	874.27	02/08/44	23.66	874.31
06/15/43	23.96	874.01	09/03/43	23.62	874.35	11/22/43	23.70	874.27	02/09/44	23.65	874.32
06/16/43	23.95	874.02	09/04/43	23.63	874.34	11/23/43	23.71	874.26	02/10/44	23.66	874.31
06/17/43	23.94	874.03	09/05/43	23.63	874.34	11/24/43	23.71	874.26	02/11/44	23.67	874.30
06/18/43	23.93	874.04	09/06/43	23.63	874.34	11/25/43	23.71	874.26	02/12/44	23.67	874.30
06/19/43	23.92	874.05	09/07/43	23.63	874.34	11/26/43	23.71	874.26	02/13/44	23.67	874.30
06/20/43	23.91	874.06	09/08/43	23.63	874.34	11/27/43	23.71	874.26	02/14/44	23.66	874.31
06/21/43	23.90	874.07	09/09/43	23.63	874.34	11/28/43	23.71	874.26	02/15/44	23.66	874.31
06/22/43	23.90	874.07	09/10/43	23.64	874.33	11/29/43	23.70	874.27	02/16/44	23.66	874.31
06/23/43	23.89	874.08	09/11/43	23.64	874.33	11/30/43	23.70	874.27	02/17/44	23.66	874.31
06/24/43	23.89	874.08	09/12/43	23.64	874.33	12/01/43	23.70	874.27	02/18/44	23.67	874.30
06/25/43	23.88	874.09	09/13/43	23.64	874.33	12/02/43	23.70	874.27	02/19/44	23.67	874.30
06/26/43	23.88	874.09	09/14/43	23.64	874.33	12/03/43	23.70	874.27	02/20/44	23.67	874.30
06/27/43	23.88	874.09	09/15/43	23.64	874.33	12/04/43	23.70	874.27	02/21/44	23.67	874.30
06/28/43	23.87	874.10	09/16/43	23.65	874.32	12/05/43	23.70	874.27	02/22/44	23.66	874.31
06/29/43	23.86	874.11	09/17/43	23.65	874.32	12/06/43	23.70	874.27	02/23/44	23.66	874.31
06/30/43	23.85	874.12	09/18/43	23.65	874.32	12/07/43	23.69	874.28	02/24/44	23.66	874.31
07/01/43	23.85	874.12	09/19/43	23.65	874.32	12/08/43	23.69	874.28	02/25/44	23.66	874.31
07/02/43	23.85	874.12	09/20/43	23.65	874.32	12/09/43	23.69	874.28	02/26/44	23.66	874.31
07/03/43	23.83	874.14	09/21/43	23.65	874.32	12/10/43	23.69	874.28	02/27/44	23.66	874.31
07/04/43	23.83	874.14	09/22/43	23.65	874.32	12/11/43	23.69	874.28	02/28/44	23.66	874.31
07/05/43	23.82	874.15	09/23/43	23.66	874.31	12/12/43	23.69	874.28	02/29/44	23.66	874.31
07/06/43	23.82	874.15	09/24/43	23.66	874.31	12/13/43	23.68	874.29	03/01/44	23.67	874.30
07/07/43	23.82	874.15	09/25/43	23.66	874.31	12/14/43	23.68	874.29	03/02/44	23.67	874.30
07/08/43	23.82	874.15	09/26/43	23.66	874.31	12/15/43	23.69	874.28	03/03/44	23.67	874.30
07/09/43	23.81	874.16	09/27/43	23.66	874.31	12/16/43	23.69	874.28	03/04/44	23.67	874.30
07/10/43	23.80	874.17	09/28/43	23.67	874.30	12/17/43	23.69	874.28	03/05/44	23.67	874.30
07/11/43	23.80	874.17	09/29/43	23.67	874.30	12/18/43	23.70	874.27	03/06/44	23.67	874.30
07/12/43	23.80	874.17	09/30/43	23.68	874.29	12/19/43	23.70	874.27	03/07/44	23.66	874.31
07/13/43	23.79	874.18	10/01/43	23.68	874.29	12/20/43	23.70	874.27	03/08/44	23.66	874.31
07/14/43	23.79	874.18	10/02/43	23.68	874.29	12/21/43	23.69	874.28	03/09/44	23.66	874.31
07/15/43	23.79	874.18	10/03/43	23.68	874.29	12/22/43	23.70	874.27	03/10/44	23.66	874.31
07/16/43	23.79	874.18	10/04/43	23.69	874.28	12/23/43	23.70	874.27	03/11/44	23.66	874.31
07/17/43	23.78	874.19	10/05/43	23.69	874.28	12/24/43	23.70	874.27	03/12/44	23.65	874.32
07/18/43	23.78	874.19	10/06/43	23.70	874.27	12/25/43	23.70	874.27	03/13/44	23.65	874.32
07/19/43	23.78	874.19	10/07/43	23.70	874.27	12/26/43	23.70	874.27	03/14/44	23.65	874.32
07/20/43	23.78	874.19	10/08/43	23.71	874.26	12/27/43	23.70	874.27	03/15/44	23.65	874.32
07/21/43	23.77	874.20	10/09/43	23.71	874.26	12/28/43	23.69	874.28	03/16/44	23.65	874.32
07/22/43	23.77	874.20	10/10/43	23.71	874.26	12/29/43	23.69	874.28	03/17/44	23.65	874.32
07/23/43	23.77	874.20	10/11/43	23.71	874.26	12/30/43	23.69	874.28	03/18/44	23.65	874.32
07/24/43	23.77	874.20	10/12/43	23.71	874.26	12/31/43	23.69	874.28	03/19/44	23.65	874.32
07/25/43	23.77	874.20	10/13/43	23.72	874.25				03/20/44	23.65	874.32
07/26/43	23.77	874.20	10/14/43	23.72	874.25	01/01/44	23.70	874.27	03/21/44	23.65	874.32
07/27/43	23.77	874.20	10/15/43	23.72	874.25	01/02/44	23.70	874.27	03/22/44	23.65	874.32
07/28/43	23.77	874.20	10/16/43	23.72	874.25	01/03/44	23.69	874.28	03/23/44	23.65	874.32
07/29/43	23.77	874.20	10/17/43	23.72	874.25	01/04/44	23.69	874.28	03/24/44	23.65	874.32
07/30/43	23.77	874.20	10/18/43	23.72	874.25	01/05/44	23.69	874.28	03/25/44	23.64	874.33
07/31/43	23.77	874.20	10/19/43	23.72	874.25	01/06/44	23.69	874.28	03/26/44	23.64	874.33
08/01/43	23.77	874.20	10/20/43	23.71	874.26	01/07/44	23.70	874.27	03/27/44	23.64	874.33
08/02/43	23.77	874.20	10/21/43	23.71	874.26	01/08/44	23.70	874.27	03/28/44	23.64	874.33
08/03/43	23.77	874.20	10/22/43	23.71	874.26	01/09/44	23.70	874.27	03/29/44	23.64	874.33
08/04/43	23.77	874.20	10/23/43	23.71	874.26	01/10/44	23.70	874.27	03/30/44	23.64	874.33
08/05/43	23.77	874.20	10/24/43	23.71	874.26	01/11/44	23.70	874.27	03/31/44	23.63	874.34
08/06/43	23.77	874.20	10/25/43	23.71	874.26	01/12/44	23.70	874.27	04/01/44	23.63	874.34
08/07/43	23.77	874.20	10/26/43	23.71	874.26	01/13/44	23.70	874.27	04/02/44	23.63	874.34
08/08/43	23.77	874.20	10/27/43	23.71	874.26	01/14/44	23.70	874.27	04/03/44	23.63	874.34
08/09/43	23.55	874.42	10/28/43	23.71	874.26	01/15/44	23.70	874.27	04/04/44	23.63	874.34
08/10/43	23.55	874.42	10/29/43	23.71	874.26	01/16/44	23.70	874.27	04/05/44	23.63	874.34
08/11/43	23.55	874.42	10/30/43	23.71	874.26	01/17/44	23.70	874.27	04/06/44	23.63	874.34
08/12/43	23.55	874.42	10/31/43	23.71	874.26	01/18/44	23.70	874.27	04/07/44	23.63	874.34
08/13/43	23.55	874.42	11/01/43	23.70	874.27	01/19/44	23.69	874.28	04/08/44	23.63	874.34
08/14/43	23.55	874.42	11/02/43	23.70	874.27	01/20/44	23.69	874.28	04/09/44	23.63	874.34
08/15/43	23.55	874.42	11/03/43	23.70	874.27	01/21/44	23.69	874.28	04/10/44	23.63	874.34
08/16/43	23.55	874.42	11/04/43	23.70	874.27	01/22/44	23.69	874.28	04/11/44	23.63	874.34
08/17/43	23.55	874.42	11/05/43	23.70	874.27	01/23/44	23.69	874.28	04/12/44	23.63	874.34
08/18/43	23.56	874.41	11/06/43	23.70	874.27	01/24/44	23.69	874.28	04/13/44	23.63	874.34
08/19/43	23.57	874.40	11/07/43	23.70	874.27	01/25/44	23.69	874.28	04/14/44	23.64	874.33
08/20/43	23.58	874.39	11/08/43	23.70	874.27	01/26/44	23.68	874.29	04/15/44	23.64	874.33
08/21/43	23.59	874.38	11/09/43	23.70	874.27	01/27/44	23.68	874.29	04/16/44	23.64	874.33
08/22/43	23.59	874.38	11/10/43	23.70	874.27	01/28/44	23.68	874.29	04/17/44	23.63	874.34
08/23/43	23.59	874.38	11/11/43	23.70	874.27	01/29/44	23.68	874.29	04/18/44	23.63	874.34
08/24/43	23.59	874.38	11/12/43	23.70	874.27	01/30/44	23.68	874.29	04/19/44	23.63	874.34
08/25/43	23.59	874.38	11/13/43	23.70	874.27	01/31/44	23.68	874.29	04/20/44	23.63	874.34
08/26/43	23.59	874.38	11/14/43	23.70	874.27	02/01/44	23.67	874.30	04/21/44	23.64	874.33
08/27/43	23.60	874.37	11/15/43	23.70	874.27	02/02/44	23.67	874.30	04/22/44	23.64	874.33
08/28/43	23.61	874.36	11/16/43	23.70	874.27	02/03/44	23.67	874.30	04/23/44	23.64	874.33
08/29/43	23.61	874.36	11/17/43	23.70	874.27	02/04/44	23.67	874.30	04/24/44	23.64	874.33
08/30/43	23.61	874.36	11/18/43	23.70	874.27	02/05/44	23.67	874.30	04/25/44	23.64	874.33
08/31/43	23.61	874.36	11/19/43	23.70	874.27	02/06/44	23.66	874.31	04/26/44	23.64	874.33
09/01/43	23.62	874.35	11/20/43	23.70	874.27	02/07/44	23.66	874.31	04/27/44	23.64	874.33

139-048-06CDD **(Continued)** MP Elev (msl,ft)=897.97

Fargo Aquifer SI (ft.)=0-0

Date	Depth to Water (ft)	WL Elev (msl, ft)
04/28/44	23.64	874.33
04/29/44	23.64	874.33
04/30/44	23.64	874.33
05/01/44	23.63	874.34
05/02/44	23.63	874.34
05/03/44	23.62	874.35
05/04/44	23.62	874.35
05/05/44	23.62	874.35
05/06/44	23.62	874.35
05/07/44	23.62	874.35
05/08/44	23.62	874.35
05/09/44	23.62	874.35
05/10/44	23.62	874.35
05/11/44	23.62	874.35
05/12/44	23.61	874.36
05/13/44	23.60	874.37
05/14/44	23.60	874.37
05/15/44	23.60	874.37
05/16/44	23.60	874.37
05/17/44	23.59	874.38
05/18/44	23.59	874.38
05/19/44	23.59	874.38
05/20/44	23.58	874.39
05/21/44	23.58	874.39
05/22/44	23.57	874.40
05/23/44	23.56	874.41
05/24/44	23.56	874.41
05/25/44	23.56	874.41
05/26/44	23.55	874.42
05/27/44	23.54	874.43
05/28/44	23.54	874.43
05/29/44	23.54	874.43
05/30/44	23.54	874.43
05/31/44	23.54	874.43
06/01/44	23.54	874.43
06/02/44	23.54	874.43
06/03/44	23.54	874.43
06/04/44	23.53	874.44
06/05/44	23.53	874.44
06/06/44	23.53	874.44
06/07/44	23.52	874.45
06/08/44	23.52	874.45
06/09/44	23.52	874.45
06/10/44	23.51	874.46
06/11/44	23.51	874.46
06/12/44	23.51	874.46
06/13/44	23.51	874.46
06/14/44	23.50	874.47
06/15/44	23.50	874.47
06/16/44	23.50	874.47
06/17/44	23.50	874.47
06/18/44	23.50	874.47
06/19/44	23.50	874.47
06/20/44	23.50	874.47
06/21/44	23.50	874.47
06/22/44	23.50	874.47
06/23/44	23.50	874.47
06/24/44	23.50	874.47
06/25/44	23.50	874.47
06/26/44	23.50	874.47
06/27/44	23.50	874.47
06/28/44	23.50	874.47
06/29/44	23.51	874.46
06/30/44	23.51	874.46
07/07/44	23.53	874.44
07/14/44	23.50	874.47
07/15/44	23.48	874.49
07/16/44	23.48	874.49
07/17/44	23.48	874.49
07/18/44	23.47	874.50
07/19/44	23.47	874.50
07/20/44	23.47	874.50
07/21/44	23.48	874.49
07/22/44	23.48	874.49
07/23/44	23.48	874.49
07/24/44	23.48	874.49
07/25/44	23.48	874.49
07/26/44	23.48	874.49
07/27/44	23.47	874.50
07/28/44	23.48	874.49
07/29/44	23.48	874.49
07/30/44	23.48	874.49
07/31/44	23.48	874.49
08/01/44	23.49	874.48
08/02/44	23.49	874.48
08/03/44	23.49	874.48
08/04/44	23.49	874.48
08/05/44	23.49	874.48
08/06/44	23.48	874.49
08/07/44	23.48	874.49
08/08/44	23.47	874.50
08/11/44	23.47	874.50
08/12/44	23.47	874.50
08/13/44	23.47	874.50
08/14/44	23.46	874.51
08/15/44	23.46	874.51
08/18/44	23.46	874.51
08/19/44	23.46	874.51
08/20/44	23.46	874.51
08/21/44	23.46	874.51
08/22/44	23.46	874.51
08/23/44	23.46	874.51
08/24/44	23.47	874.50
08/25/44	23.47	874.50
08/26/44	23.47	874.50
08/27/44	23.47	874.50
08/28/44	23.47	874.50
08/29/44	23.47	874.50
09/01/44	23.47	874.50
09/02/44	23.47	874.50
09/03/44	23.47	874.50
09/08/44	23.46	874.51
09/09/44	23.46	874.51
09/10/44	23.46	874.51
09/11/44	23.46	874.51
09/12/44	23.46	874.51
09/15/44	23.46	874.51
09/16/44	23.46	874.51
09/17/44	23.46	874.51
09/18/44	23.46	874.51
09/19/44	23.45	874.52
09/20/44	23.45	874.52
09/21/44	23.45	874.52
09/22/44	23.46	874.51
09/23/44	23.46	874.51
09/24/44	23.47	874.50
09/25/44	23.47	874.50
09/26/44	23.48	874.49
09/27/44	23.48	874.49
09/28/44	23.48	874.49
09/29/44	23.49	874.48
09/30/44	23.49	874.48
10/01/44	23.49	874.48
10/02/44	23.49	874.48
10/03/44	23.50	874.47
10/04/44	23.50	874.47
10/05/44	23.50	874.47
10/06/44	23.50	874.47
10/07/44	23.50	874.47
10/08/44	23.50	874.47
10/09/44	23.51	874.46
10/10/44	23.51	874.46
10/11/44	23.51	874.46
10/12/44	23.51	874.46
10/13/44	23.51	874.46
10/14/44	23.51	874.46
10/15/44	23.51	874.46
10/16/44	23.52	874.45
10/17/44	23.52	874.45
10/18/44	23.52	874.45
10/19/44	23.53	874.44
10/20/44	23.55	874.42
10/21/44	23.55	874.42
10/22/44	23.55	874.42
10/23/44	23.55	874.42
10/24/44	23.55	874.42
10/25/44	23.55	874.42
10/26/44	23.56	874.41
10/27/44	23.56	874.41
10/28/44	23.56	874.41
10/29/44	23.56	874.41
10/30/44	23.57	874.40
10/31/44	23.57	874.40
11/01/44	23.57	874.40
11/02/44	23.56	874.41
11/03/44	23.56	874.41
11/04/44	23.56	874.41
11/05/44	23.57	874.40
11/06/44	23.57	874.40
11/07/44	23.57	874.40
11/08/44	23.57	874.40
11/09/44	23.57	874.40
11/10/44	23.57	874.40
11/11/44	23.57	874.40
11/12/44	23.57	874.40
11/13/44	23.57	874.40
11/14/44	23.57	874.40
11/15/44	23.56	874.41
11/16/44	23.56	874.41
11/17/44	23.57	874.40
11/18/44	23.57	874.40
11/19/44	23.57	874.40
11/20/44	23.57	874.40
11/21/44	23.57	874.40
11/22/44	23.57	874.40
11/23/44	23.57	874.40
11/24/44	23.58	874.39
11/25/44	23.58	874.39
11/26/44	23.58	874.39
11/27/44	23.57	874.40
11/28/44	23.57	874.40
11/29/44	23.57	874.40
11/30/44	23.57	874.40
12/01/44	23.57	874.40
12/02/44	23.57	874.40
12/03/44	23.57	874.40
12/04/44	23.57	874.40
12/05/44	23.57	874.40
12/06/44	23.56	874.41
12/07/44	23.56	874.41
12/08/44	23.56	874.41
12/09/44	23.56	874.41
12/10/44	23.56	874.41
12/11/44	23.56	874.41
12/12/44	23.56	874.41
12/13/44	23.56	874.41
12/14/44	23.56	874.41
12/15/44	23.56	874.41
12/16/44	23.56	874.41
12/17/44	23.56	874.41
12/18/44	23.56	874.41
12/19/44	23.56	874.41
12/20/44	23.56	874.41
12/21/44	23.56	874.41
12/22/44	23.56	874.41
12/23/44	23.55	874.42
12/24/44	23.55	874.42
12/25/44	23.55	874.42
12/26/44	23.55	874.42
12/27/44	23.55	874.42
12/28/44	23.55	874.42
12/29/44	23.55	874.42
12/30/44	23.55	874.42
12/31/44	23.55	874.42
01/01/45	23.55	874.42
01/02/45	23.55	874.42
01/03/45	23.55	874.42
01/04/45	23.55	874.42
01/05/45	23.56	874.41
01/06/45	23.56	874.41
01/07/45	23.56	874.41
01/08/45	23.56	874.41
01/09/45	23.56	874.41
01/10/45	23.56	874.41
01/11/45	23.56	874.41
01/12/45	23.54	874.43
01/13/45	23.54	874.43
01/14/45	23.54	874.43
01/15/45	23.54	874.43
01/16/45	23.54	874.43
01/17/45	23.54	874.43
01/18/45	23.54	874.43
01/19/45	23.55	874.42
01/20/45	23.55	874.42
01/21/45	23.55	874.42
01/22/45	23.55	874.42
01/23/45	23.55	874.42
01/24/45	23.55	874.42
01/25/45	23.55	874.42
01/26/45	23.55	874.42
01/27/45	23.55	874.42
01/28/45	23.55	874.42
01/29/45	23.55	874.42
01/30/45	23.55	874.42
01/31/45	23.56	874.41
02/01/45	23.56	874.41
02/02/45	23.58	874.39
02/03/45	23.58	874.39
02/04/45	23.58	874.39
02/05/45	23.58	874.39
02/06/45	23.58	874.39
02/07/45	23.58	874.39
02/08/45	23.58	874.39
02/09/45	23.58	874.39
02/10/45	23.58	874.39
02/11/45	23.58	874.39
02/12/45	23.58	874.39
02/13/45	23.58	874.39
02/14/45	23.58	874.39
02/15/45	23.57	874.40
02/16/45	23.57	874.40
02/17/45	23.57	874.40
02/18/45	23.58	874.39
02/19/45	23.58	874.39
02/20/45	23.58	874.39
02/21/45	23.58	874.39
02/22/45	23.58	874.39
02/23/45	23.58	874.39
02/24/45	23.58	874.39
02/25/45	23.58	874.39
02/26/45	23.58	874.39
02/27/45	23.58	874.39
02/28/45	23.58	874.39
03/01/45	23.58	874.39
03/02/45	23.58	874.39
03/03/45	23.57	874.40
03/04/45	23.57	874.40
03/05/45	23.57	874.40
03/06/45	23.57	874.40
03/07/45	23.57	874.40
03/08/45	23.58	874.39
03/09/45	23.58	874.39
03/10/45	23.58	874.39
03/11/45	23.58	874.39
03/12/45	23.58	874.39
03/13/45	23.58	874.39
03/14/45	23.58	874.39
03/15/45	23.58	874.39
03/16/45	23.58	874.39
03/17/45	23.58	874.39
03/18/45	23.58	874.39
03/19/45	23.58	874.39
03/20/45	23.58	874.39
03/21/45	23.58	874.39
03/22/45	23.58	874.39
03/23/45	23.57	874.40
03/24/45	23.57	874.40
03/25/45	23.56	874.41
03/26/45	23.56	874.41
03/27/45	23.56	874.41
03/28/45	23.56	874.41
03/29/45	23.56	874.41
03/30/45	23.55	874.42
03/31/45	23.54	874.43
04/01/45	23.54	874.43
04/02/45	23.54	874.43
04/03/45	23.54	874.43
04/04/45	23.54	874.43
04/05/45	23.54	874.43

139-048-06CDD **(Continued)** MP Elev (msl,ft)=897.97

Fargo Aquifer SI (ft.)=0-0

Date	Depth to Water (ft)	WL Elev (msl, ft)	Date	Depth to Water (ft)	WL Elev (msl, ft)	Date	Depth to Water (ft)	WL Elev (msl, ft)	Date	Depth to Water (ft)	WL Elev (msl, ft)
04/06/45	23.54	874.43	06/25/45	23.66	874.31	09/19/45	24.06	873.91	12/22/45	24.30	873.67
04/07/45	23.54	874.43	06/26/45	23.66	874.31	09/20/45	24.06	873.91	12/23/45	24.30	873.67
04/08/45	23.54	874.43	06/27/45	23.66	874.31	09/21/45	24.06	873.91	12/24/45	24.30	873.67
04/09/45	23.54	874.43	06/28/45	23.67	874.30	09/22/45	24.06	873.91	12/25/45	24.30	873.67
04/10/45	23.54	874.43	06/29/45	23.68	874.29	09/23/45	24.06	873.91	12/26/45	24.30	873.67
04/11/45	23.54	874.43	06/30/45	23.69	874.28	09/24/45	24.06	873.91	12/27/45	24.30	873.67
04/12/45	23.53	874.44	07/01/45	23.69	874.28	09/25/45	24.06	873.91	12/28/45	24.30	873.67
04/13/45	23.53	874.44	07/02/45	23.70	874.27	09/26/45	24.06	873.91	12/29/45	24.30	873.67
04/14/45	23.54	874.43	07/03/45	23.70	874.27	09/27/45	24.07	873.90	12/30/45	24.30	873.67
04/15/45	23.54	874.43	07/04/45	23.71	874.26	09/28/45	24.09	873.88	12/31/45	24.30	873.67
04/16/45	23.54	874.43	07/05/45	23.71	874.26	09/29/45	24.10	873.87			
04/17/45	23.54	874.43	07/06/45	23.72	874.25	09/30/45	24.10	873.87	01/04/46	24.30	873.67
04/18/45	23.54	874.43	07/07/45	23.72	874.25	10/01/45	24.10	873.87	01/05/46	24.30	873.67
04/19/45	23.53	874.44	07/08/45	23.73	874.24	10/02/45	24.11	873.86	01/06/46	24.30	873.67
04/20/45	23.53	874.44	07/09/45	23.73	874.24	10/03/45	24.11	873.86	01/07/46	24.30	873.67
04/21/45	23.53	874.44	07/10/45	23.74	874.23	10/04/45	24.11	873.86	01/08/46	24.30	873.67
04/22/45	23.54	874.43	07/11/45	23.74	874.23	10/05/45	24.12	873.85	01/09/46	24.30	873.67
04/23/45	23.54	874.43	07/12/45	23.75	874.22	10/06/45	24.12	873.85	01/10/46	24.30	873.67
04/24/45	23.54	874.43	07/13/45	23.76	874.21	10/07/45	24.12	873.85	01/11/46	24.30	873.67
04/25/45	23.54	874.43	07/14/45	23.77	874.20	10/08/45	24.13	873.84	01/12/46	24.31	873.66
04/26/45	23.54	874.43	07/15/45	23.77	874.20	10/09/45	24.13	873.84	01/13/46	24.31	873.66
04/27/45	23.54	874.43	07/16/45	23.77	874.20	10/10/45	24.13	873.84	01/14/46	24.31	873.66
04/28/45	23.54	874.43	07/17/45	23.79	874.18	10/11/45	24.13	873.84	01/15/46	24.31	873.66
04/29/45	23.54	874.43	07/18/45	23.79	874.18	10/12/45	24.13	873.84	01/16/46	24.31	873.66
04/30/45	23.55	874.42	07/19/45	23.80	874.17	10/13/45	24.13	873.84	01/17/46	24.32	873.65
05/01/45	23.55	874.42	07/20/45	23.81	874.16	10/14/45	24.13	873.84	01/18/46	24.32	873.65
05/02/45	23.55	874.42	07/21/45	23.81	874.16	10/15/45	24.14	873.83	01/19/46	24.32	873.65
05/03/45	23.55	874.42	07/22/45	23.81	874.16	10/16/45	24.14	873.83	01/20/46	24.32	873.65
05/04/45	23.55	874.42	07/23/45	23.82	874.15	10/17/45	24.14	873.83	01/21/46	24.33	873.64
05/05/45	23.55	874.42	07/24/45	23.82	874.15	10/18/45	24.15	873.82	01/22/46	24.33	873.64
05/06/45	23.55	874.42	07/25/45	23.83	874.14	10/19/45	24.15	873.82	01/23/46	24.33	873.64
05/07/45	23.55	874.42	07/26/45	23.84	874.13	10/20/45	24.15	873.82	01/24/46	24.34	873.63
05/08/45	23.55	874.42	07/27/45	23.84	874.13	10/21/45	24.15	873.82	01/25/46	24.34	873.63
05/09/45	23.55	874.42	07/28/45	23.85	874.12	10/22/45	24.15	873.82	01/26/46	24.34	873.63
05/10/45	23.55	874.42	07/29/45	23.85	874.12	10/23/45	24.16	873.81	01/27/46	24.34	873.63
05/11/45	23.55	874.42	07/30/45	23.85	874.12	10/24/45	24.16	873.81	01/28/46	24.34	873.63
05/12/45	23.55	874.42	07/31/45	23.86	874.11	10/25/45	24.16	873.81	01/29/46	24.34	873.63
05/13/45	23.55	874.42	08/01/45	23.86	874.11	10/26/45	24.17	873.80	01/30/46	24.34	873.63
05/14/45	23.55	874.42	08/02/45	23.87	874.10	10/27/45	24.17	873.80	01/31/46	24.34	873.63
05/15/45	23.56	874.41	08/03/45	23.87	874.10	10/28/45	24.17	873.80	02/01/46	24.34	873.63
05/16/45	23.56	874.41	08/04/45	23.88	874.09	10/29/45	24.18	873.79	02/02/46	24.34	873.63
05/17/45	23.57	874.40	08/05/45	23.88	874.09	10/30/45	24.18	873.79	02/03/46	24.34	873.63
05/18/45	23.58	874.39	08/06/45	23.88	874.09	10/31/45	24.18	873.79	02/04/46	24.34	873.63
05/19/45	23.58	874.39	08/07/45	23.89	874.08	11/01/45	24.18	873.79	02/05/46	24.34	873.63
05/20/45	23.58	874.39	08/08/45	23.90	874.07	11/02/45	24.18	873.79	02/06/46	24.34	873.63
05/21/45	23.58	874.39	08/09/45	23.91	874.06	11/10/45	24.19	873.78	02/07/46	24.33	873.64
05/22/45	23.58	874.39	08/10/45	23.91	874.06	11/11/45	24.19	873.78	02/08/46	24.33	873.64
05/23/45	23.58	874.39	08/11/45	23.91	874.06	11/12/45	24.20	873.77	02/09/46	24.33	873.64
05/24/45	23.59	874.38	08/12/45	23.91	874.06	11/13/45	24.20	873.77	02/10/46	24.32	873.65
05/25/45	23.60	874.37	08/13/45	23.91	874.06	11/14/45	24.20	873.77	02/11/46	24.32	873.65
05/26/45	23.60	874.37	08/14/45	23.91	874.06	11/15/45	24.21	873.76	02/12/46	24.31	873.66
05/27/45	23.60	874.37	08/15/45	23.91	874.06	11/16/45	24.21	873.76	02/13/46	24.30	873.67
05/28/45	23.60	874.37	08/16/45	23.93	874.04	11/17/45	24.21	873.76	02/14/46	24.29	873.68
05/29/45	23.61	874.36	08/17/45	23.93	874.04	11/18/45	24.21	873.76	02/15/46	24.28	873.69
05/30/45	23.61	874.36	08/18/45	23.93	874.04	11/19/45	24.21	873.76	02/16/46	24.27	873.70
05/31/45	23.61	874.36	08/19/45	23.93	874.04	11/20/45	24.21	873.76	02/17/46	24.26	873.71
06/01/45	23.62	874.35	08/20/45	23.93	874.04	11/21/45	24.22	873.75	02/18/46	24.26	873.71
06/02/45	23.62	874.35	08/21/45	23.94	874.03	11/22/45	24.22	873.75	02/19/46	24.26	873.71
06/03/45	23.62	874.35	08/22/45	23.95	874.02	11/23/45	24.22	873.75	02/20/46	24.26	873.71
06/04/45	23.62	874.35	08/23/45	23.95	874.02	11/24/45	24.21	873.76	02/21/46	24.25	873.72
06/05/45	23.62	874.35	08/24/45	23.98	873.99	11/25/45	24.21	873.76	02/22/46	24.25	873.72
06/06/45	23.63	874.34	08/31/45	24.00	873.97	11/26/45	24.21	873.76	02/23/46	24.25	873.72
06/07/45	23.63	874.34	09/01/45	24.00	873.97	11/27/45	24.22	873.75	02/24/46	24.25	873.72
06/08/45	23.63	874.34	09/02/45	24.00	873.97	11/28/45	24.22	873.75	02/25/46	24.25	873.72
06/09/45	23.63	874.34	09/03/45	24.01	873.96	11/29/45	24.23	873.74	02/26/46	24.24	873.73
06/10/45	23.63	874.34	09/04/45	24.01	873.96	11/30/45	24.24	873.73	02/27/46	24.24	873.73
06/11/45	23.63	874.34	09/05/45	24.01	873.96	12/01/45	24.24	873.73	02/28/46	24.23	873.74
06/12/45	23.63	874.34	09/06/45	24.02	873.95	12/02/45	24.24	873.73	03/01/46	24.22	873.75
06/13/45	23.63	874.34	09/07/45	24.03	873.94	12/03/45	24.24	873.73	03/02/46	24.22	873.75
06/14/45	23.63	874.34	09/08/45	24.03	873.94	12/04/45	24.25	873.72	03/03/46	24.22	873.75
06/15/45	23.63	874.34	09/09/45	24.03	873.94	12/05/45	24.25	873.72	03/04/46	24.22	873.75
06/16/45	23.63	874.34	09/10/45	24.03	873.94	12/06/45	24.25	873.72	03/05/46	24.22	873.75
06/17/45	23.63	874.34	09/11/45	24.03	873.94	12/07/45	24.25	873.72	03/06/46	24.22	873.75
06/18/45	23.64	874.33	09/12/45	24.04	873.93	12/15/45	24.30	873.67	03/07/46	24.22	873.75
06/19/45	23.64	874.33	09/13/45	24.04	873.93	12/16/45	24.30	873.67	03/08/46	24.21	873.76
06/20/45	23.64	874.33	09/14/45	24.05	873.92	12/17/45	24.30	873.67	03/09/46	24.21	873.76
06/21/45	23.65	874.32	09/15/45	24.05	873.92	12/18/45	24.30	873.67	03/10/46	24.21	873.76
06/22/45	23.65	874.32	09/16/45	24.05	873.92	12/19/45	24.32	873.65	03/11/46	24.21	873.76
06/23/45	23.65	874.32	09/17/45	24.06	873.91	12/20/45	24.32	873.65	03/12/46	24.21	873.76
06/24/45	23.65	874.32	09/18/45	24.06	873.91	12/21/45	24.32	873.65	03/13/46	24.21	873.76

139-048-06CDD **(Continued)** MP Elev (msl,ft)=897.97

Fargo Aquifer SI (ft.)=0-0

Date	Depth to Water (ft)	WL Elev (msl, ft)
03/14/46	24.21	873.76
03/15/46	24.21	873.76
03/16/46	24.21	873.76
03/17/46	24.22	873.75
03/18/46	24.23	873.74
03/19/46	24.23	873.74
03/20/46	24.24	873.73
03/21/46	24.24	873.73
03/22/46	24.24	873.73
03/23/46	24.24	873.73
03/24/46	24.24	873.73
03/25/46	24.24	873.73
03/26/46	24.24	873.73
03/27/46	24.24	873.73
03/28/46	24.25	873.72
03/29/46	24.25	873.72
03/30/46	24.25	873.72
03/31/46	24.25	873.72
04/01/46	24.25	873.72
04/02/46	24.25	873.72
04/03/46	24.25	873.72
04/04/46	24.26	873.71
04/05/46	24.27	873.70
04/06/46	24.27	873.70
04/07/46	24.27	873.70
04/08/46	24.26	873.71
04/09/46	24.26	873.71
04/10/46	24.27	873.70
04/11/46	24.29	873.68
04/12/46	24.31	873.66
04/13/46	24.31	873.66
04/14/46	24.31	873.66
04/15/46	24.31	873.66
04/16/46	24.31	873.66
04/17/46	24.31	873.66
04/18/46	24.32	873.65
04/19/46	24.33	873.64
04/20/46	24.33	873.64
04/21/46	24.33	873.64
04/22/46	24.34	873.63
04/23/46	24.34	873.63
04/24/46	24.34	873.63
04/25/46	24.35	873.62
04/26/46	24.35	873.62
04/27/46	24.35	873.62
04/28/46	24.35	873.62
04/29/46	24.36	873.61
04/30/46	24.36	873.61
05/01/46	24.36	873.61
05/02/46	24.37	873.60
05/03/46	24.37	873.60
05/04/46	24.37	873.60
05/05/46	24.37	873.60
05/06/46	24.37	873.60
05/07/46	24.38	873.59
05/08/46	24.38	873.59
05/09/46	24.38	873.59
05/10/46	24.39	873.58
05/11/46	24.39	873.58
05/12/46	24.39	873.58
05/13/46	24.39	873.58
05/14/46	24.39	873.58
05/15/46	24.40	873.57
05/16/46	24.40	873.57
05/17/46	24.41	873.56
05/18/46	24.41	873.56
05/19/46	24.41	873.56
05/20/46	24.42	873.55
05/21/46	24.42	873.55
05/22/46	24.42	873.55
05/23/46	24.42	873.55
05/24/46	24.43	873.54
05/25/46	24.43	873.54
05/26/46	24.44	873.53
05/27/46	24.44	873.53
05/28/46	24.44	873.53
05/29/46	24.45	873.52
05/30/46	24.45	873.52
05/31/46	24.45	873.52
06/01/46	24.45	873.52
06/02/46	24.45	873.52
06/03/46	24.45	873.52
06/04/46	24.45	873.52
06/05/46	24.45	873.52
06/06/46	24.45	873.52
06/07/46	24.46	873.51
06/08/46	24.46	873.51
06/09/46	24.46	873.51
06/10/46	24.46	873.51
06/11/46	24.46	873.51
06/12/46	24.46	873.51
06/13/46	24.47	873.50
06/14/46	24.48	873.49
06/15/46	24.48	873.49
06/16/46	24.48	873.49
06/17/46	24.48	873.49
06/18/46	24.48	873.49
06/19/46	24.49	873.48
06/20/46	24.50	873.47
06/21/46	24.51	873.46
06/22/46	24.51	873.46
06/23/46	24.51	873.46
06/24/46	24.51	873.46
06/25/46	24.51	873.46
06/26/46	24.51	873.46
06/27/46	24.51	873.46
06/28/46	24.51	873.46
06/29/46	24.51	873.46
06/30/46	24.51	873.46
07/01/46	24.51	873.46
07/02/46	24.51	873.46
07/03/46	24.51	873.46
07/04/46	24.51	873.46
07/05/46	24.52	873.45
07/06/46	24.52	873.45
07/07/46	24.52	873.45
07/08/46	24.52	873.45
07/09/46	24.52	873.45
07/10/46	24.52	873.45
07/11/46	24.52	873.45
07/12/46	24.52	873.45
07/13/46	24.52	873.45
07/14/46	24.52	873.45
07/15/46	24.53	873.44
07/16/46	24.54	873.43
07/17/46	24.55	873.42
07/18/46	24.57	873.40
07/19/46	24.59	873.38
07/20/46	24.59	873.38
07/21/46	24.60	873.37
07/22/46	24.60	873.37
07/23/46	24.60	873.37
07/24/46	24.61	873.36
07/25/46	24.62	873.35
07/26/46	24.63	873.34
08/02/46	24.66	873.31
08/03/46	24.66	873.31
08/04/46	24.67	873.30
08/05/46	24.68	873.29
08/06/46	24.69	873.28
08/07/46	24.72	873.25
08/08/46	24.76	873.21
08/09/46	24.80	873.17
08/10/46	24.84	873.13
08/11/46	24.90	873.07
08/12/46	24.96	873.01
08/13/46	25.03	872.94
08/14/46	25.11	872.86
08/15/46	25.19	872.78
08/16/46	25.29	872.68
08/17/46	25.36	872.61
08/18/46	25.47	872.50
08/19/46	25.56	872.41
08/20/46	25.66	872.31
08/21/46	25.77	872.20
08/22/46	25.93	872.04
08/23/46	26.06	871.91
08/24/46	26.16	871.81
08/25/46	26.25	871.72
08/26/46	26.35	871.62
08/27/46	26.47	871.50
08/28/46	26.55	871.42
08/29/46	26.65	871.32
08/30/46	26.76	871.21
08/31/46	26.84	871.13
09/01/46	26.91	871.06
09/02/46	26.99	870.98
09/03/46	27.06	870.91
09/04/46	27.14	870.83
09/05/46	27.23	870.74
09/06/46	27.34	870.63
09/07/46	27.41	870.56
09/08/46	27.47	870.50
09/09/46	27.53	870.44
09/10/46	27.59	870.38
09/11/46	27.65	870.32
09/12/46	27.70	870.27
09/13/46	27.75	870.22
09/14/46	27.79	870.18
09/15/46	27.83	870.14
09/16/46	27.86	870.11
09/17/46	27.91	870.06
09/18/46	27.93	870.04
09/19/46	27.95	870.02
09/20/46	27.96	870.01
09/21/46	27.97	870.00
09/22/46	27.99	869.98
09/23/46	28.00	869.97
09/24/46	28.01	869.96
09/25/46	28.03	869.94
09/26/46	28.04	869.93
09/27/46	28.05	869.92
09/28/46	28.05	869.92
09/29/46	28.29	869.68
09/30/46	28.05	869.92
10/01/46	28.05	869.92
10/02/46	28.05	869.92
10/03/46	28.00	869.97
10/04/46	28.02	869.95
10/08/46	28.00	869.97
10/09/46	27.99	869.98
10/10/46	27.97	870.00
10/11/46	27.92	870.05
10/12/46	27.85	870.12
10/13/46	27.83	870.14
10/14/46	27.82	870.15
10/15/46	27.80	870.17
10/16/46	27.77	870.20
10/17/46	27.73	870.24
10/18/46	27.72	870.25
10/19/46	27.70	870.27
10/20/46	27.68	870.29
10/21/46	27.66	870.31
10/22/46	27.63	870.34
10/23/46	27.60	870.37
10/24/46	27.57	870.40
10/25/46	27.55	870.42
10/26/46	27.51	870.46
10/27/46	27.49	870.48
10/28/46	27.47	870.50
10/29/46	27.45	870.52
10/30/46	27.43	870.54
10/31/46	27.40	870.57
11/01/46	27.36	870.61
11/02/46	27.33	870.64
11/03/46	27.33	870.64
11/04/46	27.30	870.67
11/05/46	27.29	870.68
11/06/46	27.27	870.70
11/07/46	27.24	870.73
11/08/46	27.21	870.76
11/09/46	27.17	870.80
11/10/46	27.15	870.82
11/11/46	27.13	870.84
11/12/46	27.11	870.86
11/13/46	27.09	870.88
11/14/46	27.07	870.90
11/15/46	27.04	870.93
12/06/46	26.67	871.30
12/07/46	26.65	871.32
12/08/46	26.63	871.34
12/09/46	26.61	871.36
12/10/46	26.60	871.37
12/11/46	26.57	871.40
12/12/46	26.55	871.42
12/13/46	26.52	871.45

138-049-29CCC MP Elev (msl,ft)=914.5

Horace Aquifer Sl (ft.)=258-278

Date	Depth to Water (ft)	WL Elev (msl, ft)	Date	Depth to Water (ft)	WL Elev (msl, ft)	Date	Depth to Water (ft)	WL Elev (msl, ft)	Date	Depth to Water (ft)	WL Elev (msl, ft)

08/01/64	33.97	880.53	05/23/70	38.99	875.51	03/30/79	44.64	869.86	12/10/86	59.40	855.10
09/03/64	35.40	879.10	06/23/70	38.93	875.57	06/18/79	45.13	869.37			
10/01/64	35.30	879.20	07/22/70	39.66	874.84	09/17/79	45.47	869.03	01/07/87	59.44	855.06
11/02/64	35.42	879.08	08/18/70	40.39	874.11	11/27/79	45.26	869.24	01/14/87	59.47	855.03
12/09/64	35.45	879.05	09/15/70	39.95	874.55				01/28/87	59.50	855.00
			10/16/70	39.77	874.73	03/25/80	44.94	869.56	03/03/87	59.49	855.01
01/18/65	35.48	879.02	11/13/70	39.66	874.84	04/13/80	46.46	868.04	03/24/87	59.48	855.02
02/12/65	35.54	878.96	12/01/70	39.49	875.01	05/22/80	46.23	868.27	04/24/87	59.85	854.65
03/15/65	35.62	878.88				06/20/80	45.99	868.51	04/25/87	60.25	854.25
04/13/65	35.38	879.12	01/13/71	39.62	874.88	07/16/80	46.86	867.64	05/13/87	59.62	854.88
05/10/65	35.53	878.97	02/11/71	39.42	875.08	08/13/80	46.48	868.02	05/30/87	60.80	853.70
06/11/65	35.54	878.96	03/09/71	39.88	874.62	09/09/80	46.45	868.05	06/27/87	60.37	854.13
07/13/65	35.71	878.79	04/03/71	39.59	874.91	10/08/80	46.17	868.33	07/16/87	60.39	854.11
08/03/65	35.85	878.65	04/29/71	39.60	874.90	11/18/80	46.14	868.36	07/31/87	61.35	853.15
09/14/65	35.90	878.60	06/07/71	39.86	874.64				08/01/87	60.95	853.55
10/21/65	35.97	878.53	07/09/71	39.91	874.59	02/23/81	45.98	868.52	08/03/87	60.61	853.89
11/16/65	36.01	878.49	08/04/71	40.22	874.28	04/27/81	46.31	868.19	08/29/87	70.26	844.24
12/14/65	35.87	878.63	08/31/71	39.64	874.86	06/09/81	46.67	867.83	09/26/87	62.37	852.13
			10/05/71	40.13	874.37	07/22/81	46.62	867.88	10/30/87	62.93	851.57
01/11/66	35.93	878.57	11/02/71	39.60	874.90	09/02/81	46.62	867.88	10/31/87	62.53	851.97
02/08/66	35.51	878.99	11/30/71	39.85	874.65	09/08/81	47.12	867.38	11/28/87	62.51	851.99
03/14/66	35.74	878.76				10/08/81	46.69	867.81	11/29/87	62.91	851.59
04/14/66	36.05	878.45	01/05/72	39.76	874.74	12/03/81	46.56	867.94	12/19/87	62.35	852.15
05/10/66	36.09	878.41	02/09/72	39.82	874.68				12/21/87	62.02	852.48
06/14/66	36.28	878.22	03/09/72	39.86	874.64	05/20/82	46.72	867.78			
07/13/66	36.47	878.03	04/13/72	39.80	874.70	06/30/82	47.64	866.86	04/02/88	61.96	852.54
07/21/66	36.57	877.93	05/03/72	40.06	874.44	08/24/82	48.47	866.03	04/30/88	62.18	852.32
08/17/66	36.49	878.01	06/06/72	40.14	874.36	08/25/82	48.62	865.88	05/27/88	62.49	852.01
09/28/66	36.63	877.87	07/06/72	40.76	873.74	10/30/82	47.39	867.11	05/28/88	62.89	851.61
10/25/66	36.68	877.82	08/09/72	40.63	873.87	11/18/82	47.72	866.78	06/15/88	62.74	851.76
12/02/66	36.76	877.74	09/06/72	40.56	873.94	11/21/82	47.39	867.11	06/24/88	62.87	851.63
12/29/66	36.64	877.86	10/04/72	40.77	873.73				06/25/88	63.27	851.23
			11/03/72	40.67	873.83	03/17/83	47.37	867.13	07/12/88	63.02	851.48
01/27/67	36.40	878.10	12/07/72	40.79	873.71	04/18/83	47.57	866.93	07/22/88	63.13	851.37
03/03/67	36.68	877.82				05/20/83	47.88	866.62	07/23/88	63.53	850.97
03/22/67	36.71	877.79	03/01/73	40.61	873.89	06/22/83	48.23	866.27	08/20/88	63.32	851.18
04/28/67	36.57	877.93	04/03/73	40.62	873.88	07/29/83	48.73	865.77	08/22/88	63.72	850.78
05/25/67	36.67	877.83	05/01/73	40.65	873.85	08/18/83	49.32	865.18	09/15/88	63.50	851.00
06/22/67	36.79	877.71	06/11/73	41.15	873.35	09/15/83	49.77	864.73	10/15/88	75.40	839.10
07/11/67	37.08	877.42	07/11/73	41.86	872.64	10/12/83	50.19	864.31	11/06/88	75.03	839.47
08/17/67	37.60	876.90	08/08/73	41.92	872.58	11/09/83	50.68	863.82	11/23/88	71.39	843.11
10/12/67	37.72	876.78	08/28/73	41.88	872.62	12/15/83	50.96	863.54	11/30/88	71.27	843.23
11/08/67	37.79	876.71	10/04/73	41.42	873.08				12/11/88	71.15	843.35
12/06/67	37.75	876.75	11/06/73	41.27	873.23	04/11/84	52.40	862.10			
			12/05/73	41.18	873.32	05/16/84	53.32	861.18	12/01/89	70.09	844.41
01/23/68	37.85	876.65				06/22/84	53.95	860.55			
02/27/68	37.92	876.58	01/10/74	41.55	872.95	07/12/84	54.89	859.61	01/03/90	69.15	845.35
04/02/68	37.99	876.51	02/12/74	40.67	873.83	08/09/84	56.31	858.19	01/23/90	69.74	844.76
05/01/68	38.03	876.47	03/14/74	41.30	873.20	09/12/84	56.42	858.08	05/05/90	68.97	845.53
05/27/68	38.10	876.40	04/02/74	41.42	873.08	10/10/84	56.57	857.93	05/28/90	68.92	845.58
06/25/68	38.24	876.26	06/06/74	41.57	872.93	11/07/84	56.09	858.41	06/30/90	68.84	845.66
07/23/68	38.44	876.06	09/10/74	42.24	872.26	12/05/84	56.48	858.02	08/04/90	68.78	845.72
08/21/68	38.69	875.81	12/03/74	41.20	873.30				09/02/90	68.70	845.80
09/18/68	38.79	875.71				04/10/85	56.65	857.85	09/29/90	68.68	845.82
10/15/68	38.67	875.83	03/19/75	40.80	873.70	05/05/85	56.98	857.52	10/09/90	68.70	845.80
11/13/68	38.64	875.86	09/16/75	41.90	872.60	06/08/85	57.03	857.47	10/27/90	68.70	845.80
12/10/68	38.70	875.80	12/04/75	41.53	872.97	07/08/85	57.49	857.01	11/09/90	69.13	845.37
						08/17/85	58.34	856.16	11/17/90	68.73	845.77
01/09/69	38.60	875.90	03/11/76	40.83	873.67	09/22/85	58.68	855.82	12/08/90	69.65	844.85
02/13/69	38.33	876.17	06/02/76	41.61	872.89	10/26/85	58.28	856.22			
03/04/69	38.36	876.14	09/10/76	43.42	871.08	12/07/85	58.57	855.93	05/10/91	69.52	844.98
06/02/69	38.44	876.06	11/30/76	43.00	871.50				06/01/91	68.41	846.09
06/24/69	38.38	876.12				05/10/86	58.47	856.03	07/13/91	68.70	845.80
07/15/69	38.33	876.17	03/09/77	42.27	872.23	06/07/86	58.69	855.81	08/10/91	68.65	845.85
08/21/69	38.85	875.65	06/13/77	43.08	871.42	07/04/86	59.03	855.47	11/20/91	101.38	813.12
09/16/69	38.90	875.60	09/19/77	43.41	871.09	07/16/86	58.76	855.74			
10/15/69	39.04	875.46	12/01/77	42.85	871.65	08/01/86	59.19	855.31	11/16/92	222.45	692.05
11/14/69	38.84	875.66				08/02/86	59.19	855.31			
12/04/69	39.27	875.23	03/14/78	42.90	871.60	08/30/86	59.40	855.10	06/14/93	221.81	692.69
			06/19/78	43.85	870.65	10/10/86	59.54	854.96	11/08/93	73.98	840.52
01/06/70	38.85	875.65	09/20/78	46.17	868.33	11/01/86	59.65	854.85			
02/06/70	39.01	875.49	11/20/78	45.36	869.14	11/30/86	59.65	854.85	11/15/94	75.20	839.30
03/06/70	38.98	875.52				12/06/86	59.74	854.76			

138-049-31DDD MP Elev (msl,ft)=915.2

Horace Aquifer Sl (ft.)=270-275

Date	Depth to Water (ft)	WL Elev (msl, ft)	Date	Depth to Water (ft)	WL Elev (msl, ft)	Date	Depth to Water (ft)	WL Elev (msl, ft)	Date	Depth to Water (ft)	WL Elev (msl, ft)

10/27/82	47.44	867.76	08/02/86	58.19	857.01	04/22/89	62.80	852.40	09/24/92	66.30	848.90
11/18/82	47.31	867.89	08/30/86	58.45	856.75	05/13/89	63.25	851.95	10/17/92	66.53	848.67
			10/10/86	58.43	856.77	06/03/89	63.17	852.03	11/11/92	66.38	848.82
04/18/83	47.20	868.00	11/01/86	58.64	856.56	07/01/89	63.48	851.72	12/06/92	66.37	848.83
05/20/83	47.47	867.73	12/01/86	58.44	856.76	07/30/89	64.48	850.72			
05/26/83	47.47	867.73	12/06/86	58.74	856.46	09/09/89	64.18	851.02	05/02/93	66.31	848.89
06/22/83	47.83	867.37				09/30/89	63.94	851.26	06/05/93	66.62	848.58
07/29/83	48.24	866.96	01/07/87	58.52	856.68	10/28/89	63.96	851.24	08/05/93	66.44	848.76
08/18/83	48.76	866.44	01/14/87	58.50	856.70	11/19/89	63.90	851.30	08/28/93	66.85	848.35
09/15/83	49.20	866.00	01/28/87	58.49	856.71				09/25/93	67.29	847.91
10/12/83	49.56	865.64	03/03/87	58.35	856.85	05/05/90	63.04	852.16	10/18/93	67.28	847.92
11/09/83	50.01	865.19	03/24/87	58.19	857.01	05/28/90	63.10	852.10	11/12/93	67.36	847.84
12/15/83	50.38	864.82	04/24/87	58.64	856.56	06/30/90	63.20	852.00			
			05/13/87	59.09	856.11	08/03/90	64.22	850.98	04/16/94	67.43	847.77
04/11/84	51.55	863.65	05/30/87	59.10	856.10	09/02/90	64.35	850.85	05/15/94	67.67	847.53
05/16/84	52.38	862.82	06/27/87	59.83	855.37	09/29/90	64.48	850.72	06/11/94	67.90	847.30
06/22/84	52.96	862.24	08/01/87	60.48	854.72	10/27/90	64.43	850.77	07/24/94	68.18	847.02
07/12/84	53.72	861.48	08/03/87	60.27	854.93	11/17/90	64.40	850.80	08/20/94	68.39	846.81
08/09/84	55.05	860.15	08/29/87	60.66	854.54	12/08/90	64.43	850.77	09/24/94	69.26	845.94
09/12/84	55.32	859.88	09/26/87	60.88	854.32				10/28/94	68.91	846.29
10/10/84	55.44	859.76	10/31/87	61.18	854.02	03/29/91	64.10	851.10	11/26/94	69.08	846.12
11/07/84	54.99	860.21	11/28/87	61.08	854.12	05/10/91	64.02	851.18			
12/05/84	55.33	859.87	12/19/87	60.94	854.26	06/01/91	64.30	850.90	04/30/95	69.20	846.00
						07/13/91	64.49	850.71	05/28/95	69.41	845.79
04/10/85	55.66	859.54	04/02/88	60.98	854.22	08/10/91	65.03	850.17	07/01/95	70.51	844.69
05/05/85	55.99	859.21	04/30/88	61.35	853.85	08/31/91	65.34	849.86	08/05/95	70.12	845.08
06/08/85	55.93	859.27	05/27/88	61.69	853.51	09/28/91	65.24	849.96	09/09/95	70.45	844.75
07/08/85	56.70	858.50	06/24/88	62.49	852.71	10/20/91	65.22	849.98	10/27/95	69.67	845.53
08/17/85	57.36	857.84	07/22/88	62.89	852.31	11/17/91	65.25	849.95	11/21/95	69.72	845.48
09/22/85	57.30	857.90	08/20/88	63.27	851.93	12/20/91	65.38	849.82			
10/26/85	57.14	858.06	09/15/88	63.83	851.37				06/04/96	69.22	845.98
12/07/85	57.10	858.10	09/17/88	63.82	851.38	04/17/92	65.71	849.49	06/30/96	69.72	845.48
			10/15/88	63.33	851.87	05/20/92	66.16	849.04	07/28/96	70.60	844.60
05/10/86	57.23	857.97	11/05/88	63.25	851.95	06/13/92	66.81	848.39	08/24/96	70.39	844.81
06/08/86	57.85	857.35	12/11/88	63.15	852.05	07/26/92	66.26	848.94	10/05/96	70.01	845.19
07/05/86	58.12	857.08				08/27/92	66.53	848.67	11/02/96	69.91	845.29

138-049-33CCC MP Elev (msl,ft)=913.21

Undefined Aquifer Sl (ft.)=157-162

Date	Depth to Water (ft)	WL Elev (msl, ft)	Date	Depth to Water (ft)	WL Elev (msl, ft)	Date	Depth to Water (ft)	WL Elev (msl, ft)	Date	Depth to Water (ft)	WL Elev (msl, ft)
12/20/91	49.70	863.51				06/11/94	40.35	872.86	09/09/95	41.33	871.88
			05/01/93	39.66	873.55	07/24/94	40.44	872.77	10/27/95	44.46	868.75
04/17/92	40.22	872.99	06/05/93	43.48	869.73	08/20/94	40.46	872.75	11/21/95	41.75	871.46
05/20/92	40.02	873.19	08/05/93	40.32	872.89	09/24/94	40.53	872.68			
06/13/92	39.91	873.30	08/29/93	40.24	872.97	10/28/94	40.32	872.89	06/04/96	40.33	872.88
07/26/92	39.73	873.48	09/25/93	40.14	873.07	11/26/94	40.47	872.74	06/30/96	40.38	872.83
08/27/92	39.65	873.56	10/18/93	40.20	873.01				07/28/96	40.65	872.56
09/24/92	39.47	873.74	11/12/93	40.17	873.04	04/30/95	39.99	873.22	08/24/96	40.78	872.43
10/17/92	39.55	873.66				05/28/95	40.14	873.07	10/05/96	40.79	872.42
11/11/92	39.45	873.76	04/16/94	40.22	872.99	07/01/95	40.32	872.89	11/02/96	40.82	872.39
12/06/92	39.46	873.75	05/15/94	39.56	873.65	08/05/95	40.65	872.56			

138-049-34CCC MP Elev (msl,ft)=911.98

Undefined Aquifer Sl (ft.)=81-101

Date	Depth to Water (ft)	WL Elev (msl, ft)	Date	Depth to Water (ft)	WL Elev (msl, ft)	Date	Depth to Water (ft)	WL Elev (msl, ft)	Date	Depth to Water (ft)	WL Elev (msl, ft)
06/30/64	27.02	884.96	09/03/64	25.55	886.43	11/03/64	25.50	886.48			
08/01/64	26.86	885.12	10/01/64	25.43	886.55	12/09/64	25.47	886.51			

138-049-35BBB MP Elev (msl,ft)=908.96

West Fargo South Aquifer Sl (ft.)=170-180

Date	Depth to Water (ft)	WL Elev (msl, ft)	Date	Depth to Water (ft)	WL Elev (msl, ft)	Date	Depth to Water (ft)	WL Elev (msl, ft)	Date	Depth to Water (ft)	WL Elev (msl, ft)
12/20/91	87.84	821.12				06/11/94	92.07	816.89	09/09/95	94.10	814.86
			05/01/93	86.92	822.04	07/24/94	92.63	816.33	10/27/95	92.83	816.13
04/17/92	87.44	821.52	06/05/93	88.93	820.03	08/20/94	93.05	815.91	11/21/95	92.47	816.49
05/20/92	88.16	820.80	08/05/93	89.82	819.14	09/24/94	93.19	815.77			
06/13/92	88.70	820.26	08/28/93	90.38	818.58	10/28/94	93.13	815.83	06/04/96	89.13	819.83
07/26/92	88.94	820.02	09/25/93	90.92	818.04	11/26/94	93.55	815.41	06/30/96	90.14	818.82
08/27/92	89.30	819.66	10/18/93	91.25	817.71				07/28/96	91.82	817.14
09/24/92	89.15	819.81	11/12/93	91.25	817.71	04/30/95	92.21	816.75	08/24/96	92.74	816.22
10/17/92	89.42	819.54				05/28/95	92.34	816.62	10/05/96	93.43	815.53
11/11/92	89.15	819.81	04/16/94	92.89	816.07	07/01/95	93.94	815.02	11/02/96	93.84	815.12
12/06/92	88.79	820.17	05/15/94	91.03	817.93	08/05/95	93.80	815.16			

138-050-14DDD MP Elev (msl,ft)=912.34

Undefined Aquifer Sl (ft.)=155-158

Date	Depth to Water (ft)	WL Elev (msl, ft)
09/08/81	39.05	873.29
08/25/82	39.80	872.54
11/18/82	39.54	872.80
04/18/83	39.54	872.80
05/26/83	40.03	872.31
06/22/83	39.72	872.62
07/28/83	39.97	872.37
08/18/83	40.10	872.24
09/15/83	40.36	871.98
10/12/83	40.58	871.76
11/09/83	40.86	871.48
12/15/83	41.04	871.30
04/11/84	41.76	870.58
05/16/84	42.15	870.19
06/22/84	42.53	869.81
07/12/84	42.92	869.42
08/09/84	43.51	868.83
09/12/84	44.04	868.30
10/10/84	44.40	867.94
11/07/84	44.23	868.11
12/05/84	44.58	867.76
04/10/85	45.04	867.30
05/05/85	45.17	867.17
06/08/85	45.17	867.17
07/08/85	45.51	866.83
08/17/85	46.06	866.28
09/22/85	46.10	866.24
10/26/85	46.20	866.14
12/07/85	46.15	866.19
05/10/86	45.28	867.06
06/08/86	46.52	865.82
07/05/86	46.69	865.65
08/01/86	46.70	865.64
08/30/86	46.93	865.41
10/10/86	46.92	865.42
11/01/86	47.21	865.13
12/06/86	47.25	865.09
04/24/87	47.34	865.00
05/30/87	47.41	864.93
08/01/87	48.05	864.29
08/29/87	48.31	864.03
09/26/87	48.48	863.86
10/31/87	48.77	863.57
11/28/87	48.82	863.52
12/19/87	48.75	863.59
04/02/88	48.73	863.61
04/30/88	49.04	863.30
05/27/88	49.13	863.21
06/24/88	49.38	862.96
07/22/88	49.79	862.55
08/20/88	50.03	862.31
09/14/88	50.29	862.05
09/17/88	50.21	862.13
10/15/88	50.33	862.01
11/06/88	50.37	861.97
12/11/88	50.51	861.83
04/22/89	50.22	862.12
05/13/89	50.33	862.01
06/03/89	50.42	861.92
07/01/89	50.57	861.77
07/30/89	50.90	861.44
09/09/89	51.98	860.36
09/30/89	51.94	860.40
10/28/89	51.10	861.24
11/19/89	52.03	860.31
05/05/90	50.65	861.69
05/28/90	50.63	861.71
06/30/90	50.58	861.76
08/04/90	50.99	861.35
09/02/90	51.12	861.22
09/29/90	51.27	861.07
10/27/90	51.29	861.05
11/17/90	51.36	860.98
12/08/90	51.37	860.97
03/29/91	51.35	860.99
05/11/91	51.29	861.05
06/01/91	51.28	861.06
07/13/91	51.50	860.84
08/10/91	51.66	860.68
08/31/91	51.75	860.59
09/28/91	51.79	860.55
10/20/91	51.88	860.46
11/17/91	51.83	860.51
12/20/91	52.03	860.31
04/17/92	52.26	860.08
05/20/92	52.39	859.95
06/13/92	52.55	859.79
07/26/92	52.61	859.73
08/27/92	52.65	859.69
09/24/92	52.55	859.79
10/17/92	52.80	859.54
12/06/92	52.69	859.65
05/02/93	52.72	859.62
06/05/93	52.75	859.59
08/05/93	52.72	859.62
08/29/93	52.83	859.51
09/25/93	52.97	859.37
10/18/93	53.01	859.33
11/12/93	53.05	859.29
04/16/94	53.42	858.92
05/15/94	53.48	858.86
06/11/94	53.65	858.69
07/24/94	53.78	858.56
08/20/94	53.93	858.41
04/30/95	56.08	856.26
05/28/95	56.07	856.27
07/01/95	56.38	855.96
08/05/95	56.38	855.96
09/09/95	56.59	855.75
10/27/95	56.27	856.07
11/21/95	56.39	855.95
06/04/96	56.04	856.30
06/30/96	56.16	856.18
07/28/96	56.40	855.94
08/25/96	56.49	855.85
10/05/96	56.50	855.84
11/02/96	56.45	855.89

139-048-05DCC
West Moorhead Aquifer

MP Elev (msl,ft)=901
SI (ft.)=190-220

Date	Depth to Water (ft)	WL Elev (msl, ft)
8/27/82	184.60	716.40

139-048-07ACB1 MP Elev (msl,ft)=903.16

Fargo Aquifer SI (ft.)=0-228

Date	Depth to Water (ft)	WL Elev (msl, ft)
07/03/40	39.48	863.68
07/08/40	39.69	863.47
07/09/40	39.82	863.34
07/10/40	39.90	863.26
07/11/40	39.87	863.29
07/12/40	39.95	863.21
07/13/40	39.90	863.26
07/15/40	39.92	863.24
07/16/40	39.93	863.23
07/17/40	39.86	863.30
07/18/40	39.80	863.36
07/20/40	39.94	863.22
07/22/40	40.06	863.10
07/24/40	40.18	862.98
07/26/40	40.34	862.82
07/29/40	40.41	862.75
07/31/40	40.45	862.71
08/03/40	40.51	862.65
08/04/40	40.54	862.62
08/05/40	40.55	862.61
08/06/40	40.55	862.61
08/07/40	40.52	862.64
08/08/40	40.56	862.60
08/09/40	40.59	862.57
08/10/40	40.68	862.48
08/11/40	40.71	862.45
08/12/40	40.75	862.41
08/13/40	40.78	862.38
08/14/40	40.81	862.35
08/17/40	40.83	862.33
08/18/40	40.83	862.33
08/19/40	40.82	862.34
08/20/40	40.77	862.39
08/21/40	40.74	862.42
08/22/40	40.75	862.41
08/23/40	40.69	862.47
08/24/40	40.69	862.47
08/25/40	40.61	862.55
08/26/40	40.58	862.58
08/27/40	40.56	862.60
08/28/40	40.54	862.62
08/29/40	40.50	862.66
08/30/40	40.49	862.67
08/31/40	40.50	862.66
09/01/40	40.48	862.68
09/02/40	40.46	862.70
09/03/40	40.49	862.67
09/04/40	40.50	862.66
09/05/40	40.51	862.65
09/06/40	40.52	862.64
09/07/40	40.57	862.59
09/08/40	40.58	862.58
09/09/40	40.57	862.59
09/10/40	40.58	862.58
09/11/40	40.57	862.59
09/12/40	40.56	862.60
09/13/40	40.54	862.62
09/14/40	40.56	862.60
09/15/40	40.55	862.61
09/16/40	40.53	862.63
09/17/40	40.50	862.66
09/18/40	40.50	862.66
09/19/40	40.54	862.62
09/20/40	40.59	862.57
09/21/40	40.61	862.55
09/22/40	40.61	862.55
09/23/40	40.59	862.57
09/24/40	40.65	862.51
09/25/40	40.66	862.50
09/26/40	40.63	862.53
09/27/40	40.58	862.58
09/28/40	40.60	862.56
09/29/40	40.62	862.54
09/30/40	40.61	862.55
10/01/40	40.58	862.58
10/02/40	40.56	862.60
10/03/40	40.53	862.63
10/04/40	40.48	862.68
10/05/40	40.49	862.67
10/06/40	40.51	862.65
10/07/40	40.51	862.65
10/08/40	40.50	862.66
10/09/40	40.48	862.68
10/10/40	40.48	862.68
10/11/40	40.47	862.69
10/12/40	40.46	862.70
10/13/40	40.46	862.70
10/14/40	40.45	862.71
10/15/40	40.45	862.71
10/16/40	40.43	862.73
10/17/40	40.45	862.71
10/18/40	40.44	862.72
10/19/40	40.40	862.76
10/20/40	40.39	862.77
10/21/40	40.40	862.76
10/22/40	40.38	862.78
10/23/40	40.39	862.77
10/24/40	40.38	862.78
10/25/40	40.37	862.79
10/26/40	40.38	862.78
10/27/40	40.37	862.79
10/28/40	40.34	862.82
10/29/40	40.33	862.83
10/30/40	40.33	862.83
10/31/40	40.33	862.83
11/01/40	40.30	862.86
11/02/40	40.30	862.86
11/03/40	40.30	862.86
11/04/40	40.29	862.87
11/05/40	40.32	862.84
11/06/40	40.33	862.83
11/07/40	40.33	862.83
11/08/40	40.32	862.84
11/09/40	40.30	862.86
11/10/40	40.28	862.88
11/11/40	40.27	862.89
11/12/40	40.32	862.84
11/13/40	40.35	862.81
11/14/40	40.35	862.81
11/15/40	40.32	862.84
11/16/40	40.23	862.93
11/17/40	40.23	862.93
11/18/40	40.24	862.92
11/19/40	40.26	862.90
11/20/40	40.27	862.89
11/21/40	40.24	862.92
11/22/40	40.29	862.87
11/23/40	40.29	862.87
11/24/40	40.30	862.86
11/25/40	40.29	862.87
11/26/40	40.26	862.90
11/27/40	40.27	862.89
11/28/40	40.26	862.90
11/29/40	40.22	862.94
11/30/40	40.23	862.93
12/01/40	40.24	862.92
12/02/40	40.26	862.90
12/03/40	40.26	862.90
12/04/40	40.20	862.96
12/05/40	40.21	862.95
12/06/40	40.17	862.99
12/07/40	40.18	862.98
12/08/40	40.17	862.99
12/09/40	40.18	862.98
12/10/40	40.20	862.96
12/11/40	40.23	862.93
12/12/40	40.28	862.88
12/14/40	40.28	862.88
12/15/40	40.27	862.89
12/16/40	40.27	862.89
12/17/40	40.27	862.89
12/18/40	40.25	862.91
12/19/40	40.21	862.95
12/20/40	40.23	862.93
12/21/40	40.22	862.94
12/22/40	40.22	862.94
12/23/40	40.20	862.96
12/24/40	40.16	863.00
12/25/40	40.18	862.98
12/26/40	40.20	862.96
12/27/40	40.20	862.96
12/28/40	40.26	862.90
12/29/40	40.15	863.01
12/30/40	40.17	862.99
12/31/40	40.17	862.99
01/01/41	40.18	862.98
01/02/41	40.13	863.03
01/03/41	40.13	863.03
01/04/41	40.15	863.01
01/05/41	40.17	862.99
01/06/41	40.17	862.99
01/07/41	40.16	863.00
01/08/41	40.20	862.96
01/09/41	40.20	862.96
01/10/41	40.16	863.00
01/11/41	40.16	863.00
01/12/41	40.17	862.99
01/13/41	40.17	862.99
01/14/41	40.16	863.00
01/15/41	40.12	863.04
01/16/41	40.11	863.05
01/17/41	40.16	863.00
01/18/41	40.17	862.99
01/19/41	40.14	863.02
01/20/41	40.14	863.02
01/21/41	40.14	863.02
01/22/41	40.16	863.00
01/23/41	40.16	863.00
01/24/41	40.16	863.00
01/25/41	40.16	863.00
01/26/41	40.15	863.01
01/27/41	40.17	862.99
01/28/41	40.15	863.01
01/29/41	40.13	863.03
01/30/41	40.10	863.06
01/31/41	40.10	863.06
02/01/41	40.18	862.98
02/02/41	40.14	863.02
02/03/41	40.14	863.02
02/04/41	40.11	863.05
02/05/41	40.09	863.07
02/06/41	40.10	863.06
02/07/41	40.10	863.06
02/08/41	40.10	863.06
02/09/41	40.08	863.08
02/10/41	40.08	863.08
02/11/41	40.08	863.08
02/12/41	40.04	863.12
02/13/41	40.07	863.09
02/14/41	40.07	863.09
02/15/41	40.19	862.97
02/16/41	40.07	863.09
02/17/41	40.11	863.05
02/18/41	40.14	863.02
02/19/41	40.16	863.00
02/20/41	40.16	863.00
02/21/41	40.15	863.01
02/22/41	40.14	863.02
02/23/41	40.13	863.03
02/24/41	40.12	863.04
02/25/41	40.12	863.04
02/26/41	40.12	863.04
02/27/41	40.12	863.04
02/28/41	40.12	863.04
03/01/41	40.07	863.09
03/02/41	40.05	863.11
03/03/41	40.10	863.06
03/04/41	40.11	863.05
03/05/41	40.11	863.05
03/06/41	40.11	863.05
03/07/41	40.13	863.03
03/08/41	40.11	863.05
03/09/41	40.09	863.07
03/10/41	40.10	863.06
03/11/41	40.13	863.03
03/12/41	40.17	862.99
03/13/41	40.18	862.98
03/14/41	40.14	863.02
03/15/41	40.06	863.10
03/16/41	40.11	863.05
03/17/41	40.14	863.02
03/18/41	40.12	863.04
03/19/41	40.09	863.07
03/20/41	40.14	863.02
03/21/41	40.15	863.01
03/22/41	40.14	863.02
03/23/41	40.14	863.02
03/24/41	40.14	863.02
03/25/41	40.13	863.03
03/26/41	40.10	863.06
03/27/41	40.12	863.04
03/28/41	40.13	863.03
03/29/41	40.10	863.06
03/30/41	40.03	863.13
03/31/41	40.05	863.11
04/01/41	40.03	863.13
04/02/41	40.04	863.12
04/03/41	40.04	863.12
04/04/41	40.05	863.11
04/05/41	40.04	863.12
04/06/41	40.03	863.13
04/07/41	40.03	863.13
04/08/41	40.01	863.15
04/09/41	40.02	863.14
04/10/41	40.03	863.13
04/11/41	40.02	863.14
04/12/41	40.00	863.16
04/13/41	39.97	863.19
04/14/41	39.95	863.21
04/15/41	39.99	863.17
04/16/41	39.98	863.18
04/17/41	39.97	863.19
04/18/41	39.96	863.20
04/19/41	39.98	863.18
04/20/41	39.98	863.18
04/21/41	40.00	863.16
04/22/41	40.01	863.15
04/23/41	40.01	863.15
04/24/41	40.03	863.13
04/25/41	40.04	863.12
04/26/41	40.03	863.13
04/27/41	40.01	863.15
04/28/41	40.01	863.15
04/29/41	40.01	863.15
04/30/41	40.00	863.16
05/01/41	40.00	863.16
05/02/41	40.00	863.16
05/03/41	39.99	863.17
05/04/41	39.98	863.18
05/05/41	39.98	863.18
05/06/41	39.96	863.20
05/07/41	39.99	863.17
05/08/41	40.04	863.12
05/09/41	40.07	863.09
05/10/41	40.07	863.09
05/11/41	40.08	863.08
05/12/41	40.06	863.10
05/13/41	40.02	863.14
05/14/41	40.00	863.16
05/15/41	40.04	863.12
05/16/41	40.06	863.10
05/17/41	40.06	863.10
05/18/41	40.04	863.12
05/19/41	40.07	863.09
05/20/41	40.11	863.05
05/21/41	40.12	863.04
05/22/41	40.17	862.99
05/23/41	40.18	862.98
05/24/41	40.17	862.99
05/25/41	40.14	863.02
05/26/41	40.10	863.06
05/27/41	40.10	863.06
05/28/41	40.11	863.05
05/29/41	40.15	863.01
05/30/41	40.14	863.02
05/31/41	40.12	863.04
06/01/41	40.12	863.04
06/02/41	40.14	863.02
06/03/41	40.14	863.02

139-048-07ACB1 **(Continued)** MP Elev (msl,ft)=903.16

Fargo Aquifer SI (ft.)=0-228

Date	Depth to Water (ft)	WL Elev (msl, ft)	Date	Depth to Water (ft)	WL Elev (msl, ft)	Date	Depth to Water (ft)	WL Elev (msl, ft)	Date	Depth to Water (ft)	WL Elev (msl, ft)
06/04/41	40.15	863.01	08/23/41	41.47	861.69	11/11/41	41.26	861.90	02/05/42	41.04	862.12
06/05/41	40.14	863.02	08/24/41	41.46	861.70	11/12/41	41.21	861.95	02/06/42	41.08	862.08
06/06/41	40.11	863.05	08/25/41	41.49	861.67	11/13/41	41.23	861.93	02/07/42	41.10	862.06
06/07/41	39.94	863.22	08/26/41	41.56	861.60	11/14/41	41.23	861.93	02/08/42	41.10	862.06
06/08/41	39.98	863.18	08/27/41	41.58	861.58	11/15/41	41.19	861.97	02/09/42	41.10	862.06
06/09/41	39.99	863.17	08/28/41	41.58	861.58	11/16/41	41.19	861.97	02/10/42	41.10	862.06
06/10/41	39.97	863.19	08/29/41	41.54	861.62	11/17/41	41.16	862.00	02/11/42	41.10	862.06
06/11/41	39.92	863.24	08/30/41	41.53	861.63	11/18/41	41.15	862.01	02/12/42	41.10	862.06
06/12/41	39.84	863.32	08/31/41	41.53	861.63	11/19/41	41.15	862.01	02/13/42	41.10	862.06
06/13/41	39.87	863.29	09/01/41	41.54	861.62	11/20/41	41.18	861.98	02/14/42	41.08	862.08
06/14/41	39.91	863.25	09/02/41	41.54	861.62	11/21/41	41.18	861.98	02/15/42	41.07	862.09
06/15/41	39.93	863.23	09/03/41	41.55	861.61	11/22/41	41.20	861.96	02/16/42	41.05	862.11
06/16/41	39.95	863.21	09/04/41	41.53	861.63	11/23/41	41.20	861.96	02/21/42	41.10	862.06
06/17/41	39.94	863.22	09/05/41	41.52	861.64	11/24/41	41.20	861.96	02/22/42	41.10	862.06
06/18/41	39.95	863.21	09/06/41	41.56	861.60	11/25/41	41.16	862.00	02/23/42	41.10	862.06
06/19/41	39.97	863.19	09/07/41	41.56	861.60	11/26/41	41.17	861.99	02/24/42	41.10	862.06
06/20/41	40.04	863.12	09/08/41	41.52	861.64	11/27/41	41.19	861.97	02/25/42	41.09	862.07
06/21/41	40.12	863.04	09/09/41	41.51	861.65	11/28/41	41.19	861.97	02/26/42	41.09	862.07
06/22/41	40.16	863.00	09/10/41	41.54	861.62	11/29/41	41.21	861.95	02/27/42	41.10	862.06
06/23/41	40.17	862.99	09/11/41	41.54	861.62	11/30/41	41.21	861.95	02/28/42	41.10	862.06
06/24/41	40.17	862.99	09/12/41	41.48	861.68	12/01/41	41.18	861.98	03/01/42	41.10	862.06
06/25/41	40.18	862.98	09/13/41	41.39	861.77	12/02/41	41.18	861.98	03/02/42	41.06	862.10
06/26/41	40.22	862.94	09/14/41	41.40	861.76	12/03/41	41.13	862.03	03/03/42	41.02	862.14
06/27/41	40.25	862.91	09/15/41	41.42	861.74	12/04/41	41.12	862.04	03/04/42	41.03	862.13
06/28/41	40.24	862.92	09/16/41	41.44	861.72	12/05/41	41.20	861.96	03/05/42	41.04	862.12
06/29/41	40.24	862.92	09/17/41	41.46	861.70	12/06/41	41.20	861.96	03/06/42	40.99	862.17
06/30/41	40.31	862.85	09/18/41	41.44	861.72	12/07/41	41.14	862.02	03/07/42	41.04	862.12
07/01/41	40.42	862.74	09/19/41	41.42	861.74	12/08/41	41.17	861.99	03/08/42	41.04	862.12
07/02/41	40.47	862.69	09/20/41	41.41	861.75	12/09/41	41.22	861.94	03/09/42	41.03	862.13
07/03/41	40.49	862.67	09/21/41	41.48	861.68	12/10/41	41.23	861.93	03/10/42	40.99	862.17
07/04/41	40.51	862.65	09/22/41	41.50	861.66	12/11/41	41.22	861.94	03/11/42	41.03	862.13
07/05/41	40.52	862.64	09/23/41	41.50	861.66	12/12/41	41.15	862.01	03/12/42	41.04	862.12
07/06/41	40.58	862.58	09/24/41	41.42	861.74	12/13/41	41.15	862.01	03/13/42	41.04	862.12
07/07/41	40.58	862.58	09/25/41	41.42	861.74	12/14/41	41.15	862.01	03/14/42	41.02	862.14
07/08/41	40.58	862.58	09/26/41	41.42	861.74	12/15/41	41.11	862.05	03/15/42	41.02	862.14
07/09/41	40.55	862.61	09/27/41	41.42	861.74	12/16/41	41.10	862.06	03/16/42	41.00	862.16
07/10/41	40.59	862.57	09/28/41	41.45	861.71	12/17/41	41.09	862.07	03/17/42	40.99	862.17
07/11/41	40.65	862.51	09/29/41	41.45	861.71	12/18/41	41.09	862.07	03/18/42	41.00	862.16
07/12/41	40.66	862.50	09/30/41	41.40	861.76	12/19/41	41.12	862.04	03/19/42	41.01	862.15
07/13/41	40.66	862.50	10/01/41	41.41	861.75	12/20/41	41.12	862.04	03/20/42	41.01	862.15
07/14/41	40.64	862.52	10/02/41	41.41	861.75	12/21/41	41.10	862.06	03/21/42	41.02	862.14
07/15/41	40.62	862.54	10/03/41	41.36	861.80	12/22/41	41.10	862.06	03/22/42	41.04	862.12
07/16/41	40.62	862.54	10/04/41	41.34	861.82	12/23/41	41.10	862.06	03/23/42	41.03	862.13
07/17/41	40.62	862.54	10/05/41	41.36	861.80	12/24/41	41.10	862.06	03/24/42	41.01	862.15
07/18/41	40.67	862.49	10/06/41	41.36	861.80	12/25/41	41.11	862.05	03/25/42	41.00	862.16
07/19/41	40.71	862.45	10/07/41	41.32	861.84	12/26/41	41.15	862.01	03/26/42	40.92	862.24
07/20/41	40.72	862.44	10/08/41	41.32	861.84	12/27/41	41.16	862.00	03/27/42	40.91	862.25
07/21/41	40.74	862.42	10/09/41	41.35	861.81	12/28/41	41.16	862.00	03/28/42	40.92	862.24
07/22/41	40.76	862.40	10/10/41	41.36	861.80	12/29/41	41.16	862.00	03/29/42	40.95	862.21
07/23/41	40.80	862.36	10/11/41	41.33	861.83	12/30/41	41.15	862.01	03/30/42	40.96	862.20
07/24/41	40.85	862.31	10/12/41	41.33	861.83	12/31/41	41.15	862.01	03/31/42	40.96	862.20
07/25/41	40.89	862.27	10/13/41	41.31	861.85				04/01/42	40.92	862.24
07/26/41	40.94	862.22	10/14/41	41.33	861.83	01/01/42	41.15	862.01	04/02/42	40.92	862.24
07/27/41	41.00	862.16	10/15/41	41.37	861.79	01/03/42	41.14	862.02	04/03/42	40.90	862.26
07/28/41	41.09	862.07	10/16/41	41.36	861.80	01/10/42	41.05	862.11	04/04/42	40.91	862.25
07/29/41	41.14	862.02	10/17/41	41.30	861.86	01/11/42	41.09	862.07	04/05/42	40.94	862.22
07/30/41	41.21	861.95	10/18/41	41.33	861.83	01/12/42	41.12	862.04	04/06/42	40.90	862.26
07/31/41	41.23	861.93	10/19/41	41.33	861.83	01/13/42	41.11	862.05	04/07/42	40.96	862.20
08/01/41	41.26	861.90	10/20/41	41.29	861.87	01/14/42	41.14	862.02	04/08/42	40.96	862.20
08/02/41	41.30	861.86	10/21/41	41.29	861.87	01/15/42	41.12	862.04	04/09/42	40.95	862.21
08/03/41	41.34	861.82	10/22/41	41.30	861.86	01/16/42	41.12	862.04	04/10/42	40.96	862.20
08/04/41	41.35	861.81	10/23/41	41.29	861.87	01/17/42	41.08	862.08	04/11/42	40.95	862.21
08/05/41	41.36	861.80	10/24/41	41.29	861.87	01/18/42	41.09	862.07	04/12/42	40.95	862.21
08/06/41	41.38	861.78	10/25/41	41.29	861.87	01/19/42	41.11	862.05	04/13/42	40.94	862.22
08/07/41	41.44	861.72	10/26/41	41.27	861.89	01/20/42	41.11	862.05	04/14/42	40.93	862.23
08/08/41	41.47	861.69	10/27/41	41.29	861.87	01/21/42	41.11	862.05	04/15/42	40.93	862.23
08/09/41	41.50	861.66	10/28/41	41.30	861.86	01/22/42	41.09	862.07	04/16/42	41.00	862.16
08/10/41	41.49	861.67	10/29/41	41.30	861.86	01/23/42	41.07	862.09	04/17/42	41.03	862.13
08/11/41	41.45	861.71	10/30/41	41.30	861.86	01/24/42	41.06	862.10	04/18/42	41.02	862.14
08/12/41	41.48	861.68	10/31/41	41.30	861.86	01/25/42	41.05	862.11	04/19/42	41.05	862.11
08/13/41	41.48	861.68	11/01/41	41.23	861.93	01/26/42	41.07	862.09	04/20/42	41.04	862.12
08/14/41	41.47	861.69	11/02/41	41.22	861.94	01/27/42	41.09	862.07	04/21/42	41.03	862.13
08/15/41	41.49	861.67	11/03/41	41.22	861.94	01/28/42	41.09	862.07	04/22/42	41.00	862.16
08/16/41	41.50	861.66	11/04/41	41.26	861.90	01/29/42	41.06	862.10	04/23/42	40.95	862.21
08/17/41	41.49	861.67	11/05/41	41.26	861.90	01/30/42	41.09	862.07	04/24/42	41.00	862.16
08/18/41	41.48	861.68	11/06/41	41.24	861.92	01/31/42	41.10	862.06	04/25/42	41.00	862.16
08/19/41	41.50	861.66	11/07/41	41.24	861.92	02/01/42	41.10	862.06	04/26/42	40.98	862.18
08/20/41	41.51	861.65	11/08/41	41.24	861.92	02/02/42	41.10	862.06	04/27/42	40.98	862.18
08/21/41	41.51	861.65	11/09/41	41.24	861.92	02/03/42	41.07	862.09	04/28/42	40.89	862.27
08/22/41	41.53	861.63	11/10/41	41.25	861.91	02/04/42	41.07	862.09	04/29/42	40.90	862.26

139-048-07ACB1 **(Continued)** **MP Elev (msl,ft)=903.16**

Fargo Aquifer **SI (ft.)=0-228**

Date	Depth to Water (ft)	WL Elev (msl, ft)
04/30/42	40.78	862.38
05/01/42	40.70	862.46
05/02/42	40.67	862.49
05/03/42	40.68	862.48
05/04/42	40.69	862.47
05/05/42	40.71	862.45
05/06/42	40.73	862.43
05/07/42	40.75	862.41
05/08/42	40.78	862.38
05/09/42	40.80	862.36
05/10/42	40.80	862.36
05/11/42	40.79	862.37
05/12/42	40.78	862.38
05/13/42	40.76	862.40
05/14/42	40.81	862.35
05/15/42	40.80	862.36
05/16/42	40.79	862.37
05/17/42	40.78	862.38
05/18/42	40.75	862.41
05/19/42	40.79	862.37
05/20/42	40.80	862.36
05/21/42	40.80	862.36
05/22/42	40.81	862.35
05/23/42	40.82	862.34
05/24/42	40.82	862.34
05/25/42	40.80	862.36
05/26/42	40.79	862.37
05/27/42	40.79	862.37
05/28/42	40.79	862.37
05/29/42	40.81	862.35
05/30/42	40.80	862.36
05/31/42	40.78	862.38
06/01/42	40.77	862.39
06/02/42	40.75	862.41
06/03/42	40.79	862.37
06/04/42	40.82	862.34
06/05/42	40.77	862.39
06/06/42	40.78	862.38
06/07/42	40.78	862.38
06/08/42	40.77	862.39
06/09/42	40.73	862.43
06/10/42	40.67	862.49
06/11/42	40.63	862.53
06/12/42	40.73	862.43
06/13/42	40.78	862.38
06/14/42	40.80	862.36
06/15/42	40.82	862.34
06/16/42	40.82	862.34
06/17/42	40.82	862.34
06/18/42	40.82	862.34
06/19/42	40.82	862.34
06/20/42	40.85	862.31
06/21/42	40.88	862.28
06/22/42	40.89	862.27
06/23/42	40.90	862.26
06/24/42	40.90	862.26
06/25/42	40.89	862.27
06/26/42	40.90	862.26
06/27/42	40.90	862.26
06/28/42	40.89	862.27
06/29/42	40.89	862.27
06/30/42	40.93	862.23
07/01/42	40.95	862.21
07/02/42	40.93	862.23
07/03/42	40.94	862.22
07/04/42	40.94	862.22
07/05/42	40.97	862.19
07/06/42	40.97	862.19
07/07/42	40.95	862.21
07/08/42	40.97	862.19
07/09/42	41.03	862.13
07/10/42	41.06	862.10
07/11/42	41.06	862.10
07/12/42	41.12	862.04
07/13/42	41.17	861.99
07/14/42	41.19	861.97
07/15/42	41.19	861.97
07/16/42	41.20	861.96
07/17/42	41.25	861.91
07/18/42	41.25	861.91
07/19/42	41.30	861.86
07/20/42	41.38	861.78
07/21/42	41.40	861.76
07/22/42	41.41	861.75
07/23/42	41.41	861.75
07/24/42	41.41	861.75
07/25/42	41.42	861.74
07/26/42	41.43	861.73
07/27/42	41.45	861.71
07/28/42	41.45	861.71
07/29/42	41.44	861.72
07/30/42	41.42	861.74
07/31/42	41.45	861.71
08/01/42	41.48	861.68
08/02/42	41.51	861.65
08/03/42	41.54	861.62
08/04/42	41.54	861.62
08/05/42	41.51	861.65
08/06/42	41.54	861.62
08/07/42	41.57	861.59
08/08/42	41.60	861.56
08/09/42	41.61	861.55
08/10/42	41.64	861.52
08/11/42	41.63	861.53
08/12/42	41.61	861.55
08/13/42	41.58	861.58
08/14/42	41.54	861.62
08/15/42	41.57	861.59
08/16/42	41.59	861.57
08/17/42	41.61	861.55
08/18/42	41.61	861.55
08/19/42	41.62	861.54
08/20/42	41.63	861.53
08/21/42	41.65	861.51
08/22/42	41.71	861.45
08/23/42	41.72	861.44
08/24/42	41.73	861.43
08/25/42	41.68	861.48
08/26/42	41.67	861.49
08/27/42	41.65	861.51
08/28/42	41.65	861.51
08/29/42	41.60	861.56
08/30/42	41.50	861.66
08/31/42	41.39	861.77
09/01/42	41.41	861.75
09/02/42	41.45	861.71
09/03/42	41.45	861.71
09/04/42	41.42	861.74
09/05/42	41.43	861.73
09/06/42	41.42	861.74
09/07/42	41.41	861.75
09/08/42	41.42	861.74
09/09/42	41.42	861.74
09/10/42	41.42	861.74
09/11/42	41.43	861.73
09/12/42	41.43	861.73
09/13/42	41.42	861.74
09/14/42	41.36	861.80
09/15/42	41.36	861.80
09/16/42	41.38	861.78
09/17/42	41.38	861.78
09/18/42	41.38	861.78
09/19/42	41.40	861.76
09/20/42	41.39	861.77
09/21/42	41.36	861.80
09/22/42	41.35	861.81
09/23/42	41.37	861.79
09/24/42	41.37	861.79
09/25/42	41.37	861.79
09/26/42	41.33	861.83
09/27/42	41.35	861.81
09/28/42	41.37	861.79
09/29/42	41.34	861.82
09/30/42	41.34	861.82
10/01/42	41.32	861.84
10/02/42	41.31	861.85
10/03/42	41.31	861.85
10/04/42	41.29	861.87
10/05/42	41.32	861.84
10/06/42	41.32	861.84
10/07/42	41.31	861.85
10/08/42	41.36	861.80
10/09/42	41.37	861.79
10/10/42	41.35	861.81
10/11/42	41.33	861.83
10/12/42	41.34	861.82
10/13/42	41.36	861.80
10/14/42	41.36	861.80
10/15/42	41.36	861.80
10/16/42	41.37	861.79
10/17/42	41.40	861.76
10/18/42	41.39	861.77
10/19/42	41.36	861.80
10/20/42	41.32	861.84
10/21/42	41.32	861.84
10/22/42	41.29	861.87
10/23/42	41.30	861.86
10/24/42	41.30	861.86
10/25/42	41.32	861.84
10/26/42	41.32	861.84
10/27/42	41.32	861.84
10/28/42	41.31	861.85
10/29/42	41.29	861.87
10/30/42	41.26	861.90
10/31/42	41.26	861.90
11/01/42	41.26	861.90
11/02/42	41.32	861.84
11/03/42	41.32	861.84
11/04/42	41.27	861.89
11/05/42	41.34	861.82
11/06/42	41.36	861.80
11/07/42	41.35	861.81
11/08/42	41.34	861.82
11/09/42	41.32	861.84
11/10/42	41.32	861.84
11/11/42	41.33	861.83
11/12/42	41.32	861.84
11/13/42	41.35	861.81
11/14/42	41.31	861.85
11/15/42	41.23	861.93
11/16/42	41.24	861.92
11/17/42	41.30	861.86
11/18/42	41.31	861.85
11/19/42	41.33	861.83
11/20/42	41.36	861.80
11/21/42	41.39	861.77
11/22/42	41.39	861.77
11/23/42	41.35	861.81
11/24/42	41.28	861.88
11/25/42	41.30	861.86
11/26/42	41.30	861.86
11/27/42	41.32	861.84
11/28/42	41.33	861.83
12/04/42	41.28	861.88
12/05/42	41.30	861.86
12/14/42	41.31	861.85
12/15/42	41.32	861.84
12/16/42	41.32	861.84
12/17/42	41.28	861.88
12/18/42	41.38	861.78
12/19/42	41.36	861.80
12/21/42	41.30	861.86
12/22/42	41.22	861.94
12/23/42	41.26	861.90
12/24/42	41.28	861.88
12/25/42	41.27	861.89
12/26/42	41.31	861.85
12/27/42	41.33	861.83
12/28/42	41.31	861.85
12/29/42	41.28	861.88
01/02/43	41.30	861.86
01/03/43	41.33	861.83
01/04/43	41.34	861.82
01/05/43	41.34	861.82
01/06/43	41.32	861.84
01/07/43	41.32	861.84
01/08/43	41.32	861.84
01/09/43	41.22	861.94
01/10/43	41.22	861.94
01/11/43	41.25	861.91
01/12/43	41.27	861.89
01/13/43	41.26	861.90
01/14/43	41.17	861.99
01/15/43	41.17	861.99
01/16/43	41.25	861.91
01/17/43	41.28	861.88
01/18/43	41.28	861.88
01/19/43	41.28	861.88
01/20/43	41.28	861.88
01/21/43	41.23	861.93
01/22/43	41.21	861.95
01/23/43	41.23	861.93
01/24/43	41.22	861.94
01/25/43	41.24	861.92
01/26/43	41.25	861.91
01/27/43	41.22	861.94
01/28/43	41.22	861.94
01/29/43	41.21	861.95
01/30/43	41.22	861.94
01/31/43	41.23	861.93
02/01/43	41.24	861.92
02/02/43	41.22	861.94
02/03/43	41.16	862.00
02/04/43	41.09	862.07
02/05/43	41.14	862.02
02/06/43	41.15	862.01
02/07/43	41.16	862.00
02/08/43	41.16	862.00
02/09/43	41.13	862.03
02/10/43	41.13	862.03
02/11/43	41.16	862.00
02/12/43	41.20	861.96
02/13/43	41.22	861.94
02/14/43	41.23	861.93
02/15/43	41.23	861.93
02/16/43	41.23	861.93
02/17/43	41.20	861.96
02/18/43	41.20	861.96
02/19/43	41.16	862.00
02/20/43	41.16	862.00
02/21/43	41.16	862.00
02/22/43	41.14	862.02
02/23/43	41.18	861.98
02/24/43	41.25	861.91
02/25/43	41.22	861.94
02/26/43	41.21	861.95
02/27/43	41.16	862.00
02/28/43	41.20	861.96
03/01/43	41.26	861.90
03/02/43	41.26	861.90
03/03/43	41.23	861.93
03/04/43	41.23	861.93
03/05/43	41.23	861.93
03/06/43	41.23	861.93
03/07/43	41.24	861.92
03/08/43	41.23	861.93
03/09/43	41.22	861.94
03/10/43	41.22	861.94
03/11/43	41.18	861.98
03/12/43	41.19	861.97
03/13/43	41.23	861.93
03/14/43	41.23	861.93
03/15/43	41.18	861.98
03/16/43	41.09	862.07
03/17/43	41.07	862.09
03/18/43	41.11	862.05
03/19/43	41.11	862.05
03/20/43	41.12	862.04
03/21/43	41.13	862.03
03/22/43	41.12	862.04
03/23/43	41.09	862.07
03/24/43	41.08	862.08
03/25/43	41.12	862.04
03/26/43	41.16	862.00
03/27/43	41.18	861.98
03/28/43	41.18	861.98
03/29/43	41.16	862.00
03/30/43	41.10	862.06
03/31/43	41.02	862.14

139-048-07ACB1 **(Continued)** MP Elev (msl,ft)=903.16

Fargo Aquifer SI (ft.)=0-228

Date	Depth to Water (ft)	WL Elev (msl, ft)	Date	Depth to Water (ft)	WL Elev (msl, ft)	Date	Depth to Water (ft)	WL Elev (msl, ft)	Date	Depth to Water (ft)	WL Elev (msl, ft)
04/01/43	40.83	862.33	06/20/43	40.94	862.22	09/08/43	41.73	861.43	11/27/43	41.69	861.47
04/02/43	40.40	862.76	06/21/43	41.02	862.14	09/09/43	41.75	861.41	11/28/43	41.67	861.49
04/03/43	39.05	864.11	06/22/43	41.02	862.14	09/10/43	41.77	861.39	11/29/43	41.67	861.49
04/04/43	38.00	865.16	06/23/43	40.99	862.17	09/11/43	41.75	861.41	11/30/43	41.63	861.53
04/05/43	37.29	865.87	06/24/43	41.02	862.14	09/12/43	41.74	861.42	12/01/43	41.64	861.52
04/06/43	36.77	866.39	06/25/43	40.98	862.18	09/13/43	41.72	861.44	12/02/43	41.68	861.48
04/07/43	36.73	866.43	06/26/43	40.99	862.17	09/14/43	41.67	861.49	12/03/43	41.66	861.50
04/08/43	37.22	865.94	06/27/43	40.99	862.17	09/15/43	41.71	861.45	12/04/43	41.65	861.51
04/09/43	37.70	865.46	06/28/43	40.96	862.20	09/16/43	41.74	861.42	12/05/43	41.65	861.51
04/10/43	38.14	865.02	06/29/43	40.95	862.21	09/17/43	41.74	861.42	12/06/43	41.66	861.50
04/11/43	38.66	864.50	06/30/43	40.89	862.27	09/18/43	41.68	861.48	12/07/43	41.63	861.53
04/12/43	39.23	863.93	07/01/43	40.77	862.39	09/19/43	41.69	861.47	12/08/43	41.61	861.55
04/13/43	39.80	863.36	07/02/43	40.65	862.51	09/20/43	41.70	861.46	12/09/43	41.68	861.48
04/14/43	40.20	862.96	07/03/43	40.66	862.50	09/21/43	41.67	861.49	12/10/43	41.69	861.47
04/15/43	40.73	862.43	07/04/43	40.79	862.37	09/22/43	41.72	861.44	12/11/43	41.68	861.48
04/16/43	41.17	861.99	07/05/43	40.93	862.23	09/23/43	41.74	861.42	12/12/43	41.69	861.47
04/17/43	41.38	861.78	07/06/43	41.01	862.15	09/24/43	41.73	861.43	12/13/43	41.69	861.47
04/18/43	41.44	861.72	07/07/43	41.07	862.09	09/25/43	41.74	861.42	12/14/43	41.73	861.43
04/19/43	41.44	861.72	07/08/43	41.10	862.06	09/26/43	41.71	861.45	12/17/43	41.68	861.48
04/20/43	41.38	861.78	07/09/43	41.10	862.06	09/27/43	41.69	861.47	12/18/43	41.68	861.48
04/21/43	41.32	861.84	07/10/43	41.10	862.06	09/28/43	41.72	861.44	12/19/43	41.69	861.47
04/22/43	41.26	861.90	07/11/43	41.10	862.06	09/29/43	41.72	861.44	12/20/43	41.69	861.47
04/23/43	41.25	861.91	07/12/43	41.12	862.04	09/30/43	41.75	861.41	12/21/43	41.68	861.48
04/24/43	41.21	861.95	07/13/43	41.14	862.02	10/01/43	41.77	861.39	12/22/43	41.72	861.44
04/25/43	41.23	861.93	07/14/43	41.15	862.01	10/02/43	41.77	861.39	12/23/43	41.73	861.43
04/26/43	41.23	861.93	07/15/43	41.15	862.01	10/03/43	41.76	861.40	12/24/43	41.68	861.48
04/27/43	41.19	861.97	07/16/43	41.15	862.01	10/04/43	41.76	861.40	12/25/43	41.64	861.52
04/28/43	41.19	861.97	07/17/43	41.18	861.98	10/05/43	41.77	861.39	12/26/43	41.67	861.49
04/29/43	41.19	861.97	07/18/43	41.18	861.98	10/06/43	41.78	861.38	12/27/43	41.70	861.46
04/30/43	41.20	861.96	07/19/43	41.18	861.98	10/07/43	41.78	861.38	12/28/43	41.69	861.47
05/01/43	41.20	861.96	07/20/43	41.18	861.98	10/08/43	41.75	861.41	12/29/43	41.67	861.49
05/02/43	41.13	862.03	07/21/43	41.20	861.96	10/09/43	41.74	861.42	12/30/43	41.64	861.52
05/03/43	41.14	862.02	07/22/43	41.20	861.96	10/10/43	41.74	861.42	12/31/43	41.66	861.50
05/04/43	41.14	862.02	07/23/43	41.26	861.90	10/11/43	41.70	861.46			
05/05/43	41.09	862.07	07/24/43	41.32	861.84	10/12/43	41.67	861.49	01/01/44	41.65	861.51
05/06/43	41.13	862.03	07/25/43	41.41	861.75	10/13/43	41.66	861.50	01/02/44	41.63	861.53
05/07/43	41.15	862.01	07/26/43	41.47	861.69	10/14/43	41.72	861.44	01/03/44	41.65	861.51
05/08/43	41.16	862.00	07/27/43	41.53	861.63	10/15/43	41.72	861.44	01/04/44	41.69	861.47
05/09/43	41.16	862.00	07/28/43	41.53	861.63	10/16/43	41.71	861.45	01/05/44	41.69	861.47
05/10/43	41.14	862.02	07/29/43	41.53	861.63	10/17/43	41.67	861.49	01/06/44	41.72	861.44
05/11/43	41.15	862.01	07/30/43	41.53	861.63	10/18/43	41.66	861.50	01/07/44	41.75	861.41
05/12/43	41.17	861.99	07/31/43	41.50	861.66	10/19/43	41.64	861.52	01/08/44	41.75	861.41
05/13/43	41.17	861.99	08/01/43	41.51	861.65	10/20/43	41.64	861.52	01/09/44	41.67	861.49
05/14/43	41.17	861.99	08/02/43	41.53	861.63	10/21/43	41.65	861.51	01/10/44	41.67	861.49
05/15/43	41.16	862.00	08/03/43	41.52	861.64	10/22/43	41.68	861.48	01/11/44	41.71	861.45
05/16/43	41.11	862.05	08/04/43	41.54	861.62	10/23/43	41.69	861.47	01/12/44	41.74	861.42
05/17/43	41.14	862.02	08/05/43	41.57	861.59	10/24/43	41.72	861.44	01/13/44	41.74	861.42
05/18/43	41.15	862.01	08/06/43	41.57	861.59	10/25/43	41.73	861.43	01/14/44	41.69	861.47
05/19/43	41.15	862.01	08/07/43	41.62	861.54	10/26/43	41.72	861.44	01/15/44	41.69	861.47
05/20/43	41.15	862.01	08/08/43	41.63	861.53	10/27/43	41.68	861.48	01/16/44	41.70	861.46
05/21/43	41.16	862.00	08/09/43	41.46	861.70	10/28/43	41.64	861.52	01/17/44	41.70	861.46
05/22/43	41.14	862.02	08/10/43	41.55	861.61	10/29/43	41.66	861.50	01/18/44	41.66	861.50
05/23/43	41.11	862.05	08/11/43	41.60	861.56	10/30/43	41.66	861.50	01/19/44	41.69	861.47
05/24/43	41.01	862.15	08/12/43	41.61	861.55	10/31/43	41.60	861.56	01/20/44	41.68	861.48
05/25/43	40.98	862.18	08/13/43	41.66	861.50	11/01/43	41.64	861.52	01/21/44	41.67	861.49
05/26/43	41.00	862.16	08/14/43	41.70	861.46	11/02/43	41.64	861.52	01/22/44	41.70	861.46
05/27/43	41.02	862.14	08/15/43	41.74	861.42	11/03/43	41.64	861.52	01/23/44	41.71	861.45
05/28/43	41.02	862.14	08/16/43	41.78	861.38	11/04/43	41.61	861.55	01/24/44	41.63	861.53
05/29/43	41.01	862.15	08/17/43	41.78	861.38	11/05/43	41.63	861.53	01/25/44	41.64	861.52
05/30/43	41.01	862.15	08/18/43	41.77	861.39	11/06/43	41.66	861.50	01/26/44	41.71	861.45
05/31/43	40.98	862.18	08/19/43	41.76	861.40	11/07/43	41.66	861.50	01/27/44	41.72	861.44
06/01/43	40.98	862.18	08/20/43	41.71	861.45	11/08/43	41.63	861.53	01/28/44	41.73	861.43
06/02/43	40.98	862.18	08/21/43	41.73	861.43	11/09/43	41.67	861.49	01/29/44	41.63	861.53
06/03/43	40.73	862.43	08/22/43	41.75	861.41	11/10/43	41.69	861.47	01/30/44	41.63	861.53
06/04/43	40.79	862.37	08/23/43	41.77	861.39	11/11/43	41.66	861.50	01/31/44	41.67	861.49
06/05/43	40.78	862.38	08/24/43	41.85	861.31	11/12/43	41.69	861.47	02/01/44	41.67	861.49
06/06/43	40.72	862.44	08/25/43	41.89	861.27	11/13/43	41.69	861.47	02/02/44	41.63	861.53
06/07/43	40.78	862.38	08/26/43	41.89	861.27	11/14/43	41.69	861.47	02/03/44	41.64	861.52
06/08/43	40.84	862.32	08/27/43	41.90	861.26	11/15/43	41.69	861.47	02/04/44	41.64	861.52
06/09/43	40.90	862.26	08/28/43	41.87	861.29	11/16/43	41.69	861.47	02/05/44	41.63	861.53
06/10/43	40.93	862.23	08/29/43	41.83	861.33	11/17/43	41.62	861.54	02/06/44	41.63	861.53
06/11/43	40.93	862.23	08/30/43	41.82	861.34	11/18/43	41.65	861.51	02/07/44	41.61	861.55
06/12/43	40.92	862.24	08/31/43	41.77	861.39	11/19/43	41.67	861.49	02/08/44	41.62	861.54
06/13/43	40.94	862.22	09/01/43	41.75	861.41	11/20/43	41.66	861.50	02/09/44	41.65	861.51
06/14/43	40.93	862.23	09/02/43	41.75	861.41	11/21/43	41.69	861.47	02/10/44	41.69	861.47
06/15/43	40.90	862.26	09/03/43	41.77	861.39	11/22/43	41.71	861.45	02/11/44	41.71	861.45
06/16/43	40.91	862.25	09/04/43	41.77	861.39	11/23/43	41.72	861.44	02/12/44	41.71	861.45
06/17/43	40.91	862.25	09/05/43	41.71	861.45	11/24/43	41.72	861.44	02/14/44	41.66	861.50
06/18/43	40.90	862.26	09/06/43	41.70	861.46	11/25/43	41.69	861.47	02/15/44	41.68	861.48
06/19/43	40.91	862.25	09/07/43	41.70	861.46	11/26/43	41.68	861.48	02/16/44	41.65	861.51

139-048-07ACB1 **(Continued)** MP Elev (msl,ft)=903.16

Fargo Aquifer SI (ft.)=0-228

Date	Depth to Water (ft)	WL Elev (msl, ft)
02/17/44	41.68	861.48
02/18/44	41.68	861.48
02/19/44	41.68	861.48
02/20/44	41.67	861.49
02/21/44	41.66	861.50
02/22/44	41.66	861.50
02/23/44	41.63	861.53
02/24/44	41.64	861.52
02/25/44	41.64	861.52
02/26/44	41.66	861.50
02/27/44	41.70	861.46
02/28/44	41.71	861.45
02/29/44	41.72	861.44
03/01/44	41.72	861.44
03/02/44	41.69	861.47
03/03/44	41.71	861.45
03/04/44	41.71	861.45
03/05/44	41.69	861.47
03/06/44	41.61	861.55
03/07/44	41.61	861.55
03/08/44	41.65	861.51
03/09/44	41.68	861.48
03/10/44	41.58	861.58
03/11/44	41.62	861.54
03/12/44	41.67	861.49
03/13/44	41.67	861.49
03/14/44	41.67	861.49
03/15/44	41.67	861.49
03/16/44	41.64	861.52
03/17/44	41.64	861.52
03/18/44	41.69	861.47
03/19/44	41.68	861.48
03/20/44	41.64	861.52
03/21/44	41.67	861.49
03/22/44	41.68	861.48
03/23/44	41.63	861.53
03/24/44	41.60	861.56
03/25/44	41.63	861.53
03/26/44	41.64	861.52
03/27/44	41.64	861.52
03/28/44	41.64	861.52
03/29/44	41.63	861.53
03/30/44	41.60	861.56
03/31/44	41.60	861.56
04/01/44	41.67	861.49
04/02/44	41.70	861.46
04/03/44	41.71	861.45
04/04/44	41.71	861.45
04/05/44	41.71	861.45
04/06/44	41.68	861.48
04/07/44	41.65	861.51
04/08/44	41.63	861.53
04/09/44	41.64	861.52
04/10/44	41.66	861.50
04/11/44	41.65	861.51
04/12/44	41.65	861.51
04/13/44	41.64	861.52
04/14/44	41.60	861.56
04/15/44	41.63	861.53
04/16/44	41.66	861.50
04/17/44	41.70	861.46
04/18/44	41.71	861.45
04/19/44	41.71	861.45
04/20/44	41.70	861.46
04/21/44	41.73	861.43
04/22/44	41.73	861.43
04/23/44	41.72	861.44
04/24/44	41.67	861.49
04/25/44	41.66	861.50
04/26/44	41.69	861.47
04/27/44	41.70	861.46
04/28/44	41.70	861.46
04/29/44	41.68	861.48
04/30/44	41.67	861.49
05/01/44	41.63	861.53
05/02/44	41.66	861.50
05/03/44	41.66	861.50
05/04/44	41.69	861.47
05/05/44	41.69	861.47
05/06/44	41.67	861.49
05/07/44	41.65	861.51
05/08/44	41.65	861.51
05/09/44	41.66	861.50
05/10/44	41.66	861.50
05/11/44	41.67	861.49
05/12/44	41.60	861.56
05/13/44	41.58	861.58
05/14/44	41.56	861.60
05/15/44	41.56	861.60
05/16/44	41.52	861.64
05/17/44	41.52	861.64
05/18/44	41.55	861.61
05/19/44	41.55	861.61
05/20/44	41.54	861.62
05/21/44	41.51	861.65
05/22/44	41.47	861.69
05/23/44	41.51	861.65
05/24/44	41.54	861.62
05/25/44	41.55	861.61
05/26/44	41.64	861.52
05/27/44	41.66	861.50
05/28/44	41.65	861.51
05/29/44	41.63	861.53
05/30/44	41.65	861.51
05/31/44	41.67	861.49
06/01/44	41.69	861.47
06/02/44	41.74	861.42
06/03/44	41.72	861.44
06/04/44	41.70	861.46
06/05/44	41.69	861.47
06/06/44	41.69	861.47
06/07/44	41.63	861.53
06/08/44	41.52	861.64
06/09/44	41.47	861.69
06/10/44	41.43	861.73
06/11/44	41.50	861.66
06/12/44	41.63	861.53
06/13/44	41.70	861.46
06/14/44	41.74	861.42
06/15/44	41.75	861.41
06/16/44	41.79	861.37
06/17/44	41.82	861.34
06/18/44	41.81	861.35
06/19/44	41.84	861.32
06/20/44	41.83	861.33
06/21/44	41.81	861.35
06/22/44	41.84	861.32
06/23/44	41.84	861.32
06/24/44	41.84	861.32
06/25/44	41.84	861.32
06/26/44	41.89	861.27
06/27/44	41.96	861.20
06/28/44	42.05	861.11
06/29/44	42.06	861.10
06/30/44	42.07	861.09
07/01/44	42.06	861.10
07/02/44	42.04	861.12
07/03/44	42.04	861.12
07/04/44	42.04	861.12
07/05/44	41.94	861.22
07/06/44	41.82	861.34
07/07/44	41.74	861.42
07/08/44	41.78	861.38
07/09/44	41.76	861.40
07/10/44	41.74	861.42
07/11/44	41.73	861.43
07/12/44	41.81	861.35
07/13/44	41.85	861.31
07/14/44	41.91	861.25
07/15/44	41.94	861.22
07/16/44	41.96	861.20
07/17/44	41.96	861.20
07/18/44	42.02	861.14
07/19/44	42.10	861.06
07/20/44	42.13	861.03
07/21/44	42.13	861.03
07/22/44	42.12	861.04
07/23/44	42.15	861.01
07/24/44	42.16	861.00
07/25/44	42.16	861.00
07/26/44	42.23	860.93
07/27/44	42.30	860.86
07/28/44	42.36	860.80
07/29/44	42.39	860.77
07/30/44	42.41	860.75
07/31/44	42.45	860.71
08/01/44	42.51	860.65
08/02/44	42.56	860.60
08/03/44	42.40	860.76
08/04/44	42.41	860.75
08/05/44	42.46	860.70
08/06/44	42.49	860.67
08/07/44	42.47	860.69
08/08/44	42.43	860.73
08/09/44	42.42	860.74
08/10/44	42.37	860.79
08/11/44	42.37	860.79
08/12/44	42.37	860.79
08/13/44	42.38	860.78
08/14/44	42.42	860.74
08/15/44	42.39	860.77
08/16/44	42.35	860.81
08/17/44	42.36	860.80
08/18/44	42.34	860.82
08/19/44	42.29	860.87
08/20/44	42.30	860.86
08/21/44	42.34	860.82
08/22/44	42.35	860.81
08/23/44	42.36	860.80
08/24/44	42.36	860.80
08/25/44	42.35	860.81
08/26/44	42.28	860.88
08/27/44	42.27	860.89
08/28/44	42.25	860.91
08/29/44	42.22	860.94
08/30/44	42.19	860.97
08/31/44	42.16	861.00
09/01/44	42.05	861.11
09/02/44	42.06	861.10
09/03/44	42.07	861.09
09/04/44	42.08	861.08
09/05/44	42.12	861.04
09/06/44	42.13	861.03
09/07/44	42.13	861.03
09/08/44	42.13	861.03
09/09/44	42.10	861.06
09/10/44	42.09	861.07
09/11/44	42.09	861.07
09/12/44	42.10	861.06
09/13/44	42.10	861.06
09/14/44	42.09	861.07
09/15/44	42.08	861.08
09/16/44	42.06	861.10
09/17/44	42.05	861.11
09/18/44	42.09	861.07
09/19/44	42.10	861.06
09/20/44	42.07	861.09
09/21/44	42.13	861.03
09/22/44	42.14	861.02
09/23/44	42.16	861.00
09/24/44	42.14	861.02
09/25/44	42.11	861.05
09/26/44	42.11	861.05
09/27/44	42.12	861.04
09/28/44	42.13	861.03
09/29/44	42.16	861.00
09/30/44	42.12	861.04
10/01/44	42.11	861.05
10/02/44	42.16	861.00
10/03/44	42.12	861.04
10/04/44	42.08	861.08
10/05/44	42.06	861.10
10/06/44	42.09	861.07
10/07/44	42.13	861.03
10/08/44	42.15	861.01
10/09/44	42.15	861.01
10/10/44	42.15	861.01
10/11/44	42.14	861.02
10/12/44	42.11	861.05
10/13/44	42.12	861.04
10/14/44	42.15	861.01
10/15/44	42.17	860.99
10/16/44	42.16	861.00
10/17/44	42.15	861.01
10/18/44	42.16	861.00
10/19/44	42.16	861.00
10/20/44	42.17	860.99
10/21/44	42.18	860.98
10/22/44	42.17	860.99
10/23/44	42.13	861.03
10/24/44	42.13	861.03
10/25/44	42.16	861.00
10/26/44	42.18	860.98
10/27/44	42.18	860.98
10/28/44	42.19	860.97
10/29/44	42.18	860.98
10/30/44	42.14	861.02
10/31/44	42.10	861.06
11/01/44	42.10	861.06
11/02/44	42.12	861.04
11/03/44	42.16	861.00
11/04/44	42.18	860.98
11/05/44	42.16	861.00
11/06/44	42.13	861.03
11/07/44	42.09	861.07
11/08/44	42.04	861.12
11/09/44	42.07	861.09
11/10/44	42.07	861.09
11/11/44	42.07	861.09
11/12/44	42.08	861.08
11/13/44	42.08	861.08
11/14/44	42.04	861.12
11/15/44	42.09	861.07
11/16/44	42.10	861.06
11/17/44	42.11	861.05
11/18/44	42.10	861.06
11/19/44	42.09	861.07
11/20/44	42.09	861.07
11/21/44	42.10	861.06
11/22/44	42.07	861.09
11/23/44	42.06	861.10
11/24/44	42.06	861.10
11/25/44	42.07	861.09
11/26/44	42.06	861.10
11/27/44	42.07	861.09
11/28/44	42.08	861.08
11/29/44	42.12	861.04
11/30/44	42.12	861.04
12/01/44	42.12	861.04
12/02/44	42.11	861.05
12/03/44	42.08	861.08
12/04/44	42.09	861.07
12/05/44	42.09	861.07
12/06/44	42.05	861.11
12/07/44	42.04	861.12
12/08/44	42.05	861.11
12/09/44	42.08	861.08
12/10/44	42.09	861.07
12/11/44	42.09	861.07
12/12/44	42.08	861.08
12/13/44	42.08	861.08
12/14/44	42.06	861.10
12/15/44	42.05	861.11
12/16/44	42.05	861.11
12/17/44	42.05	861.11
12/18/44	42.06	861.10
12/19/44	42.06	861.10
12/20/44	42.10	861.06
12/21/44	42.11	861.05
12/22/44	42.08	861.08
12/23/44	42.08	861.08
12/24/44	42.07	861.09
12/25/44	42.10	861.06
12/26/44	42.10	861.06
12/27/44	42.10	861.06
12/28/44	42.10	861.06
12/29/44	42.03	861.13
12/30/44	42.06	861.10
12/31/44	42.08	861.08

139-048-07ACB1 **(Continued)** MP Elev (msl,ft)=903.16

Fargo Aquifer SI (ft.)=0-228

Date	Depth to Water (ft)	WL Elev (msl, ft)	Date	Depth to Water (ft)	WL Elev (msl, ft)	Date	Depth to Water (ft)	WL Elev (msl, ft)	Date	Depth to Water (ft)	WL Elev (msl, ft)
01/01/45	42.09	861.07	03/29/45	42.05	861.11	06/17/45	42.17	860.99	09/05/45	43.45	859.71
01/02/45	42.08	861.08	03/30/45	42.05	861.11	06/18/45	42.16	861.00	09/06/45	43.50	859.66
01/03/45	42.07	861.09	03/31/45	42.01	861.15	06/19/45	42.14	861.02	09/07/45	43.58	859.58
01/04/45	42.08	861.08	04/01/45	42.01	861.15	06/20/45	42.16	861.00	09/08/45	43.57	859.59
01/05/45	42.09	861.07	04/02/45	42.04	861.12	06/21/45	42.16	861.00	09/09/45	43.60	859.56
01/06/45	42.07	861.09	04/03/45	42.05	861.11	06/22/45	42.18	860.98	09/10/45	43.60	859.56
01/07/45	42.05	861.11	04/04/45	42.05	861.11	06/23/45	42.21	860.95	09/11/45	43.61	859.55
01/13/45	42.06	861.10	04/05/45	42.02	861.14	06/24/45	42.27	860.89	09/12/45	43.59	859.57
01/14/45	42.06	861.10	04/06/45	42.00	861.16	06/25/45	42.34	860.82	09/13/45	43.59	859.57
01/15/45	42.07	861.09	04/07/45	42.01	861.15	06/26/45	42.34	860.82	09/14/45	43.55	859.61
01/16/45	42.09	861.07	04/08/45	42.01	861.15	06/27/45	42.34	860.82	09/15/45	43.56	859.60
01/17/45	42.08	861.08	04/09/45	41.97	861.19	06/28/45	42.37	860.79	09/16/45	43.53	859.63
01/18/45	42.07	861.09	04/10/45	41.98	861.18	06/29/45	42.44	860.72	09/17/45	43.45	859.71
01/19/45	42.09	861.07	04/11/45	41.97	861.19	06/30/45	42.48	860.68	09/18/45	43.41	859.75
01/20/45	42.09	861.07	04/12/45	42.02	861.14	07/01/45	42.50	860.66	09/19/45	43.37	859.79
01/21/45	42.07	861.09	04/13/45	42.11	861.05	07/02/45	42.50	860.66	09/20/45	43.33	859.83
01/22/45	42.07	861.09	04/14/45	42.12	861.04	07/03/45	42.48	860.68	09/21/45	43.34	859.82
01/23/45	42.07	861.09	04/15/45	42.09	861.07	07/04/45	42.49	860.67	09/22/45	43.31	859.85
01/24/45	42.07	861.09	04/16/45	42.03	861.13	07/05/45	42.55	860.61	09/23/45	43.29	859.87
01/25/45	42.08	861.08	04/17/45	41.98	861.18	07/06/45	42.59	860.57	09/24/45	43.30	859.86
01/26/45	42.09	861.07	04/18/45	42.02	861.14	07/07/45	42.60	860.56	09/25/45	43.31	859.85
01/27/45	42.09	861.07	04/19/45	42.02	861.14	07/08/45	42.59	860.57	09/26/45	43.31	859.85
01/28/45	42.09	861.07	04/20/45	42.03	861.13	07/09/45	42.62	860.54	09/27/45	43.33	859.83
01/29/45	42.09	861.07	04/21/45	42.04	861.12	07/10/45	42.65	860.51	09/28/45	43.34	859.82
01/30/45	42.09	861.07	04/22/45	42.01	861.15	07/11/45	42.63	860.53	09/29/45	43.33	859.83
01/31/45	42.12	861.04	04/23/45	41.96	861.20	07/12/45	42.64	860.52	09/30/45	43.31	859.85
02/01/45	42.13	861.03	04/24/45	41.96	861.20	07/13/45	42.65	860.51	10/01/45	43.27	859.89
02/02/45	42.11	861.05	04/25/45	41.98	861.18	07/14/45	42.67	860.49	10/02/45	43.30	859.86
02/03/45	42.09	861.07	04/26/45	42.00	861.16	07/15/45	42.67	860.49	10/03/45	43.28	859.88
02/04/45	42.10	861.06	04/27/45	42.01	861.15	07/16/45	42.66	860.50	10/04/45	43.23	859.93
02/05/45	42.10	861.06	04/28/45	42.01	861.15	07/17/45	42.70	860.46	10/05/45	43.23	859.93
02/06/45	42.10	861.06	04/29/45	42.05	861.11	07/18/45	42.71	860.45	10/06/45	43.22	859.94
02/07/45	42.10	861.06	04/30/45	42.06	861.10	07/19/45	42.75	860.41	10/07/45	43.24	859.92
02/08/45	42.09	861.07	05/01/45	42.06	861.10	07/20/45	42.79	860.37	10/08/45	43.26	859.90
02/09/45	42.03	861.13	05/02/45	42.05	861.11	07/21/45	42.80	860.36	10/09/45	43.25	859.91
02/10/45	42.05	861.11	05/03/45	42.04	861.12	07/22/45	42.82	860.34	10/10/45	43.20	859.96
02/11/45	42.05	861.11	05/04/45	42.06	861.10	07/23/45	42.87	860.29	10/11/45	43.23	859.93
02/12/45	42.04	861.12	05/05/45	42.03	861.13	07/24/45	42.95	860.21	10/12/45	43.26	859.90
02/13/45	41.98	861.18	05/06/45	41.99	861.17	07/25/45	43.03	860.13	10/13/45	43.26	859.90
02/14/45	42.00	861.16	05/07/45	42.01	861.15	07/26/45	43.03	860.13	10/14/45	43.26	859.90
02/15/45	42.04	861.12	05/08/45	42.05	861.11	07/27/45	43.01	860.15	10/15/45	43.25	859.91
02/16/45	42.07	861.09	05/09/45	42.05	861.11	07/28/45	43.02	860.14	10/16/45	43.20	859.96
02/17/45	42.07	861.09	05/10/45	42.05	861.11	07/29/45	43.04	860.12	10/17/45	43.16	860.00
02/18/45	42.10	861.06	05/11/45	42.03	861.13	07/30/45	43.05	860.11	10/18/45	43.16	860.00
02/19/45	42.10	861.06	05/12/45	42.04	861.12	07/31/45	43.08	860.08	10/19/45	43.18	859.98
02/20/45	42.05	861.11	05/13/45	42.07	861.09	08/01/45	43.12	860.04	10/20/45	43.19	859.97
02/21/45	42.02	861.14	05/14/45	42.08	861.08	08/02/45	43.15	860.01	10/21/45	43.19	859.97
02/22/45	42.00	861.16	05/15/45	42.10	861.06	08/03/45	43.20	859.96	10/22/45	43.20	859.96
02/23/45	42.01	861.15	05/16/45	42.10	861.06	08/04/45	43.18	859.98	10/23/45	43.20	859.96
02/24/45	42.04	861.12	05/17/45	42.11	861.05	08/05/45	43.14	860.02	10/24/45	43.20	859.96
02/25/45	42.06	861.10	05/18/45	42.12	861.04	08/06/45	43.19	859.97	10/25/45	43.18	859.98
02/26/45	42.03	861.13	05/19/45	42.10	861.06	08/07/45	43.24	859.92	10/26/45	43.19	859.97
02/27/45	42.03	861.13	05/20/45	42.05	861.11	08/08/45	43.26	859.90	10/27/45	43.17	859.99
02/28/45	42.01	861.15	05/21/45	42.05	861.11	08/09/45	43.24	859.92	10/28/45	43.19	859.97
03/01/45	42.00	861.16	05/22/45	42.09	861.07	08/10/45	43.22	859.94	10/29/45	43.23	859.93
03/02/45	42.01	861.15	05/23/45	42.11	861.05	08/11/45	43.19	859.97	10/30/45	43.18	859.98
03/03/45	42.01	861.15	05/24/45	42.09	861.07	08/12/45	43.19	859.97	10/31/45	43.17	859.99
03/04/45	42.02	861.14	05/25/45	42.13	861.03	08/13/45	43.16	860.00	11/01/45	43.12	860.04
03/05/45	42.02	861.14	05/26/45	42.14	861.02	08/14/45	43.18	859.98	11/02/45	43.16	860.00
03/06/45	42.02	861.14	05/27/45	42.13	861.03	08/15/45	43.19	859.97	11/03/45	43.18	859.98
03/07/45	42.02	861.14	05/28/45	42.14	861.02	08/16/45	43.17	859.99	11/04/45	43.17	859.99
03/08/45	42.02	861.14	05/29/45	42.16	861.00	08/17/45	43.16	860.00	11/05/45	43.13	860.03
03/09/45	42.04	861.12	05/30/45	42.14	861.02	08/18/45	43.17	859.99	11/06/45	43.13	860.03
03/10/45	42.05	861.11	05/31/45	42.13	861.03	08/19/45	43.16	860.00	11/07/45	43.14	860.02
03/11/45	42.05	861.11	06/01/45	42.06	861.10	08/20/45	43.18	859.98	11/08/45	43.15	860.01
03/12/45	42.05	861.11	06/02/45	42.10	861.06	08/21/45	43.20	859.96	11/09/45	43.19	859.97
03/13/45	42.02	861.14	06/03/45	42.11	861.05	08/22/45	43.21	859.95	11/10/45	43.20	859.96
03/14/45	41.96	861.20	06/04/45	42.11	861.05	08/23/45	43.19	859.97	11/11/45	43.16	860.00
03/15/45	41.93	861.23	06/05/45	42.11	861.05	08/24/45	43.22	859.94	11/12/45	43.12	860.04
03/16/45	41.85	861.31	06/06/45	42.13	861.03	08/25/45	43.24	859.92	11/13/45	43.16	860.00
03/17/45	41.70	861.46	06/07/45	42.14	861.02	08/26/45	43.22	859.94	11/14/45	43.17	859.99
03/18/45	41.51	861.65	06/08/45	42.14	861.02	08/27/45	43.22	859.94	11/15/45	43.16	860.00
03/19/45	40.88	862.28	06/09/45	42.12	861.04	08/28/45	43.28	859.88	11/16/45	43.10	860.06
03/20/45	40.57	862.59	06/10/45	42.11	861.05	08/29/45	43.35	859.81	11/17/45	43.12	860.04
03/21/45	40.39	862.77	06/11/45	42.13	861.03	08/30/45	43.38	859.78	11/18/45	43.14	860.02
03/22/45	40.44	862.72	06/12/45	42.13	861.03	08/31/45	43.37	859.79	11/19/45	43.14	860.02
03/23/45	40.74	862.42	06/13/45	42.13	861.03	09/01/45	43.42	859.74	11/20/45	43.13	860.03
03/24/45	41.24	861.92	06/14/45	42.15	861.01	09/02/45	43.45	859.71	11/21/45	43.14	860.02
03/27/45	41.92	861.24	06/15/45	42.17	860.99	09/03/45	43.42	859.74	11/22/45	43.15	860.01
03/28/45	42.01	861.15	06/16/45	42.17	860.99	09/04/45	43.45	859.71	11/23/45	43.16	860.00

139-048-07ACB1 **(Continued)** MP Elev (msl,ft)=903.16

Fargo Aquifer SI (ft.)=0-228

Date	Depth to Water (ft)	WL Elev (msl, ft)
11/24/45	43.14	860.02
11/25/45	43.14	860.02
11/26/45	43.13	860.03
11/27/45	43.14	860.02
11/28/45	43.14	860.02
11/29/45	43.14	860.02
11/30/45	43.14	860.02
12/01/45	43.15	860.01
12/02/45	43.18	859.98
12/03/45	43.19	859.97
12/04/45	43.19	859.97
12/05/45	43.13	860.03
12/06/45	43.07	860.09
12/07/45	43.07	860.09
12/08/45	43.10	860.06
12/09/45	43.15	860.01
12/10/45	43.16	860.00
12/29/45	43.07	860.09
12/30/45	43.10	860.06
12/31/45	43.12	860.04
01/04/46	43.04	860.12
01/05/46	43.03	860.13
01/06/46	43.10	860.06
01/07/46	43.10	860.06
01/08/46	43.08	860.08
01/09/46	43.10	860.06
01/10/46	43.09	860.07
01/11/46	43.12	860.04
01/12/46	43.15	860.01
01/13/46	43.15	860.01
01/14/46	43.16	860.00
01/18/46	43.11	860.05
01/19/46	43.11	860.05
01/20/46	43.08	860.08
01/21/46	43.10	860.06
01/22/46	43.10	860.06
01/23/46	43.08	860.08
01/24/46	43.08	860.08
01/25/46	43.10	860.06
02/08/46	42.94	860.22
02/15/46	42.89	860.27
02/16/46	42.92	860.24
02/17/46	42.95	860.21
02/18/46	42.95	860.21
02/19/46	42.94	860.22
02/20/46	42.95	860.21
02/21/46	42.92	860.24
02/22/46	42.96	860.20
02/23/46	42.96	860.20
02/24/46	42.96	860.20
02/25/46	42.92	860.24
02/26/46	42.93	860.23
02/27/46	42.93	860.23
02/28/46	42.90	860.26
03/01/46	42.89	860.27
03/02/46	42.92	860.24
03/03/46	42.94	860.22
03/04/46	42.96	860.20
03/05/46	42.95	860.21
03/06/46	42.91	860.25
03/07/46	42.96	860.20
03/08/46	42.96	860.20
03/09/46	42.96	860.20
03/10/46	42.97	860.19
03/11/46	42.95	860.21
03/12/46	42.88	860.28
03/13/46	42.93	860.23
03/14/46	42.93	860.23
03/16/46	42.94	860.22
03/17/46	42.99	860.17
03/18/46	43.00	860.16
03/19/46	42.99	860.17
03/20/46	42.95	860.21
03/21/46	42.93	860.23
03/22/46	42.86	860.30
03/23/46	42.79	860.37
03/24/46	42.71	860.45
03/25/46	42.63	860.53
03/26/46	42.59	860.57
03/27/46	42.57	860.59
03/28/46	42.56	860.60
03/29/46	42.80	860.36
03/30/46	42.95	860.21
03/31/46	42.95	860.21
04/01/46	42.91	860.25
04/02/46	42.97	860.19
04/03/46	42.97	860.19
04/04/46	42.89	860.27
04/05/46	42.91	860.25
04/06/46	42.91	860.25
04/07/46	42.89	860.27
04/08/46	42.91	860.25
04/09/46	42.91	860.25
04/10/46	42.91	860.25
04/11/46	42.92	860.24
04/13/46	42.90	860.26
04/14/46	42.90	860.26
04/15/46	42.96	860.20
04/16/46	42.96	860.20
04/17/46	42.96	860.20
04/18/46	42.98	860.18
04/20/46	42.99	860.17
04/21/46	42.98	860.18
04/22/46	42.98	860.18
04/23/46	42.99	860.17
04/24/46	42.99	860.17
04/25/46	43.04	860.12
04/26/46	43.05	860.11
04/27/46	43.05	860.11
04/28/46	43.04	860.12
04/29/46	43.05	860.11
04/30/46	43.07	860.09
05/01/46	43.10	860.06
05/02/46	43.10	860.06
05/03/46	43.09	860.07
05/04/46	43.08	860.08
05/05/46	43.07	860.09
05/06/46	43.10	860.06
05/08/46	43.08	860.08
05/09/46	43.09	860.07
05/10/46	43.11	860.05
05/11/46	43.10	860.06
05/12/46	43.10	860.06
05/13/46	43.06	860.10
05/14/46	43.08	860.08
05/15/46	43.13	860.03
05/16/46	43.12	860.04
05/17/46	43.10	860.06
05/18/46	43.06	860.10
05/19/46	43.07	860.09
05/20/46	43.08	860.08
05/21/46	43.08	860.08
05/22/46	43.08	860.08
05/23/46	43.08	860.08
05/24/46	43.11	860.05
05/25/46	43.10	860.06
05/26/46	43.14	860.02
05/27/46	43.15	860.01
05/28/46	43.15	860.01
05/29/46	43.15	860.01
05/30/46	43.13	860.03
05/31/46	43.13	860.03
06/01/46	43.17	859.99
06/02/46	43.18	859.98
06/03/46	43.20	859.96
06/04/46	43.18	859.98
06/05/46	43.15	860.01
06/06/46	43.15	860.01
06/07/46	43.10	860.06
06/08/46	43.16	860.00
06/09/46	43.17	859.99
06/10/46	43.13	860.03
06/11/46	43.16	860.00
06/12/46	43.18	859.98
06/13/46	43.21	859.95
06/14/46	43.21	859.95
06/15/46	43.19	859.97
06/16/46	43.24	859.92
06/17/46	43.28	859.88
06/18/46	43.33	859.83
06/19/46	43.33	859.83
06/20/46	43.28	859.88
06/21/46	43.24	859.92
06/22/46	43.24	859.92
06/23/46	43.24	859.92
06/24/46	43.23	859.93
06/25/46	43.23	859.93
06/26/46	43.26	859.90
06/27/46	43.22	859.94
06/28/46	43.21	859.95
06/29/46	43.21	859.95
06/30/46	43.22	859.94
07/01/46	43.24	859.92
07/02/46	43.24	859.92
07/03/46	43.21	859.95
07/04/46	43.21	859.95
07/05/46	43.22	859.94
07/06/46	43.22	859.94
07/07/46	43.20	859.96
07/08/46	43.20	859.96
07/09/46	43.19	859.97
07/10/46	43.20	859.96
07/12/46	43.25	859.91
07/13/46	43.23	859.93
07/14/46	43.28	859.88
07/15/46	43.29	859.87
07/16/46	43.28	859.88
07/17/46	43.28	859.88
07/18/46	43.32	859.84
07/19/46	43.41	859.75
07/20/46	43.45	859.71
07/21/46	43.47	859.69
07/22/46	43.47	859.69
07/23/46	43.50	859.66
07/24/46	43.54	859.62
07/25/46	43.57	859.59
07/26/46	43.56	859.60
07/27/46	43.57	859.59
07/28/46	43.60	859.56
07/29/46	43.64	859.52
07/30/46	43.66	859.50
07/31/46	43.69	859.47
08/01/46	43.74	859.42
08/02/46	43.77	859.39
08/03/46	43.82	859.34
08/04/46	43.84	859.32
08/05/46	43.85	859.31
08/06/46	43.86	859.30
08/07/46	43.86	859.30
08/08/46	43.88	859.28
08/09/46	43.96	859.20
08/10/46	43.99	859.17
08/11/46	43.99	859.17
08/12/46	43.98	859.18
08/13/46	43.98	859.18
08/14/46	43.94	859.22
08/15/46	43.93	859.23
08/16/46	43.93	859.23
08/17/46	43.96	859.20
08/18/46	44.01	859.15
08/19/46	44.03	859.13
08/20/46	44.05	859.11
08/21/46	44.07	859.09
08/22/46	44.09	859.07
08/23/46	44.10	859.06
08/24/46	44.10	859.06
08/25/46	44.11	859.05
08/26/46	44.11	859.05
08/27/46	44.11	859.05
08/28/46	44.13	859.03
08/29/46	44.11	859.05
08/30/46	44.05	859.11
08/31/46	44.04	859.12
09/01/46	44.10	859.06
09/02/46	44.11	859.05
09/03/46	44.11	859.05
09/04/46	44.08	859.08
09/05/46	44.06	859.10
09/06/46	44.12	859.04
09/07/46	44.13	859.03
09/08/46	44.13	859.03
09/09/46	44.10	859.06
09/10/46	43.96	859.20
09/11/46	43.99	859.17
09/12/46	43.99	859.17
09/13/46	43.99	859.17
09/14/46	43.97	859.19
09/15/46	43.97	859.19
09/16/46	43.96	859.20
09/17/46	43.98	859.18
09/18/46	44.00	859.16
09/19/46	43.93	859.23
09/20/46	43.92	859.24
09/21/46	43.90	859.26
09/22/46	43.90	859.26
09/23/46	43.91	859.25
09/24/46	43.92	859.24
09/25/46	43.92	859.24
09/26/46	43.92	859.24
09/27/46	43.94	859.22
09/28/46	43.98	859.18
09/29/46	43.98	859.18
09/30/46	43.98	859.18
10/01/46	43.96	859.20
10/02/46	43.92	859.24
10/03/46	43.92	859.24
10/04/46	43.95	859.21
10/05/46	43.94	859.22
10/06/46	43.92	859.24
10/07/46	43.90	859.26
10/08/46	43.85	859.31
10/09/46	43.83	859.33
10/11/46	43.77	859.39
10/12/46	43.77	859.39
10/13/46	43.78	859.38
10/14/46	43.79	859.37
10/15/46	43.80	859.36
10/16/46	43.81	859.35
10/17/46	43.81	859.35
10/18/46	43.80	859.36
10/19/46	43.82	859.34
10/20/46	43.82	859.34
10/21/46	43.81	859.35
10/22/46	43.81	859.35
10/23/46	43.81	859.35
10/24/46	43.77	859.39
10/25/46	43.76	859.40
10/26/46	43.83	859.33
10/27/46	43.87	859.29
10/28/46	43.87	859.29
11/01/46	43.78	859.38
11/02/46	43.85	859.31
11/03/46	43.89	859.27
11/04/46	43.90	859.26
11/05/46	43.90	859.26
11/06/46	43.89	859.27
11/07/46	43.81	859.35
11/08/46	43.80	859.36
11/09/46	43.81	859.35
11/10/46	43.80	859.36
11/11/46	43.80	859.36
11/12/46	43.83	859.33
11/13/46	43.83	859.33
11/14/46	43.80	859.36
11/15/46	43.75	859.41
11/16/46	43.86	859.30
11/17/46	43.88	859.28
11/18/46	43.87	859.29
11/19/46	43.84	859.32
11/20/46	43.85	859.31
11/21/46	43.81	859.35
11/22/46	43.87	859.29
11/23/46	43.86	859.30
11/24/46	43.83	859.33
11/25/46	43.83	859.33
11/26/46	43.83	859.33
11/27/46	43.86	859.30
11/28/46	43.86	859.30
11/29/46	43.86	859.30

139-048-07ACB1 **(Continued)** MP Elev (msl,ft)=903.16

Fargo Aquifer SI (ft.)=0-228

Date	Depth to Water (ft)	WL Elev (msl, ft)
11/30/46	43.88	859.28
12/01/46	43.90	859.26
12/02/46	43.90	859.26
12/03/46	43.84	859.32
12/04/46	43.81	859.35
12/05/46	43.83	859.33
12/06/46	43.83	859.33
12/07/46	43.77	859.39
12/08/46	43.77	859.39
12/09/46	43.77	859.39
12/10/46	43.78	859.38
12/11/46	43.76	859.40
12/12/46	43.74	859.42
12/13/46	43.79	859.37
12/14/46	43.79	859.37
12/15/46	43.79	859.37
12/16/46	43.77	859.39
12/17/46	43.74	859.42
12/18/46	43.75	859.41
12/19/46	43.75	859.41
12/20/46	43.71	859.45
12/21/46	43.75	859.41
12/22/46	43.75	859.41
12/23/46	43.73	859.43
12/24/46	43.75	859.41
12/25/46	43.76	859.40
12/26/46	43.78	859.38
12/27/46	43.75	859.41
12/28/46	43.78	859.38
01/03/47	43.84	859.32
01/04/47	43.83	859.33
01/05/47	43.76	859.40
01/06/47	43.76	859.40
01/07/47	43.73	859.43
01/08/47	43.77	859.39
01/09/47	43.78	859.38
01/10/47	43.75	859.41
01/11/47	43.77	859.39
01/12/47	43.77	859.39
01/13/47	43.76	859.40
01/14/47	43.73	859.43
01/15/47	43.78	859.38
01/16/47	43.77	859.39
01/17/47	43.80	859.36
01/18/47	43.80	859.36
01/19/47	43.74	859.42
01/20/47	43.79	859.37
01/24/47	43.73	859.43
01/25/47	43.73	859.43
01/26/47	43.72	859.44
01/27/47	43.78	859.38
02/07/47	43.79	859.37
02/08/47	43.79	859.37
02/09/47	43.81	859.35
02/10/47	43.82	859.34
02/11/47	43.83	859.33
02/12/47	43.83	859.33
02/13/47	43.81	859.35
02/14/47	43.82	859.34
02/15/47	43.81	859.35
02/16/47	43.80	859.36
02/17/47	43.82	859.34
02/18/47	43.84	859.32
02/19/47	43.84	859.32
02/20/47	43.83	859.33
02/21/47	43.82	859.34
02/22/47	43.82	859.34
02/23/47	43.82	859.34
02/24/47	43.82	859.34
02/25/47	43.82	859.34
02/26/47	43.82	859.34
02/27/47	43.82	859.34
02/28/47	43.82	859.34
03/01/47	43.82	859.34
03/02/47	43.82	859.34
03/03/47	43.80	859.36
03/04/47	43.80	859.36
03/05/47	43.85	859.31
03/06/47	43.85	859.31
03/07/47	43.85	859.31
03/08/47	43.85	859.31
03/09/47	43.85	859.31
03/10/47	43.85	859.31
03/11/47	43.80	859.36
03/12/47	43.81	859.35
03/13/47	43.81	859.35
03/14/47	43.80	859.36
03/15/47	43.81	859.35
03/16/47	43.81	859.35
03/17/47	43.81	859.35
03/18/47	43.82	859.34
03/19/47	43.84	859.32
03/20/47	43.84	859.32
03/21/47	43.81	859.35
03/22/47	43.77	859.39
03/23/47	43.80	859.36
03/24/47	43.80	859.36
03/25/47	43.83	859.33
03/26/47	43.83	859.33
03/27/47	43.81	859.35
03/28/47	43.78	859.38
03/29/47	43.82	859.34
03/30/47	43.82	859.34
03/31/47	43.82	859.34
04/01/47	43.82	859.34
04/02/47	43.83	859.33
04/03/47	43.82	859.34
04/04/47	43.79	859.37
04/11/47	43.40	859.76
04/12/47	43.20	859.96
04/13/47	43.20	859.96
04/14/47	41.38	861.78
04/15/47	41.48	861.68
04/16/47	41.72	861.44
04/17/47	42.08	861.08
04/18/47	42.62	860.54
04/25/47	43.95	859.21
04/26/47	43.91	859.25
04/27/47	43.87	859.29
04/28/47	43.86	859.30
05/16/47	43.80	859.36
05/17/47	43.81	859.35
05/18/47	43.82	859.34
05/19/47	43.84	859.32
05/20/47	43.84	859.32
05/21/47	43.82	859.34
05/22/47	43.82	859.34
07/02/47	44.29	858.87
07/03/47	44.29	858.87
07/04/47	44.30	858.86
07/05/47	44.34	858.82
07/06/47	44.39	858.77
07/07/47	44.43	858.73
07/08/47	44.43	858.73
07/09/47	44.43	858.73
07/14/47	44.51	858.65
07/15/47	44.53	858.63
07/16/47	44.53	858.63
07/17/47	44.57	858.59
07/18/47	44.61	858.55
07/19/47	44.62	858.54
07/20/47	44.68	858.48
07/21/47	44.70	858.46
08/20/47	45.30	857.86
08/21/47	45.30	857.86
08/22/47	45.31	857.85
08/23/47	45.34	857.82
08/24/47	45.41	857.75
08/25/47	45.44	857.72
08/26/47	45.44	857.72
08/27/47	45.50	857.66
08/28/47	45.54	857.62
08/29/47	45.51	857.65
08/30/47	45.49	857.67
08/31/47	45.49	857.67
09/01/47	45.47	857.69
09/02/47	45.47	857.69
09/03/47	45.48	857.68
09/09/47	45.38	857.78
09/10/47	45.37	857.79
09/11/47	45.38	857.78
09/12/47	45.36	857.80
09/13/47	45.33	857.83
09/14/47	45.32	857.84
09/15/47	45.35	857.81
09/16/47	45.37	857.79
09/17/47	45.31	857.85
09/26/47	45.22	857.94
09/27/47	45.27	857.89
09/28/47	45.30	857.86
09/29/47	45.30	857.86
09/30/47	45.26	857.90
10/01/47	45.22	857.94
10/02/47	45.17	857.99
10/03/47	45.14	858.02
10/04/47	45.14	858.02
10/20/47	45.10	858.06
10/21/47	45.09	858.07
10/22/47	45.14	858.02
10/23/47	45.14	858.02
10/24/47	45.12	858.04
10/25/47	45.13	858.03
10/26/47	45.13	858.03
10/27/47	45.09	858.07
11/01/47	45.11	858.05
11/02/47	45.11	858.05
11/03/47	45.07	858.09
11/04/47	45.06	858.10
11/05/47	45.02	858.14
11/06/47	45.03	858.13
11/07/47	45.03	858.13
11/08/47	44.98	858.18
11/09/47	45.00	858.16
11/10/47	45.03	858.13
11/11/47	45.03	858.13
11/12/47	45.03	858.13
11/18/47	44.95	858.21
11/19/47	44.98	858.18
11/20/47	44.98	858.18
11/21/47	44.91	858.25
11/22/47	44.91	858.25
11/23/47	44.90	858.26
12/12/47	44.79	858.37
12/13/47	44.79	858.37
12/14/47	44.72	858.44
12/15/47	44.75	858.41
12/16/47	44.74	858.42
12/17/47	44.75	858.41
12/18/47	44.74	858.42
12/19/47	44.76	858.40
01/03/48	44.82	858.34
01/04/48	44.84	858.32
01/05/48	44.86	858.30
01/06/48	44.86	858.30
01/07/48	44.84	858.32
01/08/48	44.81	858.35
01/09/48	44.88	858.28
01/10/48	44.87	858.29
01/11/48	44.82	858.34
01/12/48	44.86	858.30
01/13/48	44.86	858.30
01/31/48	44.83	858.33
02/01/48	44.85	858.31
02/14/48	44.83	858.33
02/15/48	44.81	858.35
02/16/48	44.77	858.39
02/17/48	44.80	858.36
02/18/48	44.80	858.36
02/19/48	44.83	858.33
02/21/48	44.81	858.35
02/22/48	44.81	858.35
02/23/48	44.76	858.40
02/24/48	44.79	858.37
02/25/48	44.79	858.37
02/26/48	44.75	858.41
02/27/48	44.74	858.42
02/28/48	44.70	858.46
03/07/48	44.69	858.47
03/08/48	44.65	858.51
03/09/48	44.46	858.70
03/10/48	44.72	858.44
03/11/48	44.74	858.42
03/12/48	44.73	858.43
03/13/48	44.70	858.46
05/08/48	44.68	858.48
05/28/48	45.91	857.25
05/29/48	45.93	857.23
05/30/48	45.94	857.22
05/31/48	45.94	857.22
06/01/48	45.93	857.23
06/02/48	45.95	857.21
06/03/48	45.94	857.22
06/05/48	45.56	857.60
06/06/48	46.54	856.62
06/07/48	46.51	856.65
06/08/48	46.53	856.63
06/09/48	46.52	856.64
06/10/48	46.55	856.61
06/11/48	46.55	856.61
06/12/48	46.55	856.61
06/25/48	44.97	858.19
07/09/48	45.15	858.01
07/10/48	45.16	858.00
07/11/48	45.15	858.01
07/12/48	45.15	858.01
07/13/48	45.17	857.99
07/14/48	45.18	857.98
07/15/48	45.15	858.01
07/16/48	45.13	858.03
08/29/48	45.35	857.81
08/30/48	45.35	857.81
08/31/48	45.34	857.82
09/01/48	45.37	857.79
09/02/48	45.37	857.79
09/03/48	45.37	857.79
09/04/48	45.39	857.77
09/05/48	45.40	857.76
09/06/48	45.44	857.72
09/07/48	45.45	857.71
09/08/48	45.46	857.70
09/09/48	45.47	857.69
09/10/48	45.48	857.68
09/11/48	45.47	857.69
09/12/48	45.38	857.78
09/13/48	45.42	857.74
09/14/48	45.41	857.75
09/15/48	45.36	857.80
09/16/48	45.38	857.78
09/17/48	45.48	857.68
09/18/48	45.45	857.71
09/19/48	45.45	857.71
09/20/48	45.45	857.71
09/21/48	45.47	857.69
09/22/48	45.48	857.68
09/23/48	45.49	857.67
09/24/48	45.53	857.63
09/25/48	45.62	857.54
09/26/48	45.63	857.53
09/27/48	45.63	857.53
09/28/48	45.63	857.53
09/29/48	45.62	857.54
09/30/48	45.63	857.53
10/01/48	45.66	857.50
10/02/48	45.70	857.46
10/03/48	45.50	857.66
10/04/48	45.48	857.68
10/05/48	45.43	857.73
10/06/48	45.39	857.77
10/07/48	45.41	857.75
10/08/48	45.52	857.64
10/09/48	45.52	857.64
10/10/48	45.52	857.64
10/11/48	45.55	857.61
10/12/48	45.55	857.61
10/13/48	45.56	857.60
10/14/48	45.59	857.57
10/15/48	45.56	857.60
10/16/48	45.71	857.45

139-048-07ACB1 **(Continued)** MP Elev (msl,ft)=903.16

Fargo Aquifer SI (ft.)=0-228

Date	Depth to Water (ft)	WL Elev (msl, ft)
10/17/48	45.72	857.44
10/18/48	45.70	857.46
10/19/48	45.70	857.46
10/20/48	45.70	857.46
10/21/48	45.71	857.45
10/22/48	45.74	857.42
10/23/48	45.76	857.40
10/24/48	45.75	857.41
10/25/48	45.71	857.45
10/26/48	45.72	857.44
10/27/48	45.73	857.43
10/28/48	45.73	857.43
10/29/48	45.73	857.43
10/30/48	45.71	857.45
10/31/48	45.55	857.61
11/01/48	45.57	857.59
11/02/48	45.57	857.59
11/03/48	45.55	857.61
11/04/48	45.53	857.63
11/05/48	45.51	857.65
11/06/48	45.63	857.53
11/07/48	45.67	857.49
11/08/48	45.67	857.49
11/09/48	45.66	857.50
11/10/48	45.64	857.52
11/11/48	45.63	857.53
11/12/48	45.63	857.53
11/13/48	45.63	857.53
11/14/48	45.56	857.60
11/15/48	45.58	857.58
11/16/48	45.57	857.59
11/17/48	45.56	857.60
11/18/48	45.62	857.54
11/19/48	45.63	857.53
11/20/48	45.62	857.54
11/21/48	45.60	857.56
11/22/48	45.60	857.56
11/23/48	45.59	857.57
11/24/48	45.59	857.57
11/25/48	45.56	857.60
11/26/48	45.54	857.62
11/27/48	45.60	857.56
11/28/48	45.62	857.54
11/29/48	45.61	857.55
11/30/48	45.61	857.55
12/01/48	45.61	857.55
12/02/48	45.61	857.55
12/03/48	45.59	857.57
12/04/48	45.59	857.57
12/05/48	45.48	857.68
12/06/48	45.49	857.67
12/07/48	45.50	857.66
12/08/48	45.53	857.63
12/09/48	45.57	857.59
12/10/48	45.58	857.58
12/11/48	45.53	857.63
12/12/48	45.50	857.66
12/13/48	45.58	857.58
12/14/48	45.58	857.58
12/15/48	45.56	857.60
12/16/48	45.53	857.63
12/17/48	45.56	857.60
12/18/48	45.56	857.60
12/19/48	45.60	857.56
12/20/48	45.53	857.63
12/21/48	45.54	857.62
12/22/48	45.59	857.57
12/23/48	45.60	857.56
12/24/48	45.60	857.56
12/25/48	45.64	857.52
12/26/48	45.66	857.50
12/27/48	45.62	857.54
12/28/48	45.59	857.57
12/29/48	45.64	857.52
12/30/48	45.64	857.52
01/01/49	44.49	858.67
01/02/49	44.43	858.73
01/03/49	44.47	858.69
01/04/49	44.47	858.69
01/05/49	44.34	858.82
01/06/49	44.31	858.85
01/07/49	44.31	858.85
01/08/49	45.57	857.59
01/09/49	45.66	857.50
01/10/49	45.67	857.49
01/11/49	45.68	857.48
01/12/49	45.61	857.55
01/13/49	45.53	857.63
01/14/49	45.55	857.61
01/15/49	45.39	857.77
01/16/49	45.43	857.73
01/17/49	45.44	857.72
01/18/49	45.41	857.75
01/19/49	45.45	857.71
01/20/49	45.45	857.71
01/21/49	45.43	857.73
01/22/49	45.58	857.58
01/23/49	45.58	857.58
01/24/49	45.58	857.58
01/29/49	45.58	857.58
01/30/49	45.50	857.66
01/31/49	45.47	857.69
02/01/49	45.54	857.62
02/02/49	45.54	857.62
02/03/49	45.49	857.67
02/04/49	45.49	857.67
02/05/49	45.57	857.59
02/06/49	45.56	857.60
02/07/49	45.56	857.60
02/08/49	45.58	857.58
02/09/49	45.59	857.57
02/10/49	45.63	857.53
02/11/49	45.59	857.57
02/12/49	45.58	857.58
02/13/49	45.62	857.54
02/14/49	45.61	857.55
02/15/49	45.52	857.64
02/16/49	45.59	857.57
02/17/49	45.59	857.57
02/18/49	45.62	857.54
02/19/49	45.41	857.75
02/20/49	45.48	857.68
02/21/49	45.49	857.67
02/22/49	45.46	857.70
02/23/49	45.45	857.71
02/24/49	45.47	857.69
02/25/49	45.49	857.67
02/26/49	45.52	857.64
02/27/49	45.52	857.64
02/28/49	45.52	857.64
03/01/49	45.49	857.67
03/02/49	45.47	857.69
03/03/49	45.47	857.69
03/04/49	45.49	857.67
03/05/49	45.49	857.67
03/06/49	45.45	857.71
03/07/49	45.44	857.72
03/08/49	45.48	857.68
03/09/49	45.48	857.68
03/10/49	45.48	857.68
03/11/49	45.48	857.68
03/12/49	45.45	857.71
03/13/49	45.50	857.66
03/14/49	45.52	857.64
03/15/49	45.52	857.64
03/16/49	45.49	857.67
03/17/49	45.49	857.67
03/18/49	45.42	857.74
03/19/49	45.40	857.76
03/20/49	45.46	857.70
03/21/49	45.44	857.72
03/22/49	45.45	857.71
03/23/49	45.45	857.71
03/24/49	45.44	857.72
03/25/49	45.39	857.77
03/26/49	45.53	857.63
03/27/49	45.51	857.65
03/28/49	45.53	857.63
03/29/49	45.58	857.58
03/30/49	45.58	857.58
03/31/49	45.57	857.59
04/01/49	45.56	857.60
04/02/49	45.54	857.62
04/03/49	45.43	857.73
04/04/49	45.42	857.74
04/05/49	45.40	857.76
04/06/49	45.39	857.77
04/07/49	45.41	857.75
04/08/49	45.45	857.71
04/09/49	45.45	857.71
04/10/49	45.48	857.68
04/11/49	45.48	857.68
04/12/49	45.43	857.73
04/13/49	45.47	857.69
04/14/49	45.51	857.65
04/15/49	45.53	857.63
04/16/49	45.51	857.65
04/17/49	45.53	857.63
04/18/49	45.54	857.62
04/19/49	45.54	857.62
04/20/49	45.51	857.65
04/21/49	45.50	857.66
04/22/49	45.50	857.66
04/23/49	45.56	857.60
04/24/49	45.56	857.60
04/25/49	45.53	857.63
04/26/49	45.55	857.61
04/27/49	45.59	857.57
04/28/49	45.56	857.60
04/29/49	45.53	857.63
04/30/49	45.50	857.66
05/01/49	45.49	857.67
05/02/49	45.46	857.70
05/03/49	45.47	857.69
05/04/49	45.50	857.66
05/05/49	45.50	857.66
05/06/49	45.53	857.63
05/07/49	45.53	857.63
05/08/49	45.51	857.65
05/09/49	45.54	857.62
05/10/49	45.54	857.62
05/11/49	45.54	857.62
05/12/49	45.53	857.63
05/13/49	45.55	857.61
05/14/49	45.58	857.58
05/15/49	45.57	857.59
05/16/49	45.56	857.60
05/17/49	45.55	857.61
05/18/49	45.53	857.63
05/19/49	45.56	857.60
05/20/49	45.56	857.60
05/21/49	45.50	857.66
05/22/49	45.50	857.66
05/23/49	45.55	857.61
05/24/49	45.56	857.60
05/25/49	45.56	857.60
05/26/49	45.57	857.59
05/27/49	45.58	857.58
05/28/49	45.57	857.59
05/29/49	45.55	857.61
05/30/49	45.56	857.60
05/31/49	45.56	857.60
06/01/49	45.54	857.62
06/02/49	45.52	857.64
06/03/49	45.57	857.59
06/04/49	45.56	857.60
06/05/49	45.55	857.61
06/06/49	45.59	857.57
06/07/49	45.60	857.56
06/08/49	45.59	857.57
06/09/49	45.60	857.56
06/10/49	45.59	857.57
06/11/49	45.56	857.60
06/12/49	45.54	857.62
06/13/49	45.56	857.60
06/14/49	45.55	857.61
06/15/49	45.56	857.60
06/16/49	45.56	857.60
06/17/49	45.53	857.63
06/18/49	45.54	857.62
06/19/49	45.54	857.62
06/20/49	45.51	857.65
06/21/49	45.51	857.65
06/22/49	45.51	857.65
06/23/49	45.49	857.67
06/24/49	45.49	857.67
06/25/49	45.51	857.65
06/26/49	45.51	857.65
06/27/49	45.52	857.64
06/28/49	45.53	857.63
06/29/49	45.50	857.66
07/01/49	45.57	857.59
07/02/49	45.57	857.59
07/03/49	45.54	857.62
07/04/49	45.56	857.60
07/05/49	45.56	857.60
07/06/49	45.58	857.58
07/07/49	45.52	857.64
07/08/49	45.52	857.64
07/09/49	45.57	857.59
07/10/49	45.55	857.61
07/11/49	45.50	857.66
07/12/49	45.44	857.72
07/13/49	45.46	857.70
07/14/49	45.50	857.66
07/15/49	45.52	857.64
07/16/49	45.51	857.65
07/17/49	45.50	857.66
07/18/49	45.54	857.62
07/19/49	45.57	857.59
07/20/49	45.57	857.59
07/21/49	45.54	857.62
07/22/49	45.60	857.56
07/23/49	45.59	857.57
07/24/49	45.58	857.58
07/25/49	45.59	857.57
07/26/49	45.60	857.56
07/27/49	45.60	857.56
07/28/49	45.58	857.58
07/29/49	45.63	857.53
07/30/49	45.63	857.53
07/31/49	45.63	857.53
08/01/49	45.61	857.55
08/02/49	45.65	857.51
08/03/49	45.66	857.50
08/04/49	45.66	857.50
08/05/49	45.65	857.51
08/06/49	45.67	857.49
08/07/49	45.67	857.49
08/08/49	45.80	857.36
08/12/49	45.81	857.35
08/13/49	45.81	857.35
08/14/49	45.83	857.33
08/15/49	45.84	857.32
08/16/49	45.84	857.32
08/17/49	45.86	857.30
08/18/49	45.86	857.30
08/19/49	45.90	857.26
09/02/49	45.97	857.19
09/03/49	45.98	857.18
09/04/49	46.01	857.15
09/05/49	46.04	857.12
09/06/49	46.05	857.11
09/07/49	46.05	857.11
09/08/49	46.05	857.11
09/09/49	46.05	857.11
09/10/49	46.01	857.15
09/11/49	45.98	857.18
09/13/49	46.01	857.15
09/14/49	46.02	857.14
09/15/49	46.02	857.14
09/16/49	46.00	857.16
09/17/49	46.01	857.15
09/18/49	46.02	857.14
09/19/49	46.06	857.10
09/20/49	46.06	857.10
09/21/49	46.08	857.08
09/22/49	46.09	857.07
09/23/49	46.12	857.04

139-048-07ACB1 **(Continued)** MP Elev (msl,ft)=903.16

Fargo Aquifer SI (ft.)=0-228

Date	Depth to Water (ft)	WL Elev (msl. ft)	Date	Depth to Water (ft)	WL Elev (msl. ft)	Date	Depth to Water (ft)	WL Elev (msl. ft)	Date	Depth to Water (ft)	WL Elev (msl. ft)
09/24/49	46.12	857.04	12/18/49	45.98	857.18	09/09/50	46.14	857.02	12/01/50	46.26	856.90
09/25/49	46.01	857.15	12/19/49	45.98	857.18	09/10/50	46.11	857.05	12/02/50	45.90	857.26
09/26/49	46.07	857.09	12/20/49	45.97	857.19	09/11/50	46.10	857.06	12/03/50	45.91	857.25
09/27/49	46.11	857.05	12/21/49	45.97	857.19	09/12/50	46.10	857.06	12/04/50	45.90	857.26
09/28/49	46.14	857.02	12/22/49	45.96	857.20	09/13/50	46.11	857.05	12/05/50	45.98	857.18
09/29/49	46.15	857.01	12/23/49	45.98	857.18	09/14/50	46.12	857.04	12/06/50	45.98	857.18
09/30/49	46.13	857.03	12/24/49	45.98	857.18	09/15/50	46.12	857.04	12/07/50	45.92	857.24
10/01/49	46.10	857.06	12/25/49	45.96	857.20	09/16/50	46.12	857.04	12/08/50	45.87	857.29
10/02/49	45.88	857.28	12/26/49	45.96	857.20	09/17/50	46.10	857.06	12/09/50	45.88	857.28
10/07/49	46.10	857.06	12/27/49	45.96	857.20	09/18/50	46.08	857.08	12/10/50	45.90	857.26
10/08/49	46.14	857.02	12/28/49	45.97	857.19	09/19/50	46.09	857.07	12/11/50	45.85	857.31
10/09/49	46.14	857.02	12/29/49	45.99	857.17	09/20/50	46.08	857.08	12/12/50	45.85	857.31
10/10/49	46.09	857.07	12/30/49	45.99	857.17	09/21/50	46.08	857.08	12/13/50	45.85	857.31
10/11/49	46.03	857.13	12/31/49	46.01	857.15	09/22/50	45.08	858.08	12/14/50	45.85	857.31
10/12/49	46.03	857.13				09/23/50	46.14	857.02	12/15/50	45.88	857.28
10/13/49	46.10	857.06	04/01/50	45.13	858.03	09/24/50	46.14	857.02	12/16/50	45.88	857.28
10/14/49	46.12	857.04	04/15/50	45.54	857.62	09/25/50	46.11	857.05	12/17/50	45.91	857.25
10/15/49	46.10	857.06	04/22/50	45.62	857.54	09/26/50	46.10	857.06	12/18/50	45.91	857.25
10/16/49	46.09	857.07	07/07/50	45.63	857.53	09/27/50	46.06	857.10	12/19/50	45.90	857.26
10/17/49	46.10	857.06	07/08/50	45.63	857.53	09/28/50	46.12	857.04	12/20/50	45.90	857.26
10/18/49	46.10	857.06	07/09/50	45.63	857.53	09/29/50	46.12	857.04	12/21/50	45.89	857.27
10/19/49	46.07	857.09	07/10/50	45.63	857.53	09/30/50	46.12	857.04	12/22/50	45.88	857.28
10/20/49	46.06	857.10	07/11/50	45.63	857.53	10/01/50	46.08	857.08	12/23/50	46.27	856.89
10/22/49	46.00	857.16	07/12/50	45.63	857.53	10/02/50	46.05	857.11	12/24/50	46.29	856.87
10/23/49	46.05	857.11	07/13/50	45.63	857.53	10/03/50	46.08	857.08	12/25/50	46.29	856.87
10/24/49	46.06	857.10	07/14/50	45.63	857.53	10/04/50	46.06	857.10	12/26/50	46.29	856.87
10/25/49	46.28	856.88	07/15/50	45.64	857.52	10/05/50	45.96	857.20	12/27/50	46.29	856.87
10/26/49	46.02	857.14	07/16/50	45.64	857.52	10/06/50	45.93	857.23	12/28/50	46.22	856.94
10/27/49	45.99	857.17	07/17/50	45.64	857.52	10/07/50	46.05	857.11	12/29/50	46.22	856.94
10/28/49	46.00	857.16	07/18/50	45.64	857.52	10/08/50	46.11	857.05	12/30/50	46.22	856.94
10/29/49	45.98	857.18	07/19/50	45.64	857.52	10/09/50	46.11	857.05			
10/30/49	46.03	857.13	07/20/50	45.64	857.52	10/10/50	46.08	857.08	01/06/51	45.95	857.21
10/31/49	46.03	857.13	07/21/50	45.70	857.46	10/11/50	46.08	857.08	01/13/51	45.83	857.33
11/01/49	45.97	857.19	07/22/50	45.70	857.46	10/12/50	46.09	857.07	01/19/51	45.94	857.22
11/02/49	46.04	857.12	07/23/50	45.70	857.46	10/13/50	46.11	857.05	01/27/51	45.96	857.20
11/03/49	46.03	857.13	07/24/50	45.70	857.46	10/14/50	46.10	857.06	02/02/51	45.92	857.24
11/04/49	46.05	857.11	07/25/50	45.70	857.46	10/15/50	46.10	857.06	02/09/51	45.93	857.23
11/05/49	46.05	857.11	07/26/50	45.70	857.46	10/16/50	46.10	857.06	02/16/51	45.80	857.36
11/06/49	46.03	857.13	07/27/50	45.70	857.46	10/17/50	46.12	857.04	02/23/51	45.82	857.34
11/07/49	46.01	857.15	07/30/50	45.69	857.47	10/18/50	46.08	857.08	03/04/51	45.69	857.47
11/08/49	45.98	857.18	07/31/50	45.69	857.47	10/19/50	46.13	857.03	03/09/51	45.79	857.37
11/09/49	45.96	857.20	08/01/50	45.69	857.47	10/20/50	46.12	857.04	03/17/51	45.71	857.45
11/10/49	45.94	857.22	08/02/50	45.69	857.47	10/21/50	46.06	857.10	03/24/51	45.65	857.51
11/11/49	45.97	857.19	08/03/50	45.69	857.47	10/22/50	46.06	857.10	03/31/51	45.61	857.55
11/12/49	45.97	857.19	08/04/50	45.69	857.47	10/23/50	46.06	857.10	04/07/51	45.25	857.91
11/13/49	45.96	857.20	08/05/50	45.62	857.54	10/24/50	46.06	857.10	04/21/51	45.70	857.46
11/14/49	45.95	857.21	08/06/50	45.62	857.54	10/25/50	46.06	857.10	04/27/51	45.60	857.56
11/15/49	45.95	857.21	08/07/50	45.62	857.54	10/26/50	46.01	857.15	05/04/51	45.60	857.56
11/16/49	45.97	857.19	08/08/50	45.62	857.54	10/27/50	46.01	857.15	05/18/51	45.65	857.51
11/17/49	46.02	857.14	08/09/50	45.62	857.54	10/28/50	46.01	857.15	05/26/51	45.62	857.54
11/18/49	46.02	857.14	08/10/50	45.62	857.54	10/29/50	46.00	857.16	06/01/51	45.60	857.56
11/19/49	45.97	857.19	08/11/50	45.63	857.53	10/30/50	46.01	857.15	06/08/51	45.66	857.50
11/20/49	46.00	857.16	08/12/50	45.62	857.54	10/31/50	46.02	857.14	06/16/51	45.60	857.56
11/21/49	46.02	857.14	08/13/50	45.62	857.54	11/01/50	46.04	857.12	06/22/51	45.60	857.56
11/22/49	45.99	857.17	08/14/50	45.63	857.53	11/02/50	46.10	857.06	06/29/51	45.70	857.46
11/23/49	45.99	857.17	08/15/50	45.64	857.52	11/03/50	46.10	857.06	07/06/51	46.06	857.10
11/24/49	45.98	857.18	08/16/50	45.64	857.52	11/04/50	46.08	857.08	07/13/51	45.79	857.37
11/25/49	45.96	857.20	08/17/50	45.64	857.52	11/05/50	46.01	857.15	07/20/51	45.79	857.37
11/26/49	45.97	857.19	08/18/50	45.64	857.52	11/06/50	46.05	857.11	07/27/51	45.76	857.40
11/27/49	45.97	857.19	08/19/50	45.66	857.50	11/07/50	46.05	857.11	08/03/51	45.79	857.37
11/28/49	45.97	857.19	08/20/50	45.66	857.50	11/08/50	46.03	857.13	08/10/51	45.00	858.16
11/29/49	45.96	857.20	08/21/50	45.66	857.50	11/10/50	46.07	857.09	08/24/51	45.87	857.29
11/30/49	45.96	857.20	08/22/50	45.66	857.50	11/11/50	46.07	857.09	08/31/51	45.89	857.27
12/01/49	45.98	857.18	08/23/50	45.67	857.49	11/12/50	46.07	857.09	09/08/51	45.66	857.50
12/02/49	45.98	857.18	08/24/50	45.67	857.49	11/13/50	46.07	857.09	09/14/51	45.80	857.36
12/03/49	45.95	857.21	08/25/50	45.67	857.49	11/14/50	46.01	857.15	09/21/51	45.67	857.49
12/04/49	45.97	857.19	08/26/50	45.69	857.47	11/15/50	46.00	857.16	09/28/51	45.85	857.31
12/05/49	45.97	857.19	08/27/50	45.69	857.47	11/16/50	46.05	857.11	10/05/51	45.80	857.36
12/06/49	45.95	857.21	08/28/50	45.69	857.47	11/17/50	46.04	857.12	10/12/51	45.81	857.35
12/07/49	45.98	857.18	08/29/50	45.69	857.47	11/18/50	45.96	857.20	10/19/51	45.85	857.31
12/08/49	46.01	857.15	08/30/50	45.69	857.47	11/19/50	46.05	857.11	10/26/51	45.84	857.32
12/09/49	46.00	857.16	08/31/50	45.69	857.47	11/20/50	46.05	857.11	11/02/51	45.73	857.43
12/10/49	45.94	857.22	09/01/50	45.69	857.47	11/21/50	46.04	857.12	11/09/51	45.68	857.48
12/11/49	45.95	857.21	09/02/50	45.68	857.48	11/22/50	46.04	857.12	11/16/51	45.72	857.44
12/12/49	45.95	857.21	09/03/50	45.68	857.48	11/25/50	46.32	856.84	11/23/51	45.68	857.48
12/13/49	45.95	857.21	09/04/50	45.68	857.48	11/26/50	46.32	856.84	11/30/51	45.65	857.51
12/14/49	45.95	857.21	09/05/50	45.68	857.48	11/27/50	46.31	856.85	12/07/51	45.56	857.60
12/15/49	45.94	857.22	09/06/50	45.68	857.48	11/28/50	46.31	856.85	12/14/51	45.59	857.57
12/16/49	45.94	857.22	09/07/50	45.68	857.48	11/29/50	46.29	856.87	12/22/51	45.45	857.71
12/17/49	45.94	857.22	09/08/50	45.68	857.48	11/30/50	46.27	856.89	12/28/51	45.42	857.74

139-048-07ACB1 **(Continued)** MP Elev (msl,ft)=903.16

Fargo Aquifer SI (ft.)=0-228

Date	Depth to Water (ft)	WL Elev (msl, ft)
01/04/52	45.41	857.75
01/11/52	45.45	857.71
01/18/52	45.41	857.75
01/25/52	45.13	858.03
02/02/52	45.34	857.82
02/08/52	45.25	857.91
02/15/52	45.35	857.81
02/23/52	45.31	857.85
02/29/52	45.32	857.84
03/07/52	45.31	857.85
03/14/52	45.32	857.84
03/22/52	45.28	857.88
03/29/52	45.23	857.93
04/05/52	45.34	857.82
04/26/52	45.49	857.67
05/03/52	45.55	857.61
05/09/52	45.52	857.64
05/16/52	45.49	857.67
05/23/52	45.46	857.70
05/31/52	45.48	857.68
06/06/52	45.51	857.65
06/14/52	45.57	857.59
06/21/52	45.61	857.55
06/28/52	45.57	857.59
07/05/52	45.37	857.79
07/11/52	45.51	857.65
07/18/52	45.52	857.64
07/25/52	45.52	857.64
08/02/52	45.59	857.57
08/09/52	45.59	857.57
08/15/52	45.62	857.54
08/23/52	45.68	857.48
08/30/52	45.53	857.63
09/06/52	45.64	857.52
09/13/52	45.64	857.52
09/20/52	45.70	857.46
09/26/52	45.67	857.49
10/10/52	45.70	857.46
10/17/52	45.60	857.56
10/24/52	45.71	857.45
10/31/52	45.66	857.50
11/08/52	45.76	857.40
11/13/52	45.68	857.48
11/22/52	45.62	857.54
11/29/52	45.60	857.56
12/06/52	45.37	857.79
12/13/52	44.95	858.21
12/21/52	45.56	857.60
12/27/52	45.52	857.64
01/03/53	45.50	857.66
01/10/53	45.48	857.68
01/17/53	45.46	857.70
01/24/53	45.48	857.68
01/31/53	45.43	857.73
02/07/53	45.43	857.73
02/14/53	45.40	857.76
02/21/53	45.42	857.74
02/28/53	45.46	857.70
03/07/53	45.92	857.24
03/14/53	45.36	857.80
03/21/53	45.22	857.94
03/28/53	45.35	857.81
04/05/53	45.37	857.79
04/11/53	45.30	857.86
04/18/53	45.35	857.81
04/27/53	45.26	857.90
05/02/53	45.14	858.02
05/09/53	45.19	857.97
05/16/53	45.17	857.99
05/23/53	45.11	858.05
05/30/53	44.77	858.39
06/07/53	45.16	858.00
06/14/53	45.13	858.03
06/28/53	45.06	858.10
07/06/53	45.13	858.03
07/12/53	45.18	857.98
07/20/53	45.18	857.98
07/26/53	45.32	857.84
08/03/53	45.24	857.92
08/09/53	45.26	857.90
08/16/53	45.32	857.84
08/23/53	45.40	857.76
08/30/53	45.27	857.89
09/06/53	45.42	857.74
09/12/53	45.47	857.69
09/19/53	45.40	857.76
09/27/53	45.41	857.75
10/04/53	45.52	857.64
10/11/53	45.51	857.65
10/18/53	45.50	857.66
10/25/53	45.48	857.68
11/02/53	45.46	857.70
11/07/53	45.46	857.70
11/14/53	45.46	857.70
11/21/53	45.32	857.84
11/28/53	45.28	857.88
12/06/53	45.25	857.91
12/12/53	45.19	857.97
12/20/53	45.05	858.11
12/27/53	45.25	857.91
01/03/54	45.19	857.97
01/10/54	45.20	857.96
01/17/54	45.24	857.92
01/24/54	45.20	857.96
02/01/54	45.22	857.94
02/07/54	45.17	857.99
02/14/54	45.05	858.11
02/21/54	45.12	858.04
03/01/54	45.21	857.95
03/07/54	45.18	857.98
03/14/54	45.19	857.97
03/21/54	45.16	858.00
04/01/54	45.12	858.04
04/04/54	45.14	858.02
04/11/54	45.18	857.98
04/18/54	45.13	858.03
04/25/54	45.16	858.00
05/02/54	45.10	858.06
05/09/54	45.11	858.05
05/17/54	45.15	858.01
05/24/54	45.11	858.05
05/31/54	45.07	858.09
06/06/54	45.08	858.08
06/14/54	45.05	858.11
06/21/54	45.10	858.06
06/28/54	45.15	858.01
07/06/54	45.11	858.05
07/12/54	45.22	857.94
07/19/54	45.29	857.87
07/26/54	45.37	857.79
08/01/54	45.29	857.87
08/08/54	45.23	857.93
08/15/54	45.36	857.80
08/22/54	45.41	857.75
08/30/54	45.46	857.70
09/05/54	45.44	857.72
09/12/54	45.35	857.81
09/20/54	45.37	857.79
09/26/54	45.30	857.86
10/03/54	45.35	857.81
10/10/54	45.46	857.70
10/17/54	45.29	857.87
10/24/54	45.37	857.79
10/31/54	45.39	857.77
11/08/54	45.50	857.66
11/14/54	45.40	857.76
11/21/54	45.41	857.75
11/28/54	45.32	857.84
12/05/54	45.45	857.71
12/12/54	45.39	857.77
12/20/54	45.33	857.83
12/26/54	45.39	857.77
01/02/55	45.33	857.83
01/09/55	45.34	857.82
01/16/55	45.35	857.81
01/23/55	45.27	857.89
01/30/55	45.31	857.85
02/06/55	45.31	857.85
02/13/55	45.31	857.85
02/21/55	45.32	857.84
02/27/55	45.22	857.94
03/06/55	45.22	857.94
03/13/55	45.15	858.01
03/21/55	45.18	857.98
03/27/55	45.21	857.95
04/03/55	45.07	858.09
04/10/55	45.18	857.98
04/18/55	45.20	857.96
04/24/55	45.20	857.96
05/01/55	45.20	857.96
05/08/55	45.24	857.92
05/16/55	45.34	857.82
05/21/55	45.32	857.84
05/29/55	45.27	857.89
06/05/55	45.19	857.97
06/13/55	45.25	857.91
06/21/55	45.26	857.90
06/26/55	45.36	857.80
07/02/55	45.33	857.83
07/10/55	45.25	857.91
07/16/55	45.16	858.00
07/25/55	45.20	857.96
08/01/55	45.30	857.86
08/08/55	45.30	857.86
08/15/55	45.40	857.76
08/22/55	45.46	857.70
08/28/55	45.42	857.74
09/05/55	45.50	857.66
09/11/55	45.55	857.61
09/19/55	45.55	857.61
09/26/55	45.64	857.52
10/03/55	45.54	857.62
10/09/55	45.52	857.64
10/17/55	45.40	857.76
10/22/55	45.54	857.62
10/28/55	45.53	857.63
11/05/55	45.54	857.62
11/15/55	45.53	857.63
11/22/55	45.48	857.68
11/28/55	45.56	857.60
12/05/55	45.50	857.66
12/13/55	45.50	857.66
12/18/55	45.52	857.64
12/28/55	45.40	857.76
01/03/62	49.29	853.87
01/20/62	49.23	853.93
01/26/62	49.18	853.98
02/02/62	49.14	854.02
02/09/62	49.17	853.99
02/16/62	49.09	854.07
02/23/62	49.07	854.09
03/02/62	49.04	854.12
03/09/62	48.95	854.21
03/16/62	49.01	854.15
03/23/62	49.08	854.08
03/30/62	49.15	854.01
04/06/62	49.20	853.96
04/13/62	49.14	854.02
04/19/62	49.08	854.08
04/30/62	49.15	854.01
05/07/62	49.12	854.04
05/14/62	49.13	854.03
05/21/62	48.89	854.27
05/25/62	48.42	854.74
06/01/62	49.14	854.02
06/08/62	49.14	854.02
06/15/62	48.48	854.68
06/20/62	48.73	854.43
06/29/62	48.91	854.25
07/06/62	49.02	854.14
07/20/62	49.00	854.16
07/27/62	48.82	854.34
08/03/62	49.20	853.96
08/10/62	49.10	854.06
08/17/62	49.20	853.96
08/24/62	49.29	853.87
08/31/62	49.30	853.86
09/07/62	49.31	853.85
09/14/62	49.30	853.86
09/21/62	49.36	853.80
09/28/62	49.40	853.76
10/05/62	49.39	853.77
10/12/62	49.40	853.76
10/14/62	49.39	853.77
10/26/62	49.38	853.78
11/02/62	49.38	853.78
11/09/62	49.30	853.86
11/16/62	49.26	853.90
11/23/62	49.20	853.96
11/30/62	49.20	853.96
12/07/62	49.61	853.55
12/14/62	49.22	853.94
12/26/62	49.24	853.92
01/11/63	49.23	853.93
01/18/63	49.24	853.92
01/25/63	49.23	853.93
02/01/63	49.22	853.94
02/08/63	49.21	853.95
02/15/63	49.20	853.96
02/21/63	49.22	853.94
03/01/63	49.23	853.93
03/08/63	49.24	853.92
03/15/63	49.23	853.93
03/25/63	49.21	853.95
03/29/63	49.20	853.96
04/08/63	49.15	854.01
04/15/63	49.17	853.99
04/22/63	49.21	853.95
04/29/63	49.26	853.90
05/06/63	49.25	853.91
05/13/63	49.28	853.88
05/20/63	49.31	853.85
05/27/63	49.36	853.80
06/03/63	49.30	853.86
06/10/63	49.14	854.02
06/17/63	49.12	854.04
06/28/63	49.55	853.61
07/12/63	49.66	853.50
07/19/63	49.72	853.44
07/26/63	49.73	853.43
08/02/63	49.73	853.43
08/12/63	49.72	853.44
08/19/63	49.75	853.41
08/26/63	49.83	853.33
09/04/63	49.88	853.28
09/16/63	49.88	853.28
09/23/63	49.90	853.26
10/07/63	49.91	853.25
10/14/63	49.94	853.22
10/21/63	49.94	853.22
10/28/63	49.93	853.23
11/04/63	49.95	853.21
11/15/63	49.93	853.23
11/26/63	49.92	853.24
12/03/63	49.89	853.27
12/10/63	49.91	853.25
12/17/63	49.89	853.27
12/24/63	49.87	853.29
01/03/64	49.90	853.26
01/13/64	49.90	853.26
01/20/64	49.84	853.32
01/27/64	49.86	853.30
02/03/64	49.83	853.33
02/10/64	49.80	853.36
02/16/64	49.82	853.34
02/24/64	50.09	853.07
03/02/64	49.90	853.26
03/13/64	49.83	853.33
03/20/64	49.82	853.34
03/27/64	49.80	853.36
04/03/64	49.89	853.27
04/10/64	49.81	853.35
04/25/64	49.67	853.49

139-048-07ACB1 **(Continued)** MP Elev (msl,ft)=903.16

Fargo Aquifer SI (ft.)=0-228

Date	Depth to Water (ft)	WL Elev (msl, ft)	Date	Depth to Water (ft)	WL Elev (msl, ft)	Date	Depth to Water (ft)	WL Elev (msl, ft)	Date	Depth to Water (ft)	WL Elev (msl, ft)
05/18/64	49.69	853.47	11/23/64	50.28	852.88	05/10/65	50.05	853.11	11/08/65	50.27	852.89
05/25/64	49.75	853.41	11/30/64	50.26	852.90	05/17/65	50.05	853.11	11/15/65	50.21	852.95
05/30/64	49.85	853.31	12/07/64	50.24	852.92	05/24/65	50.08	853.08	11/22/65	50.19	852.97
06/05/64	49.90	853.26	12/14/64	50.19	852.97	06/02/65	50.09	853.07	12/06/65	50.13	853.03
06/12/64	49.87	853.29	12/21/64	50.17	852.99	06/11/65	49.98	853.18	12/13/65	50.11	853.05
06/19/64	49.80	853.36	12/28/64	50.19	852.97	06/18/65	50.03	853.13	12/20/65	50.08	853.08
07/03/64	49.98	853.18				06/25/65	50.04	853.12	12/30/65	50.07	853.09
07/10/64	50.01	853.15	01/04/65	50.20	852.96	07/02/65	50.13	853.03			
07/17/64	50.08	853.08	01/11/65	50.20	852.96	07/09/65	50.20	852.96	01/10/66	50.09	853.07
07/27/64	50.11	853.05	01/18/65	50.17	852.99	07/16/65	50.32	852.84	01/17/66	50.10	853.06
08/03/64	50.22	852.94	01/25/65	50.18	852.98	07/28/65	50.40	852.76	01/24/66	50.11	853.05
08/10/64	50.24	852.92	02/01/65	50.16	853.00	08/06/65	50.46	852.70	01/31/66	50.13	853.03
08/19/64	50.18	852.98	02/08/65	50.19	852.97	08/13/65	50.50	852.66	02/07/66	50.14	853.02
08/28/64	50.02	853.14	02/15/65	50.20	852.96	08/20/65	50.52	852.64	02/14/66	50.14	853.02
09/07/64	50.00	853.16	02/22/65	50.16	853.00	08/27/65	50.21	852.95	02/21/66	50.15	853.01
09/14/64	50.06	853.10	03/01/65	50.18	852.98	09/03/65	50.35	852.81	02/28/66	50.17	852.99
09/21/64	50.18	852.98	03/08/65	50.15	853.01	09/13/65	50.40	852.76	03/14/66	49.85	853.31
09/28/64	50.27	852.89	03/15/65	50.16	853.00	09/20/65	50.36	852.80	03/21/66	48.98	854.18
10/05/64	50.31	852.85	03/26/65	50.13	853.03	09/27/65	50.27	852.89	03/28/66	49.22	853.94
10/12/64	50.31	852.85	04/07/65	50.08	853.08	10/04/65	50.34	852.82	04/05/66	49.98	853.18
10/19/64	50.28	852.88	04/12/65	48.74	854.42	10/11/65	50.39	852.77	04/12/66	50.00	853.16
10/26/64	50.29	852.87	04/19/65	49.00	854.16	10/18/65	50.39	852.77	04/19/66	49.99	853.17
11/02/64	50.24	852.92	04/26/65	49.57	853.59	10/25/65	50.36	852.80	04/25/66	49.98	853.18
11/16/64	50.26	852.90	05/03/65	49.97	853.19	11/01/65	50.32	852.84	05/02/66	49.98	853.18

139-048-17BAA
Undefined Aquifer

MP Elev (msl,ft)=903.6
Sl (ft.)=0-133

Date	Depth to Water (ft)	WL Elev (msl, ft)
07/17/40	34.25	869.35
07/19/40	34.28	869.32
07/24/40	34.36	869.24
07/31/40	34.38	869.22
08/03/40	34.44	869.16
08/10/40	34.53	869.07
08/17/40	34.60	869.00
08/24/40	34.72	868.88
08/31/40	34.85	868.75
09/07/40	34.92	868.68
09/14/40	34.95	868.65
09/21/40	35.02	868.58
09/28/40	35.07	868.53
10/05/40	35.11	868.49
10/12/40	35.08	868.52
10/19/40	34.97	868.63
10/26/40	35.00	868.60
11/02/40	34.98	868.62
11/09/40	33.91	869.69
11/16/40	34.84	868.76
11/23/40	34.73	868.87
11/30/40	34.83	868.77
12/07/40	34.85	868.75
12/14/40	34.85	868.75
12/21/40	34.91	868.69
12/28/40	34.93	868.67
01/05/41	34.76	868.84
01/11/41	34.68	868.92
01/18/41	34.66	868.94
01/26/41	34.68	868.92
02/01/41	34.68	868.92
02/08/41	34.69	868.91
02/16/41	34.65	868.95
02/22/41	34.64	868.96
03/01/41	34.65	868.95
03/09/41	34.67	868.93
03/15/41	34.63	868.97
03/23/41	34.44	869.16
03/29/41	34.63	868.97
04/05/41	34.59	869.01
04/12/41	34.57	869.03
04/20/41	34.55	869.05
04/27/41	34.55	869.05
05/03/41	34.58	869.02
05/10/41	34.59	869.01
05/17/41	34.61	868.99
05/24/41	34.64	868.96
05/31/41	34.71	868.89
06/07/41	34.72	868.88
06/15/41	34.64	868.96
06/22/41	34.71	868.89
06/29/41	34.64	868.96
07/06/41	34.65	868.95
07/13/41	34.67	868.93
07/19/41	34.68	868.92
07/26/41	34.63	868.97
08/03/41	34.77	868.83
08/09/41	34.83	868.77
08/16/41	34.84	868.76
08/23/41	34.86	868.74
08/30/41	34.89	868.71
09/06/41	34.89	868.71
09/13/41	34.90	868.70
09/20/41	34.89	868.71
09/28/41	34.87	868.73
10/04/41	34.87	868.73
10/11/41	34.88	868.72
10/18/41	34.87	868.73
10/25/41	34.78	868.82
11/02/41	34.77	868.83
11/08/41	34.78	868.82
11/15/41	34.68	868.92
11/22/41	34.77	868.83
11/30/41	34.63	868.97
12/06/41	34.71	868.89
12/13/41	34.73	868.87
12/20/41	34.74	868.86
12/28/41	34.70	868.90
01/04/42	34.72	868.88
01/10/42	34.74	868.86
01/17/42	34.59	869.01
01/25/42	34.63	868.97
01/31/42	34.61	868.99
02/07/42	34.69	868.91
02/15/42	34.71	868.89
02/21/42	34.73	868.87
02/28/42	34.76	868.84
03/07/42	34.94	868.66
03/14/42	34.84	868.76
03/21/42	34.93	868.67
03/28/42	34.87	868.73
04/05/42	34.86	868.74
04/11/42	34.85	868.75
04/18/42	34.94	868.66
04/25/42	34.84	868.76
05/02/42	34.87	868.73
05/09/42	34.79	868.81
05/17/42	34.79	868.81
05/23/42	34.79	868.81
05/31/42	34.79	868.81
06/07/42	34.77	868.83
06/14/42	34.74	868.86
06/21/42	34.74	868.86
06/27/42	34.73	868.87
07/04/42	34.76	868.84
07/12/42	34.78	868.82
07/19/42	34.78	868.82
07/26/42	34.79	868.81
08/02/42	34.84	868.76
08/08/42	34.87	868.73
08/16/42	34.88	868.72
08/23/42	34.87	868.73
08/30/42	34.87	868.73
09/05/42	34.86	868.74
09/13/42	34.87	868.73
09/20/42	34.85	868.75
09/27/42	34.84	868.76
10/04/42	34.84	868.76
10/11/42	34.84	868.76
10/17/42	34.86	868.74
10/25/42	34.80	868.80
11/12/42	34.32	869.28
11/21/42	34.84	868.76
11/28/42	34.40	869.20
12/05/42	34.91	868.69
12/12/42	34.88	868.72
12/19/42	34.87	868.73
12/26/42	34.83	868.77
01/02/43	34.88	868.72
01/09/43	34.84	868.76
01/23/43	34.64	868.96
01/30/43	34.66	868.94
02/06/43	34.67	868.93
02/13/43	34.67	868.93
02/20/43	34.63	868.97
02/27/43	34.71	868.89
03/06/43	34.58	869.02
03/13/43	34.61	868.99
03/20/43	34.59	869.01
03/27/43	34.58	869.02
04/02/43	34.57	869.03
04/10/43	34.60	869.00
04/17/43	34.55	869.05
04/24/43	34.64	868.96
05/01/43	34.64	868.96
05/08/43	34.65	868.95
05/15/43	34.66	868.94
05/22/43	34.69	868.91
05/29/43	34.68	868.92
06/05/43	34.63	868.97
06/12/43	34.65	868.95
06/21/43	34.61	868.99
06/26/43	34.62	868.98

139-048-18ABA MP Elev (msl,ft)=914.91

Undefined Aquifer SI (ft.)=0-0

Date	Depth to Water (ft)	WL Elev (msl, ft)
12/23/37	40.10	874.81
12/24/37	40.25	874.66
12/25/37	40.40	874.51
12/26/37	40.45	874.46
12/27/37	40.40	874.51
12/28/37	40.45	874.46
01/05/38	40.60	874.31
01/27/38	40.34	874.57
01/29/38	40.49	874.42
02/05/38	40.19	874.72
02/12/38	40.16	874.75
02/19/38	40.14	874.77
02/26/38	40.11	874.80
03/05/38	40.04	874.87
03/12/38	39.95	874.96
03/19/38	39.94	874.97
03/26/38	39.99	874.92
04/02/38	40.04	874.87
04/09/38	40.09	874.82
04/16/38	40.09	874.82
04/23/38	40.09	874.82
04/30/38	39.97	874.94
05/07/38	39.94	874.97
05/14/38	39.87	875.04
05/21/38	39.89	875.02
05/28/38	39.89	875.02
06/04/38	39.89	875.02
06/11/38	39.97	874.94
06/25/38	40.19	874.72
07/09/38	40.24	874.67
07/16/38	40.44	874.47
07/23/38	40.59	874.32
07/30/38	40.69	874.22
08/06/38	40.94	873.97
08/13/38	41.04	873.87
08/20/38	41.14	873.77
08/27/38	41.14	873.77
09/03/38	41.44	873.47
09/10/38	41.39	873.52
09/17/38	41.54	873.37
09/24/38	41.74	873.17
10/01/38	41.79	873.12
10/08/38	41.89	873.02
10/15/38	41.79	873.12
10/29/38	41.74	873.17
11/05/38	41.64	873.27
11/12/38	41.54	873.37
11/19/38	41.54	873.37
11/26/38	41.54	873.37
12/03/38	41.39	873.52
12/10/38	41.34	873.57
12/17/38	41.34	873.57
12/24/38	41.34	873.57
12/31/38	41.34	873.57
01/07/39	41.24	873.67
01/14/39	41.09	873.82
02/04/39	40.99	873.92
03/04/39	40.84	874.07
04/01/39	40.44	874.47
04/29/39	40.99	873.92
06/03/39	41.14	873.77
07/08/39	41.47	873.44
07/29/39	41.89	873.02
09/01/39	42.54	872.37
09/30/39	42.94	871.97
11/04/39	42.64	872.27
12/02/39	42.54	872.37
12/30/39	42.44	872.47
01/27/40	42.39	872.52
03/30/40	42.04	872.87
04/27/40	42.19	872.72
06/06/40	42.27	872.64
06/29/40	42.54	872.37
07/10/40	42.71	872.20
07/11/40	42.74	872.17
07/12/40	42.78	872.13
07/13/40	42.75	872.16
07/15/40	42.79	872.12
07/16/40	42.79	872.12
07/17/40	42.63	872.28
07/18/40	42.68	872.23
07/20/40	42.77	872.14
07/22/40	42.80	872.11
07/24/40	42.85	872.06
07/26/40	42.93	871.98
07/27/40	42.95	871.96
07/29/40	42.94	871.97
07/31/40	42.96	871.95
08/06/40	43.02	871.89
08/07/40	43.04	871.87
08/08/40	43.09	871.82
08/09/40	43.10	871.81
08/10/40	43.17	871.74
08/11/40	43.20	871.71
08/12/40	43.22	871.69
08/13/40	43.24	871.67
08/14/40	43.24	871.67
08/15/40	43.25	871.66
08/16/40	43.32	871.59
08/17/40	43.33	871.58
08/18/40	43.35	871.56
08/19/40	43.35	871.56
08/20/40	43.34	871.57
08/21/40	43.37	871.54
08/22/40	43.39	871.52
08/23/40	43.40	871.51
08/24/40	43.35	871.56
08/25/40	43.34	871.57
08/26/40	43.34	871.57
08/27/40	43.35	871.56
08/28/40	43.35	871.56
08/29/40	43.35	871.56
08/30/40	43.36	871.55
08/31/40	43.39	871.52
09/01/40	43.39	871.52
09/02/40	43.41	871.50
09/03/40	43.44	871.47
09/04/40	43.45	871.46
09/05/40	43.49	871.42
09/06/40	43.50	871.41
09/07/40	43.55	871.36
09/08/40	43.56	871.35
09/09/40	43.55	871.36
09/10/40	43.57	871.34
09/11/40	43.56	871.35
09/12/40	43.55	871.36
09/13/40	43.59	871.32
09/14/40	43.59	871.32
09/15/40	43.59	871.32
09/16/40	43.59	871.32
09/17/40	43.62	871.29
09/18/40	43.62	871.29
09/19/40	43.66	871.25
09/20/40	43.70	871.21
09/21/40	43.74	871.17
09/22/40	43.74	871.17
09/23/40	43.71	871.20
09/24/40	43.76	871.15
09/25/40	43.77	871.14
09/26/40	43.73	871.18
09/27/40	43.67	871.24
09/28/40	43.73	871.18
09/29/40	43.74	871.17
09/30/40	43.73	871.18
10/01/40	43.70	871.21
10/02/40	43.68	871.23
10/03/40	43.65	871.26
10/04/40	43.58	871.33
10/05/40	43.64	871.27
10/06/40	43.66	871.25
10/07/40	43.62	871.29
10/08/40	43.63	871.28
10/09/40	43.60	871.31
10/10/40	43.61	871.30
10/11/40	43.59	871.32
10/12/40	43.59	871.32
10/13/40	43.59	871.32
10/14/40	43.55	871.36
10/15/40	43.55	871.36
10/16/40	43.53	871.38
10/17/40	43.54	871.37
10/18/40	43.51	871.40
10/19/40	43.48	871.43
10/20/40	43.49	871.42
10/21/40	43.49	871.42
10/22/40	43.48	871.43
10/23/40	43.48	871.43
10/24/40	43.47	871.44
10/25/40	43.46	871.45
10/26/40	43.45	871.46
10/27/40	43.45	871.46
10/28/40	43.41	871.50
10/29/40	43.37	871.54
10/30/40	43.37	871.54
10/31/40	43.37	871.54
11/01/40	43.32	871.59
11/02/40	43.32	871.59
11/03/40	43.32	871.59
11/04/40	43.30	871.61
11/05/40	43.33	871.58
11/06/40	43.33	871.58
11/07/40	43.32	871.59
11/08/40	43.30	871.61
11/09/40	43.26	871.65
11/10/40	43.22	871.69
11/11/40	43.20	871.71
11/12/40	43.24	871.67
11/13/40	43.27	871.64
11/14/40	43.27	871.64
11/15/40	43.21	871.70
11/16/40	43.16	871.75
11/17/40	43.18	871.73
11/18/40	43.18	871.73
11/19/40	43.22	871.69
11/20/40	43.22	871.69
11/21/40	43.18	871.73
11/22/40	43.23	871.68
11/23/40	43.23	871.68
11/24/40	43.23	871.68
11/25/40	43.23	871.68
11/26/40	43.18	871.73
11/27/40	43.19	871.72
11/28/40	43.18	871.73
11/29/40	43.12	871.79
11/30/40	43.15	871.76
12/01/40	43.16	871.75
12/02/40	43.17	871.74
12/03/40	43.17	871.74
12/04/40	43.09	871.82
12/05/40	43.09	871.82
12/06/40	43.05	871.86
12/07/40	43.06	871.85
12/08/40	43.05	871.86
12/09/40	43.06	871.85
12/10/40	43.09	871.82
12/11/40	43.10	871.81
12/12/40	43.15	871.76
12/13/40	43.15	871.76
12/14/40	43.11	871.80
12/15/40	43.08	871.83
12/16/40	43.08	871.83
12/17/40	43.08	871.83
12/18/40	43.04	871.87
12/19/40	43.00	871.91
12/20/40	43.02	871.89
12/21/40	43.00	871.91
12/24/40	42.95	871.96
12/25/40	43.00	871.91
12/26/40	43.02	871.89
12/27/40	43.02	871.89
12/28/40	42.96	871.95
12/29/40	42.98	871.93
12/30/40	42.99	871.92
12/31/40	43.00	871.91
01/01/41	43.00	871.91
01/02/41	42.94	871.97
01/03/41	42.93	871.98
01/04/41	42.95	871.96
01/05/41	42.96	871.95
01/06/41	42.96	871.95
01/07/41	42.92	871.99
01/08/41	42.96	871.95
01/09/41	42.96	871.95
01/10/41	42.90	872.01
01/11/41	42.88	872.03
01/12/41	42.90	872.01
01/13/41	42.90	872.01
01/14/41	42.89	872.02
01/15/41	42.83	872.08
01/16/41	42.83	872.08
01/17/41	42.87	872.04
01/18/41	42.87	872.04
01/19/41	42.84	872.07
01/20/41	42.84	872.07
01/21/41	42.84	872.07
01/22/41	42.85	872.06
01/23/41	42.85	872.06
01/24/41	42.84	872.07
01/25/41	42.85	872.06
01/26/41	42.83	872.08
01/27/41	42.86	872.05
01/28/41	42.82	872.09
01/29/41	42.80	872.11
01/30/41	42.77	872.14
01/31/41	42.76	872.15
02/01/41	42.80	872.11
02/02/41	42.82	872.09
02/03/41	42.82	872.09
02/04/41	42.78	872.13
02/05/41	42.74	872.17
02/06/41	42.77	872.14
02/07/41	42.76	872.15
02/08/41	42.75	872.16
02/09/41	42.75	872.16
02/10/41	42.75	872.16
02/11/41	42.75	872.16
02/12/41	42.70	872.21
02/13/41	42.74	872.17
02/14/41	42.74	872.17
02/15/41	42.74	872.17
02/16/41	42.70	872.21
02/17/41	42.75	872.16
02/18/41	42.78	872.13
02/19/41	42.79	872.12
02/20/41	42.79	872.12
02/21/41	42.77	872.14
02/22/41	42.79	872.12
02/23/41	42.78	872.13
02/24/41	42.77	872.14
02/25/41	42.77	872.14
02/26/41	42.76	872.15
02/27/41	42.76	872.15
02/28/41	42.75	872.16
03/01/41	42.69	872.22
03/02/41	42.69	872.22
03/03/41	42.75	872.16
03/04/41	42.75	872.16
03/05/41	42.73	872.18
03/06/41	42.74	872.17
03/07/41	42.74	872.17
03/08/41	42.69	872.22
03/09/41	42.69	872.22
03/10/41	42.70	872.21
03/11/41	42.74	872.17
03/12/41	42.77	872.14
03/13/41	42.77	872.14
03/14/41	42.75	872.16
03/15/41	42.63	872.28
03/16/41	42.70	872.21
03/17/41	42.72	872.19
03/18/41	42.69	872.22
03/19/41	42.66	872.25
03/20/41	42.72	872.19
03/21/41	42.72	872.19
03/22/41	42.70	872.21
03/23/41	42.71	872.20

139-048-18ABA **(Continued)** MP Elev (msl,ft)=914.91

Undefined Aquifer SI (ft.)=0-0

Date	Depth to Water (ft)	WL Elev (msl. ft)
03/24/41	42.71	872.20
03/25/41	42.69	872.22
03/26/41	42.65	872.26
03/27/41	42.58	872.33
04/05/41	42.55	872.36
04/08/41	42.57	872.34
04/09/41	42.58	872.33
04/10/41	42.58	872.33
04/11/41	42.57	872.34
04/12/41	42.54	872.37
04/13/41	42.54	872.37
04/14/41	42.51	872.40
04/15/41	42.54	872.37
04/16/41	42.53	872.38
04/17/41	42.51	872.40
04/18/41	42.49	872.42
04/19/41	42.50	872.41
04/20/41	42.56	872.35
04/21/41	42.58	872.33
04/22/41	42.57	872.34
04/23/41	42.61	872.30
04/24/41	42.60	872.31
04/25/41	42.61	872.30
04/26/41	42.61	872.30
04/27/41	42.61	872.30
04/28/41	42.61	872.30
04/29/41	42.62	872.29
04/30/41	42.61	872.30
05/01/41	42.60	872.31
05/02/41	42.60	872.31
05/03/41	42.60	872.31
05/04/41	42.60	872.31
05/05/41	42.60	872.31
05/06/41	42.57	872.34
05/07/41	42.58	872.33
05/08/41	42.65	872.26
05/09/41	42.69	872.22
05/10/41	42.69	872.22
05/11/41	42.70	872.21
05/12/41	42.68	872.23
05/13/41	42.66	872.25
05/14/41	42.62	872.29
05/15/41	42.65	872.26
05/16/41	42.58	872.33
05/17/41	42.59	872.32
05/18/41	42.58	872.33
05/19/41	42.62	872.29
05/20/41	42.75	872.16
05/21/41	42.75	872.16
05/22/41	42.82	872.09
05/23/41	42.85	872.06
05/24/41	42.83	872.08
05/25/41	42.79	872.12
05/26/41	42.76	872.15
05/27/41	42.76	872.15
05/28/41	42.75	872.16
05/29/41	42.80	872.11
05/30/41	42.79	872.12
05/31/41	42.76	872.15
06/01/41	42.76	872.15
06/02/41	42.78	872.13
06/03/41	42.81	872.10
06/04/41	42.82	872.09
06/05/41	42.81	872.10
06/06/41	42.76	872.15
06/07/41	42.61	872.30
06/08/41	42.65	872.26
06/09/41	42.66	872.25
06/10/41	42.64	872.27
06/14/41	42.59	872.32
06/15/41	42.68	872.23
06/16/41	42.72	872.19
06/17/41	42.73	872.18
06/18/41	42.76	872.15
06/19/41	42.82	872.09
06/20/41	42.93	871.98
06/21/41	43.02	871.89
06/22/41	43.06	871.85
06/23/41	43.07	871.84
06/24/41	43.09	871.82
06/25/41	43.14	871.77
06/26/41	43.18	871.73
06/27/41	43.24	871.67
06/28/41	43.26	871.65
06/29/41	43.28	871.63
06/30/41	43.32	871.59
07/01/41	43.39	871.52
07/02/41	43.43	871.48
07/03/41	43.47	871.44
07/04/41	43.48	871.43
07/05/41	43.47	871.44
07/06/41	43.50	871.41
07/07/41	43.53	871.38
07/08/41	43.54	871.37
07/09/41	43.57	871.34
07/10/41	43.64	871.27
07/11/41	43.68	871.23
07/19/41	43.87	871.04
07/20/41	43.89	871.02
07/21/41	43.92	870.99
07/22/41	43.95	870.96
07/23/41	44.01	870.90
07/24/41	44.06	870.85
07/25/41	44.11	870.80
07/26/41	44.16	870.75
07/27/41	44.19	870.72
07/28/41	44.21	870.70
07/29/41	44.26	870.65
07/30/41	44.28	870.63
07/31/41	44.29	870.62
08/01/41	44.32	870.59
08/02/41	44.37	870.54
08/03/41	44.42	870.49
08/04/41	44.43	870.48
08/05/41	44.46	870.45
08/06/41	44.49	870.42
08/07/41	44.51	870.40
08/08/41	44.53	870.38
08/09/41	44.56	870.35
08/10/41	44.56	870.35
08/11/41	44.52	870.39
08/12/41	44.54	870.37
08/13/41	44.53	870.38
08/14/41	44.52	870.39
08/15/41	44.57	870.34
08/16/41	44.61	870.30
08/17/41	44.59	870.32
08/18/41	44.62	870.29
08/19/41	44.64	870.27
08/20/41	44.65	870.26
08/21/41	44.70	870.21
08/22/41	44.72	870.19
08/23/41	44.72	870.19
08/24/41	44.72	870.19
08/25/41	44.78	870.13
08/26/41	44.83	870.08
08/27/41	44.85	870.06
08/28/41	44.85	870.06
08/29/41	44.85	870.06
08/30/41	44.84	870.07
08/31/41	44.91	870.00
09/01/41	44.93	869.98
09/02/41	44.94	869.97
09/03/41	44.96	869.95
09/04/41	44.95	869.96
09/05/41	44.94	869.97
09/06/41	45.00	869.91
09/07/41	45.00	869.91
09/08/41	45.00	869.91
09/09/41	45.02	869.89
09/10/41	45.07	869.84
09/11/41	45.07	869.84
09/12/41	45.02	869.89
09/13/41	45.02	869.89
09/14/41	45.05	869.86
09/15/41	45.07	869.84
09/16/41	45.11	869.80
09/17/41	45.12	869.79
09/18/41	45.12	869.79
09/19/41	45.11	869.80
09/20/41	45.14	869.77
09/21/41	45.19	869.72
09/22/41	45.22	869.69
09/23/41	45.21	869.70
09/24/41	45.16	869.75
09/25/41	45.17	869.74
09/26/41	45.17	869.74
09/27/41	45.23	869.68
09/28/41	45.27	869.64
09/29/41	45.27	869.64
09/30/41	45.24	869.67
10/01/41	45.29	869.62
10/02/41	45.29	869.62
10/03/41	45.23	869.68
10/04/41	45.20	869.71
10/05/41	45.21	869.70
10/06/41	45.21	869.70
10/07/41	45.12	869.79
10/08/41	45.12	869.79
10/09/41	45.12	869.79
10/10/41	45.12	869.79
10/11/41	45.04	869.87
10/12/41	45.04	869.87
10/13/41	44.99	869.92
10/14/41	44.99	869.92
10/15/41	45.01	869.90
10/16/41	44.98	869.93
10/17/41	44.89	870.02
10/18/41	44.90	870.01
10/19/41	44.89	870.02
10/20/41	44.84	870.07
10/21/41	44.82	870.09
10/22/41	44.80	870.11
10/23/41	44.80	870.11
10/24/41	44.79	870.12
10/26/41	44.64	870.27
10/27/41	44.70	870.21
10/28/41	44.70	870.21
10/29/41	44.66	870.25
10/30/41	44.65	870.26
10/31/41	44.63	870.28
01/01/42	43.91	871.00
01/02/42	43.83	871.08
01/03/42	43.87	871.04
01/04/42	43.88	871.03
01/05/42	43.87	871.04
01/06/42	43.87	871.04
01/07/42	43.87	871.04
01/08/42	43.81	871.10
01/09/42	43.82	871.09
01/10/42	43.76	871.15
01/11/42	43.76	871.15
01/12/42	43.78	871.13
01/13/42	43.76	871.15
01/14/42	43.79	871.12
01/15/42	43.76	871.15
01/16/42	43.76	871.15
01/17/42	43.70	871.21
01/18/42	43.70	871.21
01/19/42	43.71	871.20
01/20/42	43.72	871.19
01/21/42	43.69	871.22
01/22/42	43.66	871.25
01/23/42	43.63	871.28
01/24/42	43.63	871.28
01/25/42	43.62	871.29
01/26/42	43.63	871.28
01/27/42	43.66	871.25
01/28/42	43.54	871.37
01/29/42	43.63	871.28
01/30/42	43.66	871.25
01/31/42	43.66	871.25
02/01/42	43.66	871.25
02/02/42	43.65	871.26
02/03/42	43.61	871.30
02/04/42	43.61	871.30
02/05/42	43.60	871.31
02/06/42	43.63	871.28
02/07/42	43.64	871.27
02/08/42	43.64	871.27
02/09/42	43.62	871.29
02/10/42	43.62	871.29
02/11/42	43.61	871.30
02/12/42	43.64	871.27
02/13/42	43.64	871.27
02/14/42	43.61	871.30
02/15/42	43.59	871.32
02/16/42	43.58	871.33
02/17/42	43.59	871.32
02/18/42	43.59	871.32
02/19/42	43.56	871.35
02/20/42	43.56	871.35
02/21/42	43.57	871.34
02/22/42	43.57	871.34
02/23/42	43.57	871.34
02/24/42	43.57	871.34
02/25/42	43.55	871.36
02/26/42	43.55	871.36
02/27/42	43.55	871.36
02/28/42	43.55	871.36
03/01/42	43.53	871.38
03/02/42	43.50	871.41
03/03/42	43.48	871.43
03/04/42	43.46	871.45
03/05/42	43.46	871.45
03/06/42	43.43	871.48
03/07/42	43.45	871.46
03/08/42	43.45	871.46
03/09/42	43.44	871.47
03/10/42	43.42	871.49
03/11/42	43.42	871.49
03/12/42	43.42	871.49
03/13/42	43.43	871.48
03/14/42	43.43	871.48
03/15/42	43.42	871.49
03/16/42	43.38	871.53
03/17/42	43.36	871.55
03/18/42	43.37	871.54
03/19/42	43.37	871.54
03/20/42	43.37	871.54
03/21/42	43.38	871.53
03/22/42	43.38	871.53
03/23/42	43.36	871.55
03/24/42	43.35	871.56
03/25/42	43.34	871.57
03/26/42	43.24	871.67
03/27/42	43.23	871.68
03/28/42	43.23	871.68
03/29/42	43.27	871.64
03/30/42	43.28	871.63
03/31/42	43.28	871.63
04/01/42	43.24	871.67
04/02/42	43.24	871.67
04/03/42	43.22	871.69
04/04/42	43.25	871.66
04/05/42	43.27	871.64
04/06/42	43.23	871.68
04/07/42	43.28	871.63
04/08/42	43.28	871.63
04/09/42	43.26	871.65
04/10/42	43.28	871.63
04/11/42	43.29	871.62
04/12/42	43.27	871.64
04/13/42	43.26	871.65
04/14/42	43.25	871.66
04/15/42	43.26	871.65
04/16/42	43.31	871.60
04/17/42	43.32	871.59
04/18/42	43.32	871.59
04/19/42	43.34	871.57
04/20/42	43.33	871.58
04/21/42	43.31	871.60
04/22/42	43.27	871.64
04/23/42	43.29	871.62
04/24/42	43.30	871.61
04/25/42	43.30	871.61
04/26/42	43.28	871.63
04/27/42	43.28	871.63
04/28/42	43.17	871.74

139-048-18ABA **(Continued)** MP Elev (msl,ft)=914.91

Undefined Aquifer SI (ft.)=0-0

Date	Depth to Water (ft)	WL Elev (msl, ft)	Date	Depth to Water (ft)	WL Elev (msl, ft)	Date	Depth to Water (ft)	WL Elev (msl, ft)	Date	Depth to Water (ft)	WL Elev (msl, ft)
04/29/42	43.19	871.72	07/18/42	43.19	871.72	10/07/42	43.40	871.51	12/29/42	43.18	871.73
04/30/42	43.04	871.87	07/19/42	43.21	871.70	10/08/42	43.44	871.47	12/30/42	43.18	871.73
05/01/42	42.94	871.97	07/20/42	43.25	871.66	10/09/42	43.44	871.47	12/31/42	43.13	871.78
05/02/42	42.92	871.99	07/21/42	43.26	871.65	10/10/42	43.42	871.49			
05/03/42	42.94	871.97	07/22/42	43.25	871.66	10/11/42	43.40	871.51	01/01/43	43.16	871.75
05/04/42	42.95	871.96	07/23/42	43.24	871.67	10/12/42	43.41	871.50	01/02/43	43.19	871.72
05/05/42	42.96	871.95	07/24/42	43.27	871.64	10/13/42	43.43	871.48	01/03/43	43.20	871.71
05/06/42	42.97	871.94	07/25/42	43.28	871.63	10/14/42	43.44	871.47	01/04/43	43.21	871.70
05/07/42	42.98	871.93	07/26/42	43.31	871.60	10/15/42	43.42	871.49	01/05/43	43.18	871.73
05/08/42	43.02	871.89	07/27/42	43.32	871.59	10/16/42	43.43	871.48	01/06/43	43.17	871.74
05/09/42	43.04	871.87	07/28/42	43.29	871.62	10/17/42	43.45	871.46	01/07/43	43.17	871.74
05/10/42	43.05	871.86	07/29/42	43.29	871.62	10/18/42	43.44	871.47	01/08/43	43.17	871.74
05/11/42	43.03	871.88	07/30/42	43.33	871.58	10/19/42	43.40	871.51	01/09/43	43.10	871.81
05/12/42	43.01	871.90	07/31/42	43.35	871.56	10/20/42	43.38	871.53	01/10/43	43.10	871.81
05/13/42	42.99	871.92	08/01/42	43.40	871.51	10/21/42	43.38	871.53	01/11/43	43.12	871.79
05/14/42	43.05	871.86	08/02/42	43.44	871.47	10/22/42	43.34	871.57	01/12/43	43.13	871.78
05/15/42	43.05	871.86	08/03/42	43.48	871.43	10/23/42	43.35	871.56	01/13/43	43.12	871.79
05/16/42	43.02	871.89	08/04/42	43.49	871.42	10/24/42	43.36	871.55	01/14/43	43.02	871.89
05/17/42	42.99	871.92	08/05/42	43.46	871.45	10/25/42	43.37	871.54	01/15/43	43.03	871.88
05/18/42	42.95	871.96	08/06/42	43.49	871.42	10/26/42	43.37	871.54	01/16/43	43.08	871.83
05/19/42	43.00	871.91	08/07/42	43.50	871.41	10/27/42	43.35	871.56	01/23/43	43.04	871.87
05/20/42	43.00	871.91	08/08/42	43.52	871.39	10/28/42	43.34	871.57	01/24/43	43.05	871.86
05/21/42	43.00	871.91	08/09/42	43.54	871.37	10/29/42	43.31	871.60	01/25/43	43.06	871.85
05/22/42	43.00	871.91	08/10/42	43.56	871.35	10/30/42	43.31	871.60	01/26/43	43.07	871.84
05/23/42	43.01	871.90	08/11/42	43.56	871.35	10/31/42	43.32	871.59	01/30/43	43.05	871.86
05/24/42	43.01	871.90	08/12/42	43.57	871.34	11/01/42	43.31	871.60	01/31/43	43.07	871.84
05/25/42	43.00	871.91	08/13/42	43.57	871.34	11/02/42	43.37	871.54	02/01/43	43.07	871.84
05/26/42	42.95	871.96	08/14/42	43.60	871.31	11/03/42	43.36	871.55	02/02/43	43.02	871.89
05/27/42	42.95	871.96	08/15/42	43.63	871.28	11/04/42	43.30	871.61	02/03/43	42.96	871.95
05/28/42	42.95	871.96	08/16/42	43.64	871.27	11/05/42	43.40	871.51	02/04/43	42.90	872.01
05/29/42	42.97	871.94	08/17/42	43.66	871.25	11/06/42	43.40	871.51	02/05/43	42.88	872.03
05/30/42	42.93	871.98	08/18/42	43.68	871.23	11/07/42	43.39	871.52	02/06/43	42.96	871.95
05/31/42	42.92	871.99	08/19/42	43.69	871.22	11/08/42	43.38	871.53	02/07/43	42.95	871.96
06/01/42	42.90	872.01	08/20/42	43.70	871.21	11/09/42	43.36	871.55	02/08/43	42.95	871.96
06/02/42	42.88	872.03	08/21/42	43.77	871.14	11/10/42	43.36	871.55	02/09/43	42.91	872.00
06/03/42	42.93	871.98	08/22/42	43.83	871.08	11/11/42	43.36	871.55	02/10/43	42.94	871.97
06/04/42	42.95	871.96	08/23/42	43.86	871.05	11/12/42	43.36	871.55	02/11/43	42.95	871.96
06/05/42	42.88	872.03	08/24/42	43.84	871.07	11/13/42	43.36	871.55	02/12/43	42.99	871.92
06/06/42	42.89	872.02	08/25/42	43.82	871.09	11/14/42	43.32	871.59	02/13/43	42.99	871.92
06/07/42	42.89	872.02	08/26/42	43.82	871.09	11/15/42	43.24	871.67	02/14/43	43.01	871.90
06/08/42	42.87	872.04	08/27/42	43.79	871.12	11/16/42	43.26	871.65	02/20/43	42.92	871.99
06/09/42	42.82	872.09	08/28/42	43.79	871.12	11/17/42	43.32	871.59	02/21/43	42.92	871.99
06/10/42	42.75	872.16	08/29/42	43.74	871.17	11/18/42	43.32	871.59	02/22/43	42.88	872.03
06/11/42	42.72	872.19	08/30/42	43.66	871.25	11/19/42	43.35	871.56	02/23/43	42.92	871.99
06/12/42	42.83	872.08	08/31/42	43.51	871.40	11/20/42	43.39	871.52	02/24/43	43.00	871.91
06/13/42	42.89	872.02	09/01/42	43.54	871.37	11/21/42	43.41	871.50	02/25/43	42.97	871.94
06/14/42	42.90	872.01	09/02/42	43.60	871.31	11/22/42	43.40	871.51	02/26/43	42.95	871.96
06/15/42	42.92	871.99	09/03/42	43.60	871.31	11/23/42	43.34	871.57	02/27/43	42.89	872.02
06/16/42	42.93	871.98	09/04/42	43.57	871.34	11/24/42	43.27	871.64	02/28/43	42.93	871.98
06/17/42	42.92	871.99	09/05/42	43.59	871.32	11/25/42	43.31	871.60	03/01/43	43.00	871.91
06/18/42	42.94	871.97	09/06/42	43.59	871.32	11/26/42	43.32	871.59	03/02/43	43.00	871.91
06/19/42	42.93	871.98	09/07/42	43.60	871.31	11/27/42	43.33	871.58	03/03/43	42.94	871.97
06/20/42	42.98	871.93	09/08/42	43.61	871.30	11/28/42	43.33	871.58	03/04/43	42.96	871.95
06/21/42	43.00	871.91	09/09/42	43.61	871.30	11/29/42	43.31	871.60	03/05/43	42.97	871.94
06/22/42	43.00	871.91	09/10/42	43.60	871.31	11/30/42	43.26	871.65	03/06/43	42.96	871.95
06/23/42	43.01	871.90	09/11/42	43.62	871.29	12/01/42	43.27	871.64	03/07/43	42.96	871.95
06/24/42	43.02	871.89	09/12/42	43.61	871.30	12/02/42	43.26	871.65	03/08/43	42.94	871.97
06/25/42	43.00	871.91	09/13/42	43.61	871.30	12/03/42	43.28	871.63	03/09/43	42.92	871.99
06/26/42	43.02	871.89	09/14/42	43.53	871.38	12/04/42	43.28	871.63	03/10/43	42.93	871.98
06/27/42	43.01	871.90	09/15/42	43.53	871.38	12/05/42	43.31	871.60	03/11/43	42.88	872.03
06/28/42	42.99	871.92	09/16/42	43.55	871.36	12/06/42	43.32	871.59	03/12/43	42.89	872.02
06/29/42	43.00	871.91	09/17/42	43.55	871.36	12/07/42	43.32	871.59	03/13/43	42.94	871.97
06/30/42	43.03	871.88	09/18/42	43.54	871.37	12/08/42	43.30	871.61	03/14/43	42.92	871.99
07/01/42	43.04	871.87	09/19/42	43.55	871.36	12/09/42	43.30	871.61	03/15/43	42.88	872.03
07/02/42	43.01	871.90	09/20/42	43.53	871.38	12/10/42	43.27	871.64	03/16/43	42.77	872.14
07/03/42	43.02	871.89	09/21/42	43.50	871.41	12/11/42	43.28	871.63	03/17/43	42.76	872.15
07/04/42	43.02	871.89	09/22/42	43.50	871.41	12/12/42	43.29	871.62	03/18/43	42.79	872.12
07/05/42	43.05	871.86	09/23/42	43.50	871.41	12/13/42	43.29	871.62	03/19/43	42.79	872.12
07/06/42	43.05	871.86	09/24/42	43.50	871.41	12/14/42	43.28	871.63	03/20/43	42.81	872.10
07/07/42	43.03	871.88	09/25/42	43.49	871.42	12/18/42	43.32	871.59	03/21/43	42.83	872.08
07/08/42	43.03	871.88	09/26/42	43.45	871.46	12/19/42	43.33	871.58	03/22/43	42.81	872.10
07/09/42	43.09	871.82	09/27/42	43.48	871.43	12/20/42	43.30	871.61	03/23/43	42.76	872.15
07/10/42	43.14	871.77	09/29/42	43.43	871.48	12/21/42	43.21	871.70	03/24/43	42.76	872.15
07/11/42	43.14	871.77	09/30/42	43.43	871.48	12/22/42	43.16	871.75	03/25/43	42.78	872.13
07/12/42	43.17	871.74	10/01/42	43.41	871.50	12/23/42	43.21	871.70	03/26/43	42.81	872.10
07/13/42	43.20	871.71	10/02/42	43.41	871.50	12/24/42	43.22	871.69	03/27/43	42.82	872.09
07/14/42	43.20	871.71	10/03/42	43.40	871.51	12/25/42	43.19	871.72	03/28/43	42.81	872.10
07/15/42	43.18	871.73	10/04/42	43.39	871.52	12/26/42	43.23	871.68	03/29/43	42.76	872.15
07/16/42	43.16	871.75	10/05/42	43.41	871.50	12/27/42	43.24	871.67	03/30/43	42.71	872.20
07/17/42	43.18	871.73	10/06/42	43.41	871.50	12/28/42	43.20	871.71	03/31/43	42.60	872.31

139-048-18ABA (Continued) MP Elev (msl,ft)=914.91

Undefined Aquifer SI (ft.)=0-0

Date	Depth to Water (ft)	WL Elev (msl, ft)	Date	Depth to Water (ft)	WL Elev (msl, ft)	Date	Depth to Water (ft)	WL Elev (msl, ft)	Date	Depth to Water (ft)	WL Elev (msl, ft)
04/01/43	42.35	872.56	06/23/43	42.81	872.10	09/14/43	43.20	871.71	12/03/43	43.12	871.79
04/02/43	42.03	872.88	06/24/43	42.86	872.05	09/15/43	43.23	871.68	12/04/43	43.14	871.77
04/03/43	41.70	873.21	06/25/43	42.79	872.12	09/16/43	43.26	871.65	12/05/43	43.14	871.77
04/04/43	41.00	873.91	06/26/43	42.79	872.12	09/17/43	43.25	871.66	12/06/43	43.14	871.77
04/05/43	40.69	874.22	06/27/43	42.78	872.13	09/18/43	43.20	871.71	12/07/43	43.09	871.82
04/06/43	40.37	874.54	06/28/43	42.74	872.17	09/19/43	43.23	871.68	12/08/43	43.13	871.78
04/07/43	40.19	874.72	06/29/43	42.72	872.19	09/20/43	43.24	871.67	12/09/43	43.16	871.75
04/08/43	40.36	874.55	06/30/43	42.67	872.24	09/21/43	43.21	871.70	12/10/43	43.16	871.75
04/09/43	40.62	874.29	07/01/43	42.55	872.36	09/22/43	43.26	871.65	12/11/43	43.14	871.77
04/10/43	40.88	874.03	07/02/43	42.46	872.45	09/23/43	43.26	871.65	12/12/43	43.16	871.75
04/11/43	41.14	873.77	07/03/43	42.50	872.41	09/24/43	43.25	871.66	12/13/43	43.16	871.75
04/12/43	41.49	873.42	07/04/43	42.60	872.31	09/25/43	43.25	871.66	12/14/43	43.23	871.68
04/13/43	41.87	873.04	07/05/43	42.74	872.17	09/26/43	43.22	871.69	12/15/43	43.23	871.68
04/14/43	42.16	872.75	07/06/43	42.78	872.13	09/27/43	43.23	871.68	12/16/43	43.20	871.71
04/15/43	42.39	872.52	07/07/43	42.83	872.08	09/28/43	43.26	871.65	12/17/43	43.18	871.73
04/16/43	42.71	872.20	07/08/43	42.86	872.05	09/29/43	43.27	871.64	12/18/43	43.18	871.73
04/17/43	42.91	872.00	07/09/43	42.86	872.05	09/30/43	43.32	871.59	12/19/43	43.19	871.72
04/18/43	43.00	871.91	07/10/43	42.87	872.04	10/01/43	43.32	871.59	12/20/43	43.19	871.72
04/19/43	43.00	871.91	07/11/43	42.88	872.03	10/02/43	43.32	871.59	12/21/43	43.16	871.75
04/20/43	42.97	871.94	07/12/43	42.92	871.99	10/03/43	43.32	871.59	12/22/43	43.21	871.70
04/21/43	42.94	871.97	07/13/43	42.96	871.95	10/04/43	43.33	871.58	12/23/43	43.22	871.69
04/22/43	42.95	871.96	07/14/43	42.94	871.97	10/05/43	43.36	871.55	12/24/43	43.14	871.77
04/23/43	42.97	871.94	07/15/43	42.95	871.96	10/06/43	43.37	871.54	12/25/43	43.13	871.78
04/24/43	42.96	871.95	07/16/43	42.95	871.96	10/07/43	43.36	871.55	12/26/43	43.17	871.74
04/25/43	43.00	871.91	07/17/43	42.99	871.92	10/08/43	43.32	871.59	12/27/43	43.19	871.72
04/26/43	42.99	871.92	07/18/43	43.00	871.91	10/09/43	43.30	871.61	12/28/43	43.19	871.72
04/27/43	42.96	871.95	07/19/43	42.99	871.92	10/10/43	43.29	871.62	12/29/43	43.15	871.76
04/28/43	42.97	871.94	07/20/43	43.01	871.90	10/11/43	43.24	871.67	12/30/43	43.12	871.79
04/29/43	42.95	871.96	07/21/43	43.04	871.87	10/12/43	43.24	871.67	12/31/43	43.14	871.77
04/30/43	42.98	871.93	07/22/43	43.06	871.85	10/13/43	43.24	871.67			
05/01/43	42.97	871.94	07/23/43	43.08	871.83	10/14/43	43.28	871.63	01/01/44	43.13	871.78
05/02/43	42.92	871.99	07/24/43	43.13	871.78	10/15/43	43.29	871.62	01/02/44	43.12	871.79
05/03/43	42.94	871.97	07/25/43	43.16	871.75	10/16/43	43.27	871.64	01/03/44	43.14	871.77
05/04/43	42.93	871.98	07/26/43	43.18	871.73	10/17/43	43.22	871.69	01/04/44	43.18	871.73
05/05/43	42.87	872.04	07/27/43	43.18	871.73	10/18/43	43.21	871.70	01/05/44	43.18	871.73
05/06/43	42.95	871.96	07/28/43	43.17	871.74	10/19/43	43.18	871.73	01/06/44	43.21	871.70
05/07/43	42.97	871.94	07/29/43	43.20	871.71	10/20/43	43.19	871.72	01/07/44	43.22	871.69
05/08/43	42.99	871.92	07/30/43	43.21	871.70	10/21/43	43.21	871.70	01/08/44	43.21	871.70
05/09/43	42.98	871.93	07/31/43	43.21	871.70	10/22/43	43.22	871.69	01/09/44	43.13	871.78
05/10/43	42.98	871.93	08/01/43	43.20	871.71	10/23/43	43.23	871.68	01/10/44	43.12	871.79
05/11/43	43.00	871.91	08/02/43	43.23	871.68	10/24/43	43.26	871.65	01/11/44	43.18	871.73
05/12/43	43.01	871.90	08/03/43	43.22	871.69	10/25/43	43.27	871.64	01/12/44	43.21	871.70
05/13/43	43.01	871.90	08/04/43	43.23	871.68	10/26/43	43.25	871.66	01/13/44	43.20	871.71
05/14/43	43.00	871.91	08/05/43	43.27	871.64	10/27/43	43.23	871.68	01/14/44	43.14	871.77
05/15/43	42.99	871.92	08/06/43	43.27	871.64	10/28/43	43.17	871.74	01/15/44	43.16	871.75
05/16/43	42.94	871.97	08/07/43	43.30	871.61	10/29/43	43.20	871.71	01/16/44	43.17	871.74
05/17/43	42.96	871.95	08/08/43	43.30	871.61	10/30/43	43.20	871.71	01/17/44	43.17	871.74
05/19/43	42.94	871.97	08/09/43	43.00	871.91	10/31/43	43.18	871.73	01/18/44	43.12	871.79
05/20/43	42.95	871.96	08/10/43	43.03	871.88	11/01/43	43.14	871.77	01/19/44	43.17	871.74
05/21/43	42.96	871.95	08/11/43	43.01	871.90	11/02/43	43.17	871.74	01/20/44	43.16	871.75
05/22/43	42.95	871.96	08/12/43	42.98	871.93	11/03/43	43.17	871.74	01/21/44	43.15	871.76
05/23/43	42.93	871.98	08/13/43	42.97	871.94	11/04/43	43.14	871.77	01/22/44	43.18	871.73
05/24/43	42.84	872.07	08/14/43	43.00	871.91	11/05/43	43.14	871.77	01/23/44	43.18	871.73
05/25/43	42.78	872.13	08/18/43	43.13	871.78	11/06/43	43.19	871.72	01/24/44	43.10	871.81
05/26/43	42.80	872.11	08/19/43	43.13	871.78	11/07/43	43.19	871.72	01/25/44	43.10	871.81
05/29/43	42.81	872.10	08/20/43	43.12	871.79	11/08/43	43.16	871.75	01/26/44	43.18	871.73
05/30/43	42.80	872.11	08/21/43	43.14	871.77	11/09/43	43.16	871.75	01/27/44	43.19	871.72
05/31/43	42.76	872.15	08/22/43	43.12	871.79	11/10/43	43.20	871.71	01/28/44	43.12	871.79
06/01/43	42.78	872.13	08/23/43	43.08	871.83	11/11/43	43.19	871.72	01/29/44	43.13	871.78
06/02/43	42.79	872.12	08/24/43	43.11	871.80	11/12/43	43.18	871.73	01/30/44	43.12	871.79
06/03/43	42.51	872.40	08/25/43	43.13	871.78	11/13/43	43.18	871.73	01/31/44	43.17	871.74
06/04/43	42.56	872.35	08/26/43	43.12	871.79	11/14/43	43.18	871.73	02/01/44	43.17	871.74
06/05/43	42.54	872.37	08/27/43	43.15	871.76	11/15/43	43.18	871.73	02/02/44	43.10	871.81
06/06/43	42.53	872.38	08/28/43	43.15	871.76	11/16/43	43.17	871.74	02/03/44	43.14	871.77
06/07/43	42.59	872.32	08/29/43	43.17	871.74	11/17/43	43.09	871.82	02/04/44	43.13	871.78
06/08/43	42.63	872.28	08/30/43	43.17	871.74	11/18/43	43.15	871.76	02/05/44	43.13	871.78
06/09/43	42.69	872.22	08/31/43	43.16	871.75	11/19/43	43.15	871.76	02/06/44	43.13	871.78
06/10/43	42.98	871.93	09/01/43	43.17	871.74	11/20/43	43.14	871.77	02/07/44	43.10	871.81
06/11/43	42.69	872.22	09/02/43	43.17	871.74	11/21/43	43.19	871.72	02/08/44	43.15	871.76
06/12/43	42.71	872.20	09/03/43	43.20	871.71	11/22/43	43.20	871.71	02/09/44	43.16	871.75
06/13/43	42.72	872.19	09/04/43	43.19	871.72	11/23/43	43.21	871.70	02/10/44	43.19	871.72
06/14/43	42.68	872.23	09/05/43	43.13	871.78	11/24/43	43.21	871.70	02/11/44	43.20	871.71
06/15/43	42.67	872.24	09/06/43	43.13	871.78	11/25/43	43.16	871.75	02/12/44	43.17	871.74
06/16/43	42.68	872.23	09/07/43	43.17	871.74	11/26/43	43.16	871.75	02/13/44	43.09	871.82
06/17/43	42.69	872.22	09/08/43	43.23	871.68	11/27/43	43.16	871.75	02/14/44	43.14	871.77
06/18/43	42.68	872.23	09/09/43	43.26	871.65	11/28/43	43.13	871.78	02/15/44	43.15	871.76
06/19/43	42.72	872.19	09/10/43	43.29	871.62	11/29/43	43.14	871.77	02/16/44	43.10	871.81
06/20/43	42.78	872.13	09/11/43	43.28	871.63	11/30/43	43.10	871.81	02/17/44	43.16	871.75
06/21/43	42.87	872.04	09/12/43	43.28	871.63	12/01/43	43.13	871.78	02/18/44	43.16	871.75
06/22/43	42.86	872.05	09/13/43	43.25	871.66	12/02/43	43.16	871.75	02/19/44	43.14	871.77

139-048-18ABA **(Continued)** MP Elev (msl,ft)=914.91

Undefined Aquifer SI (ft.)=0-0

Date	Depth to Water (ft)	WL Elev (msl. ft)	Date	Depth to Water (ft)	WL Elev (msl. ft)	Date	Depth to Water (ft)	WL Elev (msl. ft)	Date	Depth to Water (ft)	WL Elev (msl. ft)
02/20/44	43.11	871.80	05/14/44	43.02	871.89	08/07/44	43.06	871.85	11/02/44	43.36	871.55
02/21/44	43.10	871.81	05/15/44	43.02	871.89	08/08/44	43.11	871.80	11/03/44	43.39	871.52
02/22/44	43.12	871.79	05/16/44	42.97	871.94	08/09/44	43.10	871.81	11/04/44	43.40	871.51
02/23/44	43.09	871.82	05/17/44	42.99	871.92	08/10/44	43.11	871.80	11/05/44	43.38	871.53
02/24/44	43.10	871.81	05/18/44	43.00	871.91	08/11/44	43.25	871.66	11/06/44	43.33	871.58
02/25/44	43.10	871.81	05/19/44	43.00	871.91	08/12/44	43.25	871.66	11/07/44	43.30	871.61
02/26/44	43.12	871.79	05/20/44	42.99	871.92	08/13/44	43.30	871.61	11/08/44	43.26	871.65
02/27/44	43.16	871.75	05/21/44	42.96	871.95	08/14/44	43.32	871.59	11/09/44	43.29	871.62
02/28/44	43.16	871.75	05/22/44	42.93	871.98	08/15/44	43.30	871.61	11/10/44	43.30	871.61
02/29/44	43.17	871.74	05/23/44	42.97	871.94	08/16/44	43.26	871.65	11/11/44	43.28	871.63
03/01/44	43.17	871.74	05/24/44	43.00	871.91	08/17/44	43.28	871.63	11/12/44	43.30	871.61
03/02/44	43.14	871.77	05/25/44	43.01	871.90	08/18/44	43.28	871.63	11/13/44	43.29	871.62
03/03/44	43.16	871.75	05/26/44	43.06	871.85	08/19/44	43.25	871.66	11/14/44	43.26	871.65
03/04/44	43.16	871.75	05/27/44	43.08	871.83	08/20/44	43.29	871.62	11/15/44	43.31	871.60
03/05/44	43.12	871.79	05/28/44	43.08	871.83	08/21/44	43.31	871.60	11/16/44	43.32	871.59
03/06/44	43.03	871.88	05/29/44	43.07	871.84	08/22/44	43.34	871.57	11/17/44	43.33	871.58
03/07/44	43.09	871.82	05/30/44	43.08	871.83	08/23/44	43.35	871.56	11/18/44	43.33	871.58
03/08/44	43.14	871.77	05/31/44	43.10	871.81	08/24/44	43.35	871.56	11/19/44	43.33	871.58
03/09/44	43.15	871.76	06/01/44	43.10	871.81	08/25/44	43.34	871.57	11/20/44	43.32	871.59
03/10/44	43.05	871.86	06/02/44	43.11	871.80	08/26/44	43.32	871.59	11/21/44	43.33	871.58
03/11/44	43.10	871.81	06/05/44	43.00	871.91	08/27/44	43.28	871.63	11/22/44	43.29	871.62
03/12/44	43.15	871.76	06/06/44	43.00	871.91	08/28/44	43.26	871.65	11/23/44	43.28	871.63
03/13/44	43.15	871.76	06/07/44	42.91	872.00	08/29/44	43.24	871.67	11/24/44	43.28	871.63
03/14/44	43.15	871.76	06/08/44	42.82	872.09	08/30/44	43.22	871.69	11/25/44	43.29	871.62
03/15/44	43.13	871.78	06/09/44	42.78	872.13	08/31/44	43.20	871.71	11/26/44	43.27	871.64
03/16/44	43.08	871.83	06/10/44	42.80	872.11	09/08/44	43.20	871.71	11/27/44	43.28	871.63
03/17/44	43.12	871.79	06/11/44	42.91	872.00	09/09/44	43.20	871.71	11/28/44	43.29	871.62
03/18/44	43.17	871.74	06/12/44	43.01	871.90	09/10/44	43.20	871.71	11/29/44	43.33	871.58
03/19/44	43.15	871.76	06/16/44	43.14	871.77	09/11/44	43.23	871.68	11/30/44	43.37	871.54
03/20/44	43.11	871.80	06/17/44	43.15	871.76	09/12/44	43.25	871.66	12/01/44	43.37	871.54
03/21/44	43.14	871.77	06/18/44	43.17	871.74	09/13/44	43.25	871.66	12/02/44	43.34	871.57
03/22/44	43.14	871.77	06/19/44	43.18	871.73	09/14/44	43.22	871.69	12/03/44	43.31	871.60
03/23/44	43.07	871.84	06/20/44	43.17	871.74	09/15/44	43.23	871.68	12/04/44	43.32	871.59
03/24/44	43.08	871.83	06/21/44	43.17	871.74	09/16/44	43.22	871.69	12/05/44	43.31	871.60
03/25/44	43.10	871.81	06/22/44	43.18	871.73	09/17/44	43.20	871.71	12/06/44	43.26	871.65
03/26/44	43.10	871.81	06/23/44	43.16	871.75	09/18/44	43.26	871.65	12/07/44	43.25	871.66
03/27/44	43.10	871.81	06/24/44	43.16	871.75	09/19/44	43.27	871.64	12/08/44	43.28	871.63
03/28/44	43.10	871.81	06/25/44	43.15	871.76	09/20/44	43.25	871.66	12/09/44	43.30	871.61
03/29/44	43.06	871.85	06/26/44	43.16	871.75	09/21/44	43.30	871.61	12/10/44	43.31	871.60
03/30/44	43.04	871.87	06/27/44	43.21	871.70	09/22/44	43.31	871.60	12/11/44	43.30	871.61
03/31/44	43.04	871.87	06/28/44	43.31	871.60	09/23/44	43.32	871.59	12/12/44	43.28	871.63
04/01/44	43.10	871.81	06/29/44	43.33	871.58	09/24/44	43.31	871.60	12/13/44	43.28	871.63
04/02/44	43.13	871.78	06/30/44	43.34	871.57	09/25/44	43.29	871.62	12/14/44	43.26	871.65
04/03/44	43.13	871.78	07/01/44	43.33	871.58	09/26/44	43.29	871.62	12/15/44	43.26	871.65
04/04/44	43.12	871.79	07/02/44	43.35	871.56	09/27/44	43.30	871.61	12/16/44	43.26	871.65
04/05/44	43.13	871.78	07/03/44	43.35	871.56	09/28/44	43.31	871.60	12/17/44	43.27	871.64
04/06/44	43.07	871.84	07/04/44	43.30	871.61	09/29/44	43.28	871.63	12/18/44	43.26	871.65
04/07/44	43.06	871.85	07/05/44	43.20	871.71	09/30/44	43.32	871.59	12/19/44	43.26	871.65
04/08/44	43.03	871.88	07/06/44	42.98	871.93	10/01/44	43.36	871.55	12/20/44	43.29	871.62
04/09/44	43.05	871.86	07/07/44	42.95	871.96	10/02/44	43.35	871.56	12/21/44	43.30	871.61
04/10/44	43.07	871.84	07/08/44	42.98	871.93	10/03/44	43.31	871.60	12/22/44	43.29	871.62
04/11/44	43.05	871.86	07/09/44	42.97	871.94	10/04/44	43.26	871.65	12/23/44	43.29	871.62
04/12/44	43.04	871.87	07/10/44	42.97	871.94	10/05/44	43.24	871.67	12/24/44	43.28	871.63
04/13/44	43.03	871.88	07/11/44	42.97	871.94	10/06/44	43.29	871.62	12/25/44	43.31	871.60
04/14/44	43.01	871.90	07/12/44	43.05	871.86	10/07/44	43.34	871.57	12/26/44	43.31	871.60
04/15/44	43.07	871.84	07/13/44	43.10	871.81	10/08/44	43.35	871.56	12/27/44	43.31	871.60
04/16/44	43.11	871.80	07/14/44	43.17	871.74	10/09/44	43.35	871.56	12/28/44	43.31	871.60
04/17/44	43.13	871.78	07/15/44	43.21	871.70	10/10/44	43.34	871.57	12/29/44	43.24	871.67
04/18/44	43.15	871.76	07/16/44	43.22	871.69	10/11/44	43.33	871.58	12/30/44	43.26	871.65
04/19/44	43.15	871.76	07/17/44	43.21	871.70	10/12/44	43.29	871.62	12/31/44	43.28	871.63
04/20/44	43.15	871.76	07/18/44	43.25	871.66	10/13/44	43.32	871.59			
04/21/44	43.16	871.75	07/19/44	43.27	871.64	10/14/44	43.36	871.55	01/01/45	43.28	871.63
04/22/44	43.17	871.74	07/20/44	43.29	871.62	10/15/44	43.38	871.53	01/02/45	43.27	871.64
04/23/44	43.15	871.76	07/21/44	43.27	871.64	10/16/44	43.38	871.53	01/03/45	43.26	871.65
04/24/44	43.08	871.83	07/22/44	43.26	871.65	10/17/44	43.35	871.56	01/04/45	43.29	871.62
04/25/44	43.11	871.80	07/23/44	43.30	871.61	10/18/44	43.37	871.54	01/05/45	43.29	871.62
04/26/44	43.13	871.78	07/24/44	43.33	871.58	10/19/44	43.37	871.54	01/06/45	43.26	871.65
04/27/44	43.13	871.78	07/25/44	43.34	871.57	10/20/44	43.36	871.55	01/07/45	43.23	871.68
04/28/44	43.12	871.79	07/26/44	43.38	871.53	10/21/44	43.38	871.53	01/08/45	43.30	871.61
04/29/44	43.10	871.81	07/27/44	43.44	871.47	10/22/44	43.36	871.55	01/09/45	43.31	871.60
04/30/44	43.08	871.83	07/28/44	43.51	871.40	10/23/44	43.32	871.59	01/10/45	43.28	871.63
05/05/44	43.12	871.79	07/29/44	43.55	871.36	10/24/44	43.32	871.59	01/11/45	43.25	871.66
05/06/44	43.10	871.81	07/30/44	43.57	871.34	10/25/44	43.35	871.56	01/12/45	43.24	871.67
05/07/44	43.10	871.81	07/31/44	43.60	871.31	10/26/44	43.38	871.53	01/13/45	43.24	871.67
05/08/44	43.10	871.81	08/01/44	43.61	871.30	10/27/44	43.37	871.54	01/14/45	43.24	871.67
05/09/44	43.13	871.78	08/02/44	43.61	871.30	10/28/44	43.40	871.51	01/15/45	43.26	871.65
05/10/44	43.11	871.80	08/03/44	43.39	871.52	10/29/44	43.38	871.53	01/16/45	43.28	871.63
05/11/44	43.13	871.78	08/04/44	43.15	871.76	10/30/44	43.35	871.56	01/17/45	43.26	871.65
05/12/44	43.03	871.88	08/05/44	43.01	871.90	10/31/44	43.31	871.60	01/18/45	43.24	871.67
05/13/44	43.04	871.87	08/06/44	43.05	871.86	11/01/44	43.30	871.61	01/19/45	43.27	871.64

139-048-18ABA **(Continued)** MP Elev (msl,ft)=914.91

Undefined Aquifer SI (ft.)=0-0

Date	Depth to Water (ft)	WL Elev (msl. ft)
01/20/45	43.27	871.64
01/21/45	43.24	871.67
01/22/45	43.24	871.67
01/23/45	43.23	871.68
01/24/45	43.24	871.67
01/25/45	43.24	871.67
01/26/45	43.25	871.66
01/27/45	43.25	871.66
01/28/45	43.25	871.66
01/29/45	43.24	871.67
01/30/45	43.25	871.66
01/31/45	43.28	871.63
02/01/45	43.29	871.62
02/02/45	43.27	871.64
02/10/45	43.21	871.70
02/11/45	43.21	871.70
02/12/45	43.21	871.70
02/13/45	43.14	871.77
02/14/45	43.17	871.74
02/15/45	43.22	871.69
02/16/45	43.26	871.65
02/24/45	43.23	871.68
02/25/45	43.24	871.67
02/26/45	43.19	871.72
02/27/45	43.21	871.70
02/28/45	43.18	871.73
03/01/45	43.16	871.75
03/02/45	43.17	871.74
03/03/45	43.18	871.73
03/04/45	43.19	871.72
03/05/45	43.20	871.71
03/06/45	43.19	871.72
03/07/45	43.19	871.72
03/08/45	43.19	871.72
03/09/45	43.20	871.71
03/10/45	43.20	871.71
03/11/45	43.20	871.71
03/12/45	43.21	871.70
03/13/45	43.16	871.75
03/14/45	43.09	871.82
03/15/45	43.05	871.86
03/16/45	42.96	871.95
03/17/45	42.77	872.14
03/18/45	42.60	872.31
03/19/45	42.40	872.51
03/20/45	42.38	872.53
03/21/45	42.21	872.70
03/22/45	42.15	872.76
03/23/45	42.26	872.65
03/24/45	42.55	872.36
03/25/45	42.71	872.20
03/26/45	42.84	872.07
03/27/45	42.97	871.94
03/28/45	43.08	871.83
03/29/45	43.15	871.76
03/30/45	43.16	871.75
03/31/45	43.13	871.78
04/01/45	43.16	871.75
04/02/45	43.20	871.71
04/03/45	43.20	871.71
04/04/45	43.19	871.72
04/05/45	43.17	871.74
04/06/45	43.15	871.76
04/07/45	43.18	871.73
04/08/45	43.16	871.75
04/09/45	43.16	871.75
04/10/45	43.19	871.72
04/11/45	43.15	871.76
04/12/45	43.21	871.70
04/13/45	43.26	871.65
04/14/45	43.28	871.63
04/15/45	43.24	871.67
04/16/45	43.17	871.74
04/17/45	43.13	871.78
04/18/45	43.18	871.73
04/19/45	43.17	871.74
04/20/45	43.19	871.72
04/21/45	43.20	871.71
04/22/45	43.17	871.74
04/23/45	43.13	871.78
04/28/45	43.20	871.71
04/29/45	43.25	871.66
04/30/45	43.26	871.65
05/01/45	43.24	871.67
05/02/45	43.24	871.67
05/03/45	43.25	871.66
05/04/45	43.24	871.67
05/05/45	43.24	871.67
05/06/45	43.22	871.69
05/07/45	43.24	871.67
05/08/45	43.28	871.63
05/09/45	43.29	871.62
05/10/45	43.29	871.62
05/11/45	43.27	871.64
05/12/45	43.29	871.62
05/13/45	43.33	871.58
05/14/45	43.35	871.56
05/15/45	43.37	871.54
05/16/45	43.38	871.53
05/17/45	43.37	871.54
05/18/45	43.38	871.53
05/19/45	43.36	871.55
05/20/45	43.28	871.63
05/21/45	43.31	871.60
05/22/45	43.36	871.55
05/23/45	43.37	871.54
05/24/45	43.36	871.55
05/25/45	43.40	871.51
05/26/45	43.42	871.49
05/27/45	43.40	871.51
05/28/45	43.41	871.50
05/29/45	43.47	871.44
05/30/45	43.44	871.47
05/31/45	43.44	871.47
06/01/45	43.33	871.58
06/02/45	43.38	871.53
06/03/45	43.42	871.49
06/04/45	43.42	871.49
06/05/45	43.40	871.51
06/06/45	43.42	871.49
06/07/45	43.43	871.48
06/08/45	43.43	871.48
06/09/45	43.41	871.50
06/10/45	43.41	871.50
06/11/45	43.44	871.47
06/12/45	43.45	871.46
06/13/45	43.45	871.46
06/14/45	43.48	871.43
06/15/45	43.51	871.40
06/16/45	43.51	871.40
06/17/45	43.50	871.41
06/18/45	43.50	871.41
06/19/45	43.50	871.41
06/20/45	43.50	871.41
06/21/45	43.52	871.39
06/22/45	43.56	871.35
06/23/45	43.62	871.29
06/24/45	43.65	871.26
06/25/45	43.66	871.25
06/26/45	43.64	871.27
06/27/45	43.58	871.33
06/28/45	43.61	871.30
06/29/45	43.67	871.24
06/30/45	43.72	871.19
07/01/45	43.74	871.17
07/02/45	43.75	871.16
07/03/45	43.74	871.17
07/04/45	43.74	871.17
07/05/45	43.77	871.14
07/06/45	43.79	871.12
07/07/45	43.79	871.12
07/08/45	43.80	871.11
07/09/45	43.84	871.07
07/10/45	43.87	871.04
07/11/45	43.85	871.06
07/12/45	43.87	871.04
07/13/45	43.89	871.02
07/14/45	43.92	870.99
07/15/45	43.93	870.98
07/16/45	43.88	871.03
07/17/45	43.94	870.97
07/18/45	43.94	870.97
07/19/45	43.96	870.95
07/20/45	43.98	870.93
07/21/45	43.97	870.94
07/22/45	43.97	870.94
07/23/45	43.96	870.95
07/24/45	44.02	870.89
07/25/45	44.06	870.85
07/26/45	44.05	870.86
07/27/45	43.99	870.92
07/28/45	43.97	870.94
07/29/45	43.99	870.92
07/30/45	44.02	870.89
07/31/45	44.05	870.86
08/01/45	44.08	870.83
08/02/45	44.12	870.79
08/03/45	44.17	870.74
08/04/45	44.15	870.76
08/05/45	44.07	870.84
08/06/45	44.12	870.79
08/07/45	44.15	870.76
08/08/45	44.14	870.77
08/09/45	44.12	870.79
08/10/45	44.09	870.82
08/11/45	44.10	870.81
08/12/45	44.12	870.79
08/13/45	44.08	870.83
08/14/45	44.10	870.81
08/15/45	44.11	870.80
08/16/45	44.08	870.83
08/17/45	44.08	870.83
08/18/45	44.10	870.81
08/19/45	44.10	870.81
08/20/45	44.13	870.78
08/21/45	44.18	870.73
08/22/45	44.18	870.73
08/23/45	44.17	870.74
08/24/45	44.19	870.72
08/25/45	44.20	870.71
08/26/45	44.17	870.74
08/27/45	44.17	870.74
08/28/45	44.20	870.71
08/29/45	44.25	870.66
08/30/45	44.27	870.64
08/31/45	44.26	870.65
09/01/45	44.30	870.61
09/02/45	44.30	870.61
09/03/45	44.26	870.65
09/04/45	44.26	870.65
09/05/45	44.25	870.66
09/06/45	44.28	870.63
09/07/45	44.31	870.60
09/08/45	44.25	870.66
09/09/45	44.24	870.67
09/10/45	44.24	870.67
09/11/45	44.25	870.66
09/12/45	44.26	870.65
09/13/45	44.27	870.64
09/14/45	44.28	870.63
09/15/45	44.30	870.61
09/16/45	44.28	870.63
09/17/45	44.24	870.67
09/18/45	44.24	870.67
09/19/45	44.20	870.71
09/20/45	44.22	870.69
09/21/45	44.23	870.68
09/22/45	44.22	870.69
09/23/45	44.19	870.72
09/24/45	44.22	870.69
09/25/45	44.28	870.63
09/29/45	44.28	870.63
09/30/45	44.25	870.66
10/01/45	44.22	870.69
10/02/45	44.26	870.65
10/03/45	44.24	870.67
10/04/45	44.22	870.69
10/05/45	44.21	870.70
10/06/45	44.23	870.68
10/07/45	44.25	870.66
10/08/45	44.27	870.64
10/09/45	44.26	870.65
10/10/45	44.20	870.71
10/11/45	44.23	870.68
10/12/45	44.29	870.62
10/13/45	44.30	870.61
10/14/45	44.30	870.61
10/15/45	44.28	870.63
10/16/45	44.24	870.67
10/17/45	44.21	870.70
10/18/45	44.21	870.70
10/19/45	44.24	870.67
10/20/45	44.24	870.67
10/21/45	44.25	870.66
10/22/45	44.27	870.64
10/23/45	44.28	870.63
10/24/45	44.28	870.63
10/25/45	44.24	870.67
10/26/45	44.26	870.65
10/27/45	44.24	870.67
10/28/45	44.26	870.65
10/29/45	44.32	870.59
10/30/45	44.29	870.62
10/31/45	44.28	870.63
11/01/45	44.23	870.68
11/02/45	44.28	870.63
11/03/45	44.30	870.61
11/04/45	44.28	870.63
11/05/45	44.24	870.67
11/06/45	44.25	870.66
11/07/45	44.25	870.66
11/08/45	44.24	870.67
11/09/45	44.32	870.59
11/10/45	44.32	870.59
11/11/45	44.26	870.65
11/12/45	44.23	870.68
11/13/45	44.29	870.62
11/14/45	44.31	870.60
11/15/45	44.27	870.64
11/16/45	44.20	870.71
11/17/45	44.23	870.68
11/18/45	44.25	870.66
11/19/45	44.25	870.66
11/20/45	44.24	870.67
11/21/45	44.25	870.66
11/22/45	44.26	870.65
11/23/45	44.26	870.65
11/24/45	44.23	870.68
11/25/45	44.23	870.68
11/26/45	44.21	870.70
11/27/45	44.23	870.68
11/28/45	44.23	870.68
11/29/45	44.23	870.68
11/30/45	44.21	870.70
12/01/45	44.24	870.67
12/02/45	44.25	870.66
12/03/45	44.26	870.65
12/04/45	44.26	870.65
12/05/45	44.19	870.72
12/06/45	44.15	870.76
12/07/45	44.15	870.76
12/08/45	44.21	870.70
12/09/45	44.25	870.66
12/10/45	44.26	870.65
12/11/45	44.27	870.64
12/12/45	44.26	870.65
12/13/45	44.21	870.70
12/14/45	44.27	870.64
12/15/45	44.27	870.64
12/16/45	44.30	870.61
12/17/45	44.31	870.60
12/18/45	44.32	870.59
12/19/45	44.28	870.63
12/20/45	44.28	870.63
12/21/45	44.32	870.59
12/22/45	44.33	870.58
12/23/45	44.31	870.60
12/24/45	44.21	870.70
12/25/45	44.19	870.72
12/26/45	44.20	870.71

139-048-18ABA **(Continued)** MP Elev (msl,ft)=914.91

Undefined Aquifer SI (ft.)=0-0

Date	Depth to Water (ft)	WL Elev (msl. ft)
12/27/45	44.20	870.71
12/28/45	44.17	870.74
12/29/45	44.15	870.76
12/30/45	44.20	870.71
12/31/45	44.22	870.69
01/04/46	44.12	870.79
01/05/46	44.11	870.80
01/06/46	44.18	870.73
01/07/46	44.20	870.71
01/08/46	44.18	870.73
01/09/46	44.19	870.72
01/10/46	44.18	870.73
01/11/46	44.23	870.68
01/12/46	44.25	870.66
01/13/46	44.25	870.66
01/18/46	44.23	870.68
01/19/46	44.23	870.68
01/20/46	44.20	870.71
01/21/46	44.22	870.69
01/22/46	44.20	870.71
01/23/46	44.19	870.72
01/24/46	44.19	870.72
01/25/46	44.22	870.69
01/26/46	44.22	870.69
01/27/46	44.16	870.75
01/28/46	44.19	870.72
01/29/46	44.18	870.73
01/30/46	44.16	870.75
01/31/46	44.17	870.74
02/01/46	44.21	870.70
02/02/46	44.23	870.68
02/03/46	44.23	870.68
02/04/46	44.17	870.74
02/05/46	44.14	870.77
02/06/46	43.99	870.92
02/07/46	44.00	870.91
02/08/46	44.04	870.87
02/09/46	44.03	870.88
02/10/46	44.02	870.89
02/11/46	44.04	870.87
02/12/46	44.02	870.89
02/13/46	44.02	870.89
02/14/46	44.03	870.88
02/15/46	44.03	870.88
02/16/46	44.02	870.89
02/17/46	44.04	870.87
02/18/46	44.04	870.87
02/19/46	44.03	870.88
02/20/46	44.04	870.87
02/21/46	43.99	870.92
02/22/46	44.04	870.87
02/23/46	44.04	870.87
02/24/46	44.04	870.87
02/25/46	43.98	870.93
02/26/46	44.01	870.90
02/27/46	44.01	870.90
02/28/46	43.97	870.94
03/01/46	43.96	870.95
03/02/46	43.98	870.93
03/03/46	44.00	870.91
03/04/46	44.03	870.88
03/05/46	44.01	870.90
03/06/46	43.95	870.96
03/07/46	44.03	870.88
03/08/46	44.03	870.88
03/09/46	44.02	870.89
03/10/46	44.03	870.88
03/11/46	43.99	870.92
03/12/46	43.92	870.99
03/13/46	43.97	870.94
03/14/46	43.98	870.93
03/15/46	43.99	870.92
03/16/46	44.00	870.91
03/17/46	44.02	870.89
03/18/46	44.04	870.87
03/19/46	44.03	870.88
03/20/46	43.98	870.93
03/21/46	43.92	870.99
03/22/46	43.84	871.07
03/23/46	43.76	871.15
03/24/46	43.64	871.27
03/25/46	43.48	871.43
03/26/46	43.38	871.53
03/27/46	43.35	871.56
03/28/46	43.52	871.39
03/29/46	43.89	871.02
03/30/46	44.00	870.91
03/31/46	44.00	870.91
04/01/46	43.95	870.96
04/02/46	44.04	870.87
04/03/46	44.05	870.86
04/04/46	43.96	870.95
04/05/46	43.97	870.94
04/06/46	43.97	870.94
04/07/46	43.93	870.98
04/08/46	43.96	870.95
04/09/46	43.97	870.94
04/10/46	43.97	870.94
04/11/46	43.98	870.93
04/12/46	43.98	870.93
04/13/46	43.96	870.95
04/14/46	43.99	870.92
04/15/46	44.05	870.86
04/16/46	44.04	870.87
04/17/46	44.05	870.86
04/18/46	44.08	870.83
04/19/46	44.11	870.80
04/20/46	44.10	870.81
04/21/46	44.12	870.79
04/22/46	44.12	870.79
04/23/46	44.12	870.79
04/24/46	44.13	870.78
04/25/46	44.17	870.74
04/26/46	44.19	870.72
04/27/46	44.17	870.74
04/28/46	44.17	870.74
04/29/46	44.20	870.71
04/30/46	44.22	870.69
05/01/46	44.27	870.64
05/02/46	44.29	870.62
05/03/46	44.30	870.61
05/04/46	44.28	870.63
05/05/46	44.27	870.64
05/06/46	44.29	870.62
05/07/46	44.29	870.62
05/08/46	44.27	870.64
05/09/46	44.27	870.64
05/10/46	44.30	870.61
05/11/46	44.29	870.62
05/12/46	44.28	870.63
05/13/46	44.26	870.65
05/14/46	44.29	870.62
05/15/46	44.32	870.59
05/16/46	44.33	870.58
05/17/46	44.32	870.59
05/18/46	44.28	870.63
05/19/46	44.30	870.61
05/20/46	44.30	870.61
05/21/46	44.30	870.61
05/22/46	44.30	870.61
05/23/46	44.30	870.61
05/24/46	44.33	870.58
05/25/46	44.36	870.55
05/26/46	44.37	870.54
05/27/46	44.39	870.52
05/28/46	44.40	870.51
05/29/46	44.41	870.50
05/30/46	44.40	870.51
05/31/46	44.37	870.54
06/01/46	44.40	870.51
06/02/46	44.40	870.51
06/03/46	44.41	870.50
06/14/46	44.46	870.45
06/15/46	44.45	870.46
06/16/46	44.50	870.41
06/17/46	44.52	870.39
06/18/46	44.54	870.37
06/19/46	44.53	870.38
06/20/46	44.46	870.45
06/21/46	44.44	870.47
06/22/46	44.45	870.46
06/23/46	44.44	870.47
06/24/46	44.44	870.47
06/25/46	44.44	870.47
06/26/46	44.48	870.43
06/27/46	44.45	870.46
06/28/46	44.42	870.49
06/29/46	44.42	870.49
06/30/46	44.44	870.47
07/01/46	44.46	870.45
07/02/46	44.46	870.45
07/03/46	44.45	870.46
07/04/46	44.44	870.47
07/05/46	44.46	870.45
07/19/46	44.60	870.31
07/20/46	44.61	870.30
07/21/46	44.62	870.29
07/22/46	44.62	870.29
07/23/46	44.65	870.26
07/24/46	44.68	870.23
07/25/46	44.71	870.20
07/26/46	44.72	870.19
07/27/46	44.72	870.19
07/28/46	44.75	870.16
07/29/46	44.77	870.14
07/30/46	44.79	870.12
07/31/46	44.79	870.12
08/01/46	44.80	870.11
08/02/46	44.82	870.09
08/03/46	44.89	870.02
08/04/46	44.88	870.03
08/16/46	45.16	869.75
08/17/46	45.18	869.73
08/18/46	45.22	869.69
08/19/46	45.24	869.67
08/20/46	45.29	869.62
08/21/46	45.35	869.56
08/22/46	45.40	869.51
08/23/46	45.43	869.48
08/24/46	45.39	869.52
08/25/46	45.46	869.45
08/26/46	45.48	869.43
08/27/46	45.48	869.43
08/28/46	45.49	869.42
08/29/46	45.51	869.40
08/30/46	45.52	869.39
08/31/46	45.57	869.34
09/01/46	45.59	869.32
09/02/46	45.61	869.30
09/03/46	45.61	869.30
09/04/46	45.58	869.33
09/05/46	45.58	869.33
09/06/46	45.68	869.23
09/07/46	45.69	869.22
09/08/46	45.67	869.24
09/09/46	45.65	869.26
09/10/46	45.55	869.36
09/11/46	45.57	869.34
09/12/46	45.58	869.33
09/13/46	45.56	869.35
09/14/46	45.53	869.38
09/15/46	45.54	869.37
09/16/46	45.55	869.36
09/17/46	45.54	869.37
09/18/46	45.55	869.36
09/19/46	45.45	869.46
09/20/46	45.40	869.51
12/13/46	45.09	869.82
12/14/46	45.09	869.82
12/15/46	45.08	869.83
12/16/46	45.02	869.89
12/17/46	45.04	869.87
12/18/46	45.04	869.87
12/19/46	45.03	869.88
12/20/46	44.98	869.93
12/21/46	45.03	869.88
12/22/46	45.03	869.88
12/23/46	45.00	869.91
12/24/46	45.02	869.89
12/25/46	45.03	869.88
12/26/46	45.04	869.87
12/27/46	44.99	869.92
12/28/46	45.03	869.88
12/29/46	45.04	869.87
12/30/46	45.07	869.84
12/31/46	45.07	869.84
01/01/47	45.06	869.85
01/02/47	45.09	869.82
01/03/47	45.09	869.82
01/04/47	45.04	869.87
01/05/47	45.01	869.90
01/06/47	44.98	869.93
01/07/47	44.97	869.94
01/08/47	45.01	869.90
01/09/47	45.03	869.88
01/10/47	44.93	869.98
01/11/47	44.98	869.93
01/12/47	44.98	869.93
01/13/47	44.92	869.99
01/14/47	44.93	869.98
01/15/47	44.96	869.95
01/16/47	44.95	869.96
01/17/47	44.99	869.92
01/18/47	44.99	869.92
01/19/47	44.90	870.01
01/20/47	44.97	869.94
01/21/47	44.98	869.93
01/22/47	44.97	869.94
01/23/47	44.91	870.00
01/24/47	44.86	870.05
01/25/47	44.84	870.07
01/26/47	44.84	870.07
01/27/47	44.92	869.99
01/28/47	44.92	869.99
01/29/47	44.92	869.99
01/30/47	44.90	870.01
01/31/47	44.93	869.98
02/01/47	44.95	869.96
02/02/47	44.95	869.96
02/03/47	44.93	869.98
02/04/47	44.93	869.98
02/05/47	44.92	869.99
02/06/47	44.85	870.06
02/07/47	44.87	870.04
02/08/47	44.90	870.01
02/09/47	44.90	870.01
02/10/47	44.89	870.02
02/11/47	44.89	870.02
02/12/47	44.89	870.02
02/13/47	44.85	870.06
02/14/47	44.89	870.02
02/15/47	44.87	870.04
02/16/47	44.87	870.04
02/17/47	44.88	870.03
02/18/47	44.91	870.00
02/19/47	44.88	870.03
02/20/47	44.87	870.04
02/21/47	44.85	870.06
02/22/47	44.85	870.06
02/23/47	44.86	870.05
02/24/47	44.85	870.06
02/25/47	44.85	870.06
02/26/47	44.84	870.07
02/27/47	44.84	870.07
02/28/47	44.83	870.08
03/01/47	44.83	870.08
03/02/47	44.82	870.09
03/03/47	44.80	870.11
03/04/47	44.84	870.07
03/05/47	44.85	870.06
03/06/47	44.86	870.05
03/07/47	44.86	870.05
03/08/47	44.84	870.07
03/09/47	44.84	870.07
03/10/47	44.84	870.07
03/11/47	44.80	870.11
03/12/47	44.83	870.08
03/13/47	44.83	870.08

139-048-18ABA (Continued) MP Elev (msl,ft)=914.91

Undefined Aquifer SI (ft.)=0-0

Date	Depth to Water (ft)	WL Elev (msl. ft)	Date	Depth to Water (ft)	WL Elev (msl. ft)	Date	Depth to Water (ft)	WL Elev (msl. ft)	Date	Depth to Water (ft)	WL Elev (msl. ft)
03/14/47	44.82	870.09	08/31/47	46.46	868.45	12/16/47	45.82	869.09	02/28/48	45.53	869.38
03/15/47	44.84	870.07	09/15/47	46.66	868.25	12/17/47	45.81	869.10	03/07/48	45.44	869.47
03/16/47	44.82	870.09	09/16/47	46.67	868.24	12/18/47	45.83	869.08	03/08/48	45.42	869.49
03/17/47	44.82	870.09	09/17/47	46.67	868.24	12/19/47	45.83	869.08	03/09/48	45.44	869.47
03/18/47	44.82	870.09	09/18/47	46.64	868.27	12/20/47	45.84	869.07	03/10/48	45.48	869.43
03/19/47	44.82	870.09	09/19/47	46.63	868.28	12/27/47	45.85	869.06	03/11/48	45.49	869.42
03/20/47	44.82	870.09	09/20/47	46.61	868.30	12/28/47	45.85	869.06	03/12/48	45.47	869.44
03/21/47	44.82	870.09	09/21/47	46.59	868.32	12/29/47	45.84	869.07	05/28/48	45.86	869.05
04/18/47	44.01	870.90	09/22/47	46.67	868.24	12/30/47	45.84	869.07	05/29/48	45.89	869.02
04/19/47	44.26	870.65	09/26/47	46.49	868.42	12/31/47	45.83	869.08	05/30/48	45.90	869.01
04/20/47	44.45	870.46	09/27/47	46.55	868.36				05/31/48	45.90	869.01
04/21/47	44.61	870.30	09/28/47	46.58	868.33	01/01/48	45.82	869.09	06/01/48	45.88	869.03
04/22/47	44.78	870.13	09/29/47	46.57	868.34	01/02/48	45.76	869.15	06/02/48	45.91	869.00
04/23/47	44.87	870.04	09/30/47	46.51	868.40	01/03/48	45.80	869.11	06/03/48	45.85	869.06
04/24/47	44.89	870.02	10/01/47	46.49	868.42	01/04/48	45.81	869.10	06/04/48	45.88	869.03
04/25/47	44.89	870.02	10/02/47	46.44	868.47	01/05/48	45.82	869.09	06/25/48	45.93	868.98
04/27/47	44.85	870.06	10/03/47	46.41	868.50	01/06/48	45.82	869.09	06/26/48	45.95	868.96
04/28/47	44.84	870.07	10/20/47	46.32	868.59	01/07/48	45.77	869.14	06/27/48	45.96	868.95
04/29/47	44.77	870.14	10/21/47	46.32	868.59	01/08/48	45.76	869.15	06/28/48	45.97	868.94
04/30/47	44.79	870.12	10/22/47	46.37	868.54	01/09/48	45.84	869.07	06/29/48	46.00	868.91
05/01/47	44.82	870.09	10/23/47	46.37	868.54	01/10/48	45.84	869.07	06/30/48	46.02	868.89
05/16/47	44.97	869.94	10/24/47	46.33	868.58	01/11/48	45.76	869.15	07/01/48	46.02	868.89
05/17/47	44.96	869.95	10/25/47	46.34	868.57	01/12/48	45.80	869.11	07/02/48	46.01	868.90
05/18/47	44.98	869.93	10/26/47	46.32	868.59	01/13/48	45.80	869.11	07/09/48	46.24	868.67
05/19/47	45.01	869.90	10/27/47	46.28	868.63	01/14/48	45.80	869.11	07/10/48	46.25	868.66
05/20/47	45.00	869.91	11/01/47	46.29	868.62	01/15/48	45.77	869.14	07/11/48	46.25	868.66
05/21/47	44.97	869.94	11/02/47	46.28	868.63	01/16/48	45.78	869.13	07/12/48	46.26	868.65
05/22/47	44.97	869.94	11/03/47	46.24	868.67	02/01/48	45.69	869.22	07/13/48	46.30	868.61
05/23/47	44.98	869.93	11/04/47	46.21	868.70	02/02/48	45.71	869.20	07/14/48	46.33	868.58
07/05/47	45.28	869.63	11/05/47	46.17	868.74	02/03/48	45.71	869.20	08/29/48	46.64	868.27
07/06/47	45.30	869.61	11/06/47	46 19	868.72	02/04/48	45.66	869.25	08/31/48	46.66	868.25
07/07/47	45.30	869.61	11/07/47	46 17	868.74	02/05/48	45.68	869.23	09/01/48	46.70	868.21
07/08/47	45.34	869.57	11/08/47	46 12	868.79	02/06/48	45.67	869.24	09/02/48	46.72	868.19
07/09/47	45.37	869.54	11/09/47	46 17	868.74	02/07/48	45.71	869.20	09/03/48	46.73	868.18
07/10/47	45.39	869.52	11/10/47	46 17	868.74	02/14/48	45.64	869.27	09/04/48	46.72	868.19
07/11/47	45.44	869.47	11/11/47	46 16	868.75	02/15/48	45.60	869.31	09/05/48	46.77	868.14
07/12/47	45.47	869.44	11/12/47	46 16	868.75	02/16/48	45.56	869.35	09/06/48	46.81	868.10
08/20/47	46.46	868.45	11/13/47	46 16	868.75	02/17/48	45.59	869.32	09/07/48	46.83	868.08
08/21/47	46.47	868.44	11/14/47	46 13	868.78	02/18/48	45.59	869.32	09/08/48	46.84	868.07
08/22/47	46.47	868.44	11/18/47	46 10	868.81	02/19/48	45.64	869.27	09/09/48	47.16	867.75
08/23/47	46.50	868.41	11/19/47	46.11	868.80	02/20/48	45.64	869.27	09/10/48	46.86	868.05
08/24/47	46.50	868.41	11/20/47	46.09	868.82	02/21/48	45.58	869.33	09/11/48	47.19	867.72
08/25/47	46.50	868.41	11/21/47	46.04	868.87	02/22/48	45.58	869.33	09/12/48	46.32	868.59
08/26/47	46.50	868.41	11/22/47	46.01	868.90	02/23/48	45.54	869.37	09/13/48	46.36	868.55
08/27/47	46.49	868.42	11/23/47	46.00	868.91	02/24/48	45.58	869.33	09/14/48	46.36	868.55
08/28/47	46.46	868.45	11/24/47	45.95	868.96	02/25/48	45.58	869.33	09/15/48	46.34	868.57
08/29/47	46.42	868.49	11/25/47	45.96	868.95	02/26/48	45.54	869.37	09/16/48	46.36	868.55
08/30/47	46.45	868.46	12/15/47	45.82	869.09	02/27/48	45.56	869.35	09/18/48	47.06	867.85

139-048-19BDA MP Elev (msl,ft)=907.5

Undefined Aquifer SI (ft.)=155-160

Date	Depth to Water (ft)	WL Elev (msl. ft)	Date	Depth to Water (ft)	WL Elev (msl. ft)	Date	Depth to Water (ft)	WL Elev (msl. ft)	Date	Depth to Water (ft)	WL Elev (msl. ft)
2/26/82	55.76	851.74									

139-049-01CAC MP Elev (msl,ft)=906.2

Fargo Aquifer SI (ft.)=0-0

Date	Depth to Water (ft)	WL Elev (msl. ft)	Date	Depth to Water (ft)	WL Elev (msl. ft)	Date	Depth to Water (ft)	WL Elev (msl. ft)	Date	Depth to Water (ft)	WL Elev (msl. ft)
8/27/82	141.80	764.40									

139-049-01CBD1 MP Elev (msl,ft)=906.39

Fargo Aquifer SI (ft.)=0-183

Date	Depth to Water (ft)	WL Elev (msl, ft)
08/21/37	24.81	881.58
08/28/37	24.68	881.71
09/04/37	24.67	881.72
09/11/37	24.53	881.86
09/18/37	24.46	881.93
09/25/37	24.51	881.88
10/02/37	24.46	881.93
10/09/37	24.42	881.97
10/16/37	24.43	881.96
10/23/37	24.36	882.03
10/30/37	24.48	881.91
11/06/37	24.36	882.03
11/13/37	24.29	882.10
11/20/37	24.40	881.99
11/27/37	24.26	882.13
12/04/37	24.55	881.84
12/19/37	24.51	881.88
01/05/38	49.75	856.64
01/08/38	45.31	861.08
01/12/38	41.74	864.65
01/15/38	39.64	866.75
01/19/38	37.49	868.90
01/22/38	36.23	870.16
01/26/38	34.91	871.48
01/29/38	34.03	872.36
02/02/38	33.03	873.36
02/05/38	32.42	873.97
02/09/38	31.76	874.63
02/12/38	31.21	875.18
02/16/38	30.62	875.77
02/19/38	30.25	876.14
02/23/38	29.81	876.58
02/26/38	29.44	876.95
03/02/38	29.11	877.28
03/05/38	28.91	877.48
03/09/38	28.62	877.77
03/12/38	28.31	878.08
03/19/38	27.86	878.53
03/26/38	27.58	878.81
04/02/38	27.24	879.15
04/09/38	26.96	879.43
04/16/38	26.66	879.73
04/23/38	26.44	879.95
04/30/38	26.15	880.24
05/07/38	25.95	880.44
05/14/38	25.69	880.70
05/21/38	25.54	880.85
05/28/38	25.39	881.00
06/04/38	25.29	881.10
06/11/38	25.25	881.14
06/25/38	25.16	881.23
07/09/38	31.72	874.67
07/16/38	35.00	871.39
07/23/38	46.00	860.39
07/30/38	50.18	856.21
08/06/38	55.40	850.99
08/13/38	57.77	848.62
08/20/38	60.42	845.97
08/27/38	62.23	844.16
09/03/38	66.85	839.54
09/10/38	68.49	837.90
09/19/38	70.71	835.68
09/24/38	71.40	834.99
10/01/38	66.83	839.56
10/08/38	52.31	854.08
10/15/38	46.42	859.97
10/29/38	48.52	857.87
11/05/38	41.52	864.87
11/12/38	39.05	867.34
11/19/38	37.36	869.03
11/26/38	36.18	870.21
12/03/38	34.97	871.42
12/10/38	34.17	872.22
12/17/38	33.44	872.95
12/24/38	32.79	873.60
12/31/38	32.23	874.16
01/07/39	31.76	874.63
01/14/39	31.26	875.13
01/21/39	30.82	875.57
01/28/39	30.45	875.94
02/04/39	30.09	876.30
02/18/39	29.48	876.91
03/04/39	29.04	877.35
03/18/39	28.67	877.72
04/01/39	28.33	878.06
04/15/39	28.11	878.28
04/29/39	27.95	878.44
05/13/39	27.81	878.58
05/27/39	27.68	878.71
06/10/39	27.58	878.81
06/24/39	27.51	878.88
07/08/39	27.62	878.77
07/15/39	37.62	868.77
07/22/39	47.25	859.14
07/29/39	52.28	854.11
08/05/39	55.94	850.45
08/12/39	58.44	847.95
08/19/39	60.65	845.74
08/26/39	62.07	844.32
09/02/39	63.60	842.79
09/11/39	63.69	842.70
09/18/39	65.70	840.69
09/23/39	66.88	839.51
09/30/39	67.33	839.06
10/07/39	52.16	854.23
10/14/39	46.71	859.68
10/21/39	43.46	862.93
10/28/39	41.29	865.10
11/04/39	39.72	866.67
11/18/39	37.54	868.85
11/25/39	36.77	869.62
12/02/39	35.97	870.42
12/16/39	34.78	871.61
12/23/39	34.35	872.04
12/30/39	33.90	872.49
01/06/40	33.57	872.82
01/13/40	33.15	873.24
01/20/40	32.88	873.51
01/27/40	32.57	873.82
02/03/40	32.29	874.10
02/10/40	31.98	874.41
02/17/40	31.90	874.49
02/24/40	31.68	874.71
03/02/40	31.40	874.99
03/09/40	31.20	875.19
03/16/40	30.99	875.40
03/23/40	30.91	875.48
03/30/40	30.61	875.78
04/06/40	30.51	875.88
04/13/40	30.40	875.99
04/20/40	30.35	876.04
04/27/40	30.25	876.14
05/04/40	30.14	876.25
05/11/40	30.10	876.29
05/18/40	29.95	876.44
05/25/40	29.92	876.47
06/01/40	29.88	876.51
06/08/40	29.79	876.60
06/15/40	29.82	876.57
06/22/40	29.79	876.60
06/29/40	29.81	876.58
07/06/40	29.80	876.59
07/08/40	28.90	877.49
07/09/40	28.89	877.50
07/10/40	28.87	877.52
07/11/40	28.90	877.49
07/12/40	33.85	872.54
07/13/40	37.94	868.45
07/15/40	42.64	863.75
07/16/40	44.29	862.10
07/17/40	46.01	860.38
07/18/40	47.39	859.00
07/19/40	48.27	858.12
07/20/40	48.26	858.13
07/22/40	50.49	855.90
07/23/40	51.72	854.67
07/24/40	52.30	854.09
07/25/40	53.07	853.32
07/26/40	53.57	852.82
07/27/40	54.10	852.29
07/29/40	55.02	851.37
07/30/40	55.51	850.88
07/31/40	55.86	850.53
08/01/40	56.19	850.20
08/02/40	56.61	849.78
08/03/40	56.89	849.50
08/05/40	57.42	848.97
08/06/40	57.84	848.55
08/07/40	58.00	848.39
08/08/40	58.32	848.07
08/09/40	58.87	847.52
08/10/40	59.34	847.05
08/12/40	59.90	846.49
08/13/40	60.40	845.99
08/14/40	60.69	845.70
08/15/40	60.92	845.47
08/16/40	61.20	845.19
08/17/40	61.41	844.98
08/19/40	61.80	844.59
08/20/40	62.02	844.37
08/21/40	62.15	844.24
08/22/40	62.50	843.89
08/23/40	62.43	843.96
08/24/40	62.95	843.44
08/26/40	63.13	843.26
08/27/40	63.33	843.06
08/28/40	63.48	842.91
08/29/40	63.64	842.75
08/30/40	63.85	842.54
08/31/40	64.03	842.36
09/03/40	64.50	841.89
09/04/40	64.61	841.78
09/05/40	64.71	841.68
09/06/40	64.96	841.43
09/07/40	65.14	841.25
09/09/40	65.52	840.87
09/10/40	65.65	840.74
09/11/40	65.77	840.62
09/12/40	65.89	840.50
09/13/40	66.03	840.36
09/14/40	66.14	840.25
09/16/40	66.39	840.00
09/17/40	62.14	844.25
09/18/40	59.38	847.01
09/19/40	57.05	849.34
09/20/40	55.50	850.89
09/21/40	54.16	852.23
09/23/40	51.76	854.63
09/24/40	50.86	855.53
09/25/40	50.02	856.37
09/26/40	49.19	857.20
09/27/40	48.41	857.98
09/28/40	47.79	858.60
09/30/40	46.67	859.72
10/01/40	46.12	860.27
10/02/40	45.63	860.76
10/03/40	45.14	861.25
10/04/40	44.67	861.72
10/05/40	44.36	862.03
10/07/40	43.67	862.72
10/08/40	43.34	863.05
10/09/40	42.99	863.40
10/10/40	42.71	863.68
10/11/40	42.41	863.98
10/12/40	42.16	864.23
10/14/40	41.62	864.77
10/15/40	41.39	865.00
10/16/40	41.12	865.27
10/17/40	40.96	865.43
10/18/40	40.70	865.69
10/19/40	40.51	865.88
10/21/40	40.14	866.25
10/22/40	39.94	866.45
10/23/40	39.80	866.59
10/24/40	39.62	866.77
10/25/40	39.46	866.93
10/26/40	39.32	867.07
10/28/40	38.98	867.41
11/02/40	38.30	868.09
11/09/40	37.50	868.89
11/16/40	36.84	869.55
11/23/40	36.43	869.96
11/30/40	35.87	870.52
12/07/40	35.50	870.89
12/14/40	35.22	871.17
12/21/40	34.86	871.53
12/28/40	34.50	871.89
01/04/41	34.30	872.09
01/11/41	34.03	872.36
01/18/41	33.88	872.51
01/25/41	33.70	872.69
02/01/41	33.50	872.89
02/08/41	33.33	873.06
02/15/41	33.23	873.16
02/22/41	33.14	873.25
03/01/41	32.92	873.47
03/08/41	32.83	873.56
03/15/41	32.70	873.69
03/22/41	32.69	873.70
03/29/41	32.57	873.82
04/05/41	32.50	873.89
04/19/41	32.20	874.19
04/26/41	32.22	874.17
05/03/41	32.08	874.31
05/10/41	32.15	874.24
05/17/41	32.06	874.33
05/24/41	32.11	874.28
05/31/41	31.95	874.44
06/02/41	32.71	873.68
06/03/41	40.02	866.37
06/04/41	45.94	860.45
06/05/41	50.37	856.02
06/06/41	53.90	852.49
06/07/41	56.95	849.44
06/08/41	59.72	846.67
06/09/41	61.87	844.52
06/10/41	63.90	842.49
06/11/41	65.69	840.70
06/12/41	67.35	839.04
06/13/41	68.92	837.47
06/14/41	70.12	836.27
06/15/41	71.86	834.53
06/16/41	72.94	833.45
06/17/41	74.29	832.10
06/18/41	74.60	831.79
06/19/41	76.34	830.05
06/20/41	77.22	829.17
06/21/41	78.12	828.27
06/22/41	79.13	827.26
06/23/41	79.76	826.63
06/24/41	80.51	825.88
06/25/41	81.22	825.17
06/26/41	81.76	824.63
06/27/41	82.56	823.83
06/28/41	83.00	823.39
06/30/41	84.09	822.30
07/01/41	84.64	821.75
07/02/41	84.96	821.43
07/03/41	85.28	821.11
07/05/41	86.08	820.31
07/07/41	87.01	819.38
07/08/41	87.20	819.19
07/09/41	87.70	818.69
07/10/41	87.84	818.55
07/11/41	88.32	818.07
07/12/41	88.71	817.68
07/14/41	89.20	817.19
07/15/41	89.45	816.94
07/17/41	90.16	816.23
07/18/41	90.52	815.87
07/19/41	90.80	815.59
07/21/41	91.21	815.18
07/22/41	92.00	814.39
07/23/41	92.05	814.34
07/24/41	92.25	814.14
07/25/41	92.41	813.98

139-049-01CBD1 **(Continued)** MP Elev (msl,ft)=906.39

Fargo Aquifer SI (ft.)=0-183

Date	Depth to Water (ft)	WL Elev (msl, ft)
07/26/41	92.87	813.52
07/28/41	93.61	812.78
07/29/41	93.94	812.45
07/30/41	94.11	812.28
07/31/41	94.66	811.73
08/01/41	94.46	811.93
08/02/41	94.98	811.41
08/04/41	95.32	811.07
08/05/41	95.27	811.12
08/06/41	95.42	810.97
08/07/41	95.41	810.98
08/08/41	95.88	810.51
08/09/41	96.65	809.74
08/11/41	97.41	808.98
08/13/41	98.87	807.52
08/14/41	99.63	806.76
08/15/41	99.70	806.69
08/16/41	100.84	805.55
08/18/41	100.85	805.54
08/20/41	102.16	804.23
08/21/41	103.09	803.30
08/22/41	103.40	802.99
08/23/41	103.86	802.53
08/25/41	104.50	801.89
08/26/41	104.88	801.51
08/27/41	105.08	801.31
08/28/41	105.40	800.99
08/29/41	105.52	800.87
08/30/41	105.83	800.56
09/01/41	106.15	800.24
09/02/41	106.41	799.98
09/03/41	106.57	799.82
09/04/41	106.69	799.70
09/05/41	106.85	799.54
09/06/41	107.03	799.36
09/08/41	107.25	799.14
09/09/41	107.33	799.06
09/10/41	107.61	798.78
09/11/41	107.59	798.80
09/12/41	107.61	798.78
09/13/41	107.88	798.51
09/15/41	108.01	798.38
09/16/41	108.11	798.28
09/17/41	108.25	798.14
09/18/41	108.26	798.13
09/19/41	108.28	798.11
09/20/41	108.41	797.98
09/23/41	108.65	797.74
09/25/41	108.75	797.64
09/26/41	108.78	797.61
09/27/41	108.86	797.53
09/29/41	109.03	797.36
09/30/41	109.01	797.38
10/01/41	109.08	797.31
10/04/41	90.28	816.11
10/11/41	73.94	832.45
10/18/41	65.99	840.40
10/25/41	60.87	845.52
11/01/41	57.16	849.23
11/08/41	54.44	851.95
11/15/41	52.20	854.19
11/22/41	50.42	855.97
11/29/41	48.90	857.49
12/06/41	47.56	858.83
12/13/41	46.40	859.99
12/20/41	45.40	860.99
12/27/41	44.59	861.80
01/03/42	43.76	862.63
01/10/42	42.99	863.40
01/24/42	41.83	864.56
01/31/42	41.37	865.02
02/07/42	40.90	865.49
02/14/42	40.44	865.95
02/21/42	40.06	866.33
02/28/42	39.70	866.69
03/07/42	39.31	867.08
03/14/42	39.02	867.37
03/21/42	38.70	867.69
03/28/42	38.32	868.07
04/04/42	38.01	868.38
04/11/42	37.87	868.52
04/18/42	37.66	868.73
04/25/42	37.47	868.92
05/02/42	36.97	869.42
05/09/42	36.90	869.49
05/16/42	36.76	869.63
05/23/42	36.62	869.77
05/29/42	36.52	869.87
06/06/42	36.21	870.18
06/13/42	36.17	870.22
06/20/42	36.00	870.39
06/27/42	35.94	870.45
07/03/42	35.95	870.44
07/11/42	36.00	870.39
07/18/42	36.07	870.32
07/25/42	36.11	870.28
08/01/42	55.90	850.49
08/08/42	61.50	844.89
08/15/42	64.74	841.65
08/22/42	67.42	838.97
08/29/42	68.86	837.53
09/05/42	56.89	849.50
09/12/42	50.67	855.72
09/19/42	47.44	858.95
09/26/42	45.30	861.09
10/03/42	43.85	862.54
10/10/42	42.78	863.61
10/17/42	42.00	864.39
10/23/42	41.34	865.05
10/30/42	40.68	865.71
11/06/42	40.43	865.96
11/13/42	40.01	866.38
11/20/42	39.63	866.76
11/27/42	39.31	867.08
12/04/42	39.01	867.38
12/11/42	38.80	867.59
12/18/42	38.67	867.72
12/26/42	38.39	868.00
01/02/43	38.26	868.13
01/09/43	38.02	868.37
01/16/43	37.97	868.42
01/23/43	37.84	868.55
01/30/43	37.75	868.64
02/06/43	37.59	868.80
02/13/43	37.56	868.83
02/20/43	37.39	869.00
02/27/43	37.22	869.17
03/06/43	37.29	869.10
03/13/43	37.25	869.14
03/20/43	37.05	869.34
03/27/43	36.92	869.47
04/03/43	36.90	869.49
04/06/43	43.10	863.29
04/07/43	47.90	858.49
04/08/43	51.44	854.95
04/09/43	54.45	851.94
04/10/43	57.54	848.85
04/17/43	47.31	859.08
04/24/43	43.33	863.06
05/01/43	41.53	864.86
05/08/43	40.48	865.91
05/15/43	39.21	867.18
05/29/43	38.60	867.79
07/10/43	37.90	868.49
07/17/43	37.85	868.54
07/24/43	37.84	868.55
08/07/43	37.80	868.59
08/21/43	37.58	868.81
08/28/43	37.59	868.80
09/04/43	37.58	868.81
09/11/43	37.62	868.77
09/18/43	37.52	868.87
09/24/43	37.64	868.75
10/01/43	37.69	868.70
10/08/43	37.64	868.75
10/15/43	37.68	868.71
10/22/43	37.65	868.74
10/29/43	37.66	868.73
11/05/43	37.64	868.75
11/12/43	37.70	868.69
11/19/43	37.74	868.65
11/28/43	37.76	868.63
12/03/43	37.80	868.59
12/10/43	37.87	868.52
12/17/43	37.87	868.52
12/24/43	37.85	868.54
12/31/43	37.90	868.49
01/07/44	40.01	866.38
01/14/44	39.94	866.45
01/21/44	39.94	866.45
01/28/44	39.91	866.48
02/04/44	39.89	866.50
02/11/44	40.01	866.38
02/18/44	39.94	866.45
02/25/44	39.86	866.53
03/03/44	39.91	866.48
03/10/44	39.75	866.64
03/17/44	39.77	866.62
03/24/44	39.67	866.72
03/31/44	39.68	866.71
04/07/44	39.66	866.73
04/14/44	39.63	866.76
04/21/44	39.69	866.70
04/28/44	39.65	866.74
05/05/44	39.56	866.83
01/19/45	39.93	866.46
01/26/45	40.34	866.05
02/02/45	40.29	866.10
02/09/45	40.29	866.10
02/23/45	40.42	865.97
03/02/45	40.42	865.97
03/09/45	40.54	865.85
03/16/45	40.54	865.85
03/23/45	40.61	865.78
03/30/45	40.65	865.74
07/28/45	40.86	865.53
08/03/45	41.34	865.05
08/10/45	41.53	864.86
08/17/45	41.57	864.82
08/24/45	41.64	864.75
08/31/45	41.71	864.68
09/07/45	41.79	864.60
09/14/45	41.84	864.55
09/21/45	41.89	864.50
09/28/45	41.93	864.46
10/05/45	41.97	864.42
10/12/45	42.03	864.36
10/19/45	42.09	864.30
10/26/45	42.14	864.25
11/02/45	42.18	864.21
11/09/45	42.27	864.12
11/16/45	42.33	864.06
11/23/45	42.39	864.00
11/30/45	42.38	864.01
12/07/45	42.38	864.01
12/21/45	42.63	863.76
12/28/45	42.64	863.75
01/04/46	42.62	863.77
01/11/46	42.68	863.71
01/18/46	42.77	863.62
01/25/46	42.82	863.57
02/01/46	42.87	863.52
02/09/46	42.74	863.65
02/15/46	42.69	863.70
02/22/46	42.69	863.70
03/01/46	42.67	863.72
03/08/46	42.73	863.66
03/15/46	42.75	863.64
03/22/46	42.82	863.57
03/29/46	42.87	863.52
04/05/46	42.89	863.50
04/12/46	42.98	863.41
04/19/46	42.92	863.47
04/26/46	42.94	863.45
05/03/46	42.97	863.42
05/10/46	43.01	863.38
05/18/46	42.99	863.40
05/24/46	42.96	863.43
06/07/46	42.83	863.56
06/14/46	43.01	863.38
06/21/46	43.08	863.31
07/12/46	43.14	863.25
07/19/46	43.10	863.29
08/02/46	46.40	859.99
08/09/46	67.22	839.17
08/17/46	81.53	824.86
08/23/46	78.55	827.84
08/30/46	75.05	831.34
09/06/46	74.59	831.80
09/13/46	67.06	839.33
09/20/46	61.15	845.24
09/27/46	57.33	849.06
10/04/46	53.63	852.76
10/18/46	51.46	854.93
10/25/46	50.48	855.91
11/01/46	49.75	856.64
11/08/46	48.93	857.46
11/15/46	48.55	857.84
11/22/46	48.33	858.06
11/29/46	47.94	858.45
12/06/46	47.16	859.23
12/20/46	47.16	859.23
12/27/46	46.70	859.69

139-049-01CBD2 MP Elev (msl,ft)=909.09

Fargo Aquifer SI (ft.)=0-192

Date	Depth to Water (ft)	WL Elev (msl, ft)
08/03/37	31.67	877.42
08/07/37	31.60	877.49
08/14/37	31.50	877.59
08/21/37	31.53	877.56
08/28/37	31.40	877.69
09/04/37	31.40	877.69
09/11/37	31.26	877.83
09/18/37	31.20	877.89
09/25/37	31.25	877.84
10/02/37	31.20	877.89
01/05/38	55.10	853.99
01/08/38	50.10	858.99
01/12/38	46.10	862.99
01/15/38	44.10	864.99
01/19/38	42.10	866.99
07/23/38	49.10	859.99
07/30/38	54.10	854.99
08/06/38	59.10	849.99
08/13/38	61.10	847.99
08/20/38	64.10	844.99
08/27/38	66.10	842.99
09/03/38	71.10	837.99
09/10/38	73.10	835.99
09/19/38	76.10	832.99
09/24/38	76.10	832.99
10/01/38	72.10	836.99

139-049-01CCA MP Elev (msl,ft)=904.38

Fargo Aquifer SI (ft.)=184-190

Date	Depth to Water (ft)	WL Elev (msl, ft)
09/08/81	127.77	776.61
08/24/82	140.21	764.17
11/17/82	134.66	769.72
04/18/83	141.04	763.34
05/19/83	142.28	762.10
05/24/83	143.11	761.27
06/02/83	143.44	760.94
06/08/83	143.49	760.89
06/22/83	144.64	759.74
07/28/83	144.45	759.93
08/18/83	145.02	759.36
09/14/83	144.55	759.83
10/11/83	140.29	764.09
11/08/83	138.91	765.47
12/14/83	136.91	767.47
04/10/84	140.29	764.09
05/15/84	139.91	764.47
06/20/84	140.16	764.22
07/11/84	142.10	762.28
08/09/84	142.77	761.61
09/12/84	139.66	764.72
10/09/84	137.74	766.64
10/31/84	138.02	766.36
12/05/84	137.60	766.78
04/09/85	140.49	763.89
05/05/85	140.81	763.57
06/07/85	139.71	764.67
07/08/85	144.49	759.89
08/31/86	144.91	759.47
10/09/86	143.58	760.80
11/02/86	140.61	763.77
12/05/86	140.63	763.75
04/24/87	142.37	762.01
05/30/87	141.84	762.54
06/27/87	144.90	759.48
07/31/87	146.58	757.80
08/29/87	145.46	758.92
09/26/87	143.50	760.88
10/31/87	143.79	760.59
11/29/87	142.85	761.53
12/19/87	142.68	761.70
04/29/88	143.13	761.25
05/28/88	142.12	762.26
06/25/88	143.22	761.16
07/22/88	145.07	759.31
08/20/88	146.00	758.38
09/01/88	143.11	761.27
09/16/88	144.48	759.90
10/14/88	144.54	759.84
11/05/88	144.11	760.27
04/21/89	146.06	758.32
05/12/89	147.08	757.30
06/04/89	145.36	759.02
06/30/89	147.61	756.77
08/01/89	148.16	756.22
04/26/90	140.30	764.08
05/05/90	142.04	762.34
05/25/90	143.33	761.05
06/29/90	144.42	759.96
08/04/90	145.15	759.23
09/01/90	144.94	759.44
09/28/90	144.37	760.01
10/17/90	144.53	759.85
10/26/90	144.82	759.56
11/07/90	143.98	760.40
11/17/90	141.90	762.48
12/09/90	139.09	765.29
03/29/91	141.80	762.58
05/10/91	142.62	761.76
06/01/91	141.95	762.43
07/13/91	141.47	762.91
08/09/91	142.48	761.90
08/31/91	142.49	761.89
09/28/91	141.04	763.34
10/19/91	140.33	764.05
11/17/91	139.65	764.73
12/21/91	138.65	765.73
04/17/92	141.41	762.97
05/20/92	141.44	762.94
06/13/92	141.65	762.73
07/26/92	141.15	763.23
08/27/92	141.93	762.45
09/24/92	140.63	763.75
10/17/92	139.20	765.18
11/11/92	139.16	765.22
12/05/92	137.93	766.45
05/01/93	135.92	768.46
06/04/93	137.42	766.96
08/06/93	137.95	766.43
08/28/93	137.10	767.28
09/25/93	136.42	767.96
10/17/93	136.37	768.01
11/11/93	137.51	766.87
04/16/94	136.26	768.12
05/15/94	135.52	768.86
06/11/94	137.00	767.38
07/24/94	135.47	768.91
08/20/94	136.96	767.42
09/24/94	136.72	767.66
10/28/94	137.03	767.35
11/26/94	136.35	768.03
04/30/95	136.39	767.99
05/28/95	136.70	767.68
07/01/95	136.95	767.43
08/05/95	137.70	766.68
09/09/95	140.40	763.98
10/27/95	138.32	766.06
11/23/95	138.08	766.30
06/04/96	137.22	767.16
06/30/96	139.05	765.33
07/29/96	140.90	763.48
08/24/96	139.55	764.83
10/05/96	138.30	766.08

139-049-01CCD2 MP Elev (msl,ft)=905.49

Fargo Aquifer SI (ft.)=0-196

Date	Depth to Water (ft)	WL Elev (msl, ft)
08/02/37	26.16	879.33
08/07/37	26.07	879.42
08/14/37	25.97	879.52
08/21/37	26.00	879.49
08/28/37	25.88	879.61
09/04/37	25.86	879.63
09/11/37	25.73	879.76
09/18/37	25.67	879.82
09/25/37	25.72	879.77
10/02/37	25.68	879.81
10/09/37	25.61	879.88
10/16/37	25.63	879.86
10/23/37	25.57	879.92
10/30/37	25.69	879.80
11/06/37	25.56	879.93
11/13/37	25.50	879.99
11/20/37	25.61	879.88
11/27/37	25.47	880.02
12/04/37	25.77	879.72
12/18/37	25.72	879.77
01/05/38	50.92	854.57
01/08/38	46.48	859.01
01/12/38	42.94	862.55
01/15/38	40.85	864.64
01/19/38	38.71	866.78
01/22/38	37.45	868.04
01/26/38	36.13	869.36
01/29/38	35.25	870.24
02/02/38	34.25	871.24
02/05/38	33.64	871.85
02/09/38	32.99	872.50
02/12/38	32.43	873.06
02/16/38	31.84	873.65
02/19/38	31.49	874.00
02/23/38	31.03	874.46
02/26/38	30.66	874.83
03/02/38	30.36	875.13
03/05/38	30.13	875.36
03/12/38	30.54	874.95
03/19/38	29.11	876.38
03/26/38	28.82	876.67
04/02/38	28.48	877.01
04/09/38	28.20	877.29
04/16/38	27.90	877.59
04/23/38	27.68	877.81
04/30/38	27.38	878.11
05/07/38	27.18	878.31
05/14/38	26.92	878.57
05/21/38	26.77	878.72
05/28/38	26.63	878.86
06/04/38	26.52	878.97
06/11/38	26.48	879.01
06/25/38	26.44	879.05
07/09/38	33.03	872.46
07/16/38	36.55	868.94
07/23/38	47.31	858.18
07/30/38	51.25	854.24
08/06/38	56.91	848.58
08/13/38	59.60	845.89
08/20/38	61.98	843.51
08/27/38	63.62	841.87
09/03/38	66.92	838.57
09/10/38	69.65	835.84
09/19/38	71.89	833.60
09/24/38	72.38	833.11
10/01/38	67.98	837.51
10/08/38	53.50	851.99
10/15/38	47.62	857.87
10/29/38	49.71	855.78
11/05/38	42.72	862.77
11/12/38	40.25	865.24
11/19/38	38.63	866.86
11/26/38	37.42	868.07
12/03/38	36.22	869.27
12/10/38	35.38	870.11
12/17/38	34.67	870.82
12/24/38	34.01	871.48
12/31/38	33.46	872.03
01/07/39	32.98	872.51
01/14/39	32.49	873.00
01/21/39	32.06	873.43
01/28/39	31.69	873.80
02/04/39	31.35	874.14
02/18/39	30.73	874.76
03/04/39	30.28	875.21
03/18/39	29.91	875.58
04/01/39	29.55	875.94
04/15/39	29.32	876.17
04/29/39	29.15	876.34
05/13/39	29.04	876.45
05/27/39	28.91	876.58
06/10/39	28.82	876.67
06/24/39	28.75	876.74
07/08/39	28.84	876.65
07/15/39	35.85	869.64
07/22/39	48.57	856.92
07/29/39	53.57	851.92
08/05/39	57.13	848.36
08/12/39	59.67	845.82
08/19/39	61.77	843.72
08/26/39	63.25	842.24
09/02/39	64.75	840.74
09/11/39	64.91	840.58
09/16/39	66.88	838.61
09/23/39	68.07	837.42
09/30/39	68.53	836.96
10/07/39	53.38	852.11
10/14/39	47.92	857.57
10/21/39	44.67	860.82
10/28/39	42.49	863.00
11/04/39	40.95	864.54
11/18/39	38.74	866.75
11/25/39	37.97	867.52
12/02/39	37.17	868.32
12/16/39	35.97	869.52
12/23/39	35.57	869.92
12/30/39	35.13	870.36
01/06/40	34.75	870.74
01/13/40	34.38	871.11
01/20/40	33.11	872.38
01/27/40	33.79	871.70
02/03/40	33.52	871.97
02/10/40	33.20	872.29
02/17/40	33.11	872.38
02/24/40	32.90	872.59
03/02/40	32.62	872.87
03/09/40	32.42	873.07
03/16/40	32.21	873.28
03/23/40	32.14	873.35
03/30/40	31.84	873.65
04/06/40	31.75	873.74
04/13/40	31.65	873.84
04/20/40	31.60	873.89
04/27/40	31.50	873.99
05/04/40	31.39	874.10
05/11/40	31.34	874.15
05/18/40	31.19	874.30
05/25/40	31.16	874.33
06/01/40	31.12	874.37
06/08/40	31.04	874.45
06/15/40	31.07	874.42
06/22/40	31.01	874.48
06/29/40	31.04	874.45
07/06/40	31.04	874.45
07/08/40	31.10	874.39
07/09/40	31.10	874.39
07/10/40	31.09	874.40
07/11/40	31.14	874.35
07/12/40	35.10	870.39
07/13/40	39.22	866.27
07/15/40	43.81	861.68
07/16/40	45.57	859.92
07/17/40	47.23	858.26
07/18/40	48.63	856.86
07/19/40	49.52	855.97
07/20/40	49.49	856.00
07/22/40	51.75	853.74
07/23/40	52.94	852.55
07/24/40	53.55	851.94
07/25/40	54.29	851.20
07/26/40	54.82	850.67
07/27/40	55.32	850.17
07/29/40	56.26	849.23
07/30/40	56.69	848.80
07/31/40	57.11	848.38
08/01/40	57.39	848.10
08/03/40	58.14	847.35
08/05/40	58.62	846.87
08/06/40	59.03	846.46
08/07/40	59.27	846.22
08/08/40	59.50	845.99
08/09/40	60.18	845.31
08/10/40	60.53	844.96
08/12/40	61.04	844.45
08/13/40	61.59	843.90
08/14/40	61.82	843.67
08/15/40	62.08	843.41
08/16/40	62.37	843.12
08/17/40	62.61	842.88
08/19/40	63.00	842.49
08/20/40	63.22	842.27
08/21/40	63.35	842.14
08/22/40	63.68	841.81
08/23/40	63.19	842.30
08/24/40	64.01	841.48
08/26/40	64.31	841.18
08/27/40	64.52	840.97
08/28/40	64.70	840.79
08/29/40	64.82	840.67
08/30/40	65.01	840.48
08/31/40	65.20	840.29
09/03/40	65.68	839.81
09/04/40	66.13	839.36
09/05/40	65.99	839.50
09/06/40	66.19	839.30
09/07/40	66.28	839.21
09/09/40	66.73	838.76
09/10/40	66.84	838.65
09/11/40	66.97	838.52
09/12/40	67.09	838.40
09/13/40	67.20	838.29
09/14/40	67.32	838.17
09/16/40	67.62	837.87
09/17/40	63.36	842.13
09/18/40	60.57	844.92
09/19/40	68.29	837.20
09/20/40	56.71	848.78
09/21/40	55.36	850.13
09/23/40	52.98	852.51
09/24/40	52.05	853.44
09/25/40	51.22	854.27
09/26/40	50.40	855.09
09/27/40	49.65	855.84
09/28/40	49.04	856.45
09/30/40	47.89	857.60
10/01/40	47.34	858.15
10/02/40	46.85	858.64
10/03/40	46.37	859.12
10/04/40	45.90	859.59
10/05/40	45.55	859.94
10/07/40	44.87	860.62
10/08/40	44.56	860.93
10/09/40	44.20	861.29
10/10/40	43.93	861.56
10/11/40	43.63	861.86
10/12/40	43.36	862.13
10/14/40	42.84	862.65
10/15/40	42.60	862.89
10/16/40	42.34	863.15
10/17/40	42.16	863.33
10/18/40	41.91	863.58
10/19/40	41.72	863.77
10/21/40	41.34	864.15
10/22/40	41.15	864.34
10/23/40	41.01	864.48
10/24/40	40.84	864.65
10/25/40	40.68	864.81
10/26/40	40.53	864.96
10/28/40	40.20	865.29
11/02/40	39.50	865.99
11/08/40	38.73	866.76
11/16/40	38.06	867.43
11/23/40	37.63	867.86
11/30/40	37.13	868.36
12/07/40	36.72	868.77
12/14/40	36.45	869.04
12/21/40	36.08	869.41
12/28/40	35.75	869.74
01/04/41	35.50	869.99
01/11/41	35.24	870.25
01/18/41	35.08	870.41
01/25/41	34.93	870.56
02/01/41	34.70	870.79
02/08/41	34.53	870.96
02/15/41	34.44	871.05
02/22/41	34.36	871.13
02/24/41	34.36	871.13
03/01/41	34.12	871.37
03/08/41	34.05	871.44
03/15/41	33.93	871.56
03/22/41	33.91	871.58
03/29/41	33.80	871.69
04/05/41	33.73	871.76
04/12/41	33.59	871.90
04/19/41	33.45	872.04
04/26/41	33.44	872.05
05/03/41	33.32	872.17
05/10/41	33.36	872.13
05/17/41	33.30	872.19
05/24/41	33.34	872.15
05/31/41	33.16	872.33
06/02/41	56.25	849.24
06/03/41	63.30	842.19
06/04/41	78.32	827.17
06/05/41	72.30	833.19
06/06/41	55.21	850.28
06/07/41	58.13	847.36
06/08/41	80.60	824.89
06/09/41	82.85	822.64
06/10/41	84.85	820.64
06/11/41	86.30	819.19
06/12/41	88.10	817.39
06/13/41	62.60	842.89
06/14/41	91.05	814.44
06/15/41	92.30	813.19
06/16/41	93.55	811.94
06/17/41	94.60	810.89
06/18/41	95.60	809.89
06/19/41	96.70	808.79
06/20/41	97.70	807.79
06/21/41	98.50	806.99
06/22/41	99.20	806.29
06/23/41	100.15	805.34
06/24/41	100.95	804.54
06/25/41	101.80	803.69
06/26/41	102.05	803.44
06/27/41	102.80	802.69
06/28/41	103.35	802.14
06/29/41	103.65	801.84
06/30/41	104.00	801.49
07/01/41	104.30	801.19
07/02/41	104.75	800.74
07/03/41	105.10	800.39
07/04/41	105.35	800.14
07/05/41	105.80	799.69
07/06/41	106.00	799.49
07/07/41	106.60	798.89
07/08/41	106.90	798.59
07/09/41	107.30	798.19
07/10/41	107.60	797.89
07/11/41	108.10	797.39
07/12/41	108.40	797.09
07/13/41	108.50	796.99
07/14/41	108.80	796.69
07/15/41	108.80	796.69
07/16/41	109.40	796.09

139-049-01CCD2 **(Continued)** MP Elev (msl,ft)=905.49

Fargo Aquifer SI (ft.)=0-196

Date	Depth to Water (ft)	WL Elev (msl, ft)	Date	Depth to Water (ft)	WL Elev (msl, ft)	Date	Depth to Water (ft)	WL Elev (msl, ft)	Date	Depth to Water (ft)	WL Elev (msl, ft)
07/17/41	109.80	795.69	10/06/41	86.35	819.14	12/25/41	45.98	859.51	03/20/42	39.95	865.54
07/18/41	110.20	795.29	10/07/41	83.55	821.94	12/26/41	45.86	859.63	03/21/42	39.90	865.59
07/19/41	110.70	794.79	10/08/41	81.30	824.19	12/27/41	45.80	859.69	03/22/42	39.89	865.60
07/20/41	110.75	794.74	10/09/41	79.25	826.24	12/28/41	45.68	859.81	03/23/42	39.84	865.65
07/21/41	110.95	794.54	10/10/41	77.45	828.04	12/29/41	45.55	859.94	03/24/42	39.79	865.70
07/22/41	111.90	793.59	10/11/41	75.75	829.74	12/30/41	45.40	860.09	03/25/42	39.75	865.74
07/23/41	111.95	793.54	10/12/41	74.30	831.19	12/31/41	45.34	860.15	03/26/42	39.60	865.89
07/24/41	112.10	793.39	10/13/41	72.95	832.54				03/27/42	39.56	865.93
07/25/41	113.30	792.19	10/14/41	71.75	833.74	01/01/42	45.22	860.27	03/28/42	39.53	865.96
07/26/41	113.40	792.09	10/15/41	70.60	834.89	01/02/42	45.02	860.47	03/29/42	39.50	865.99
07/27/41	113.05	792.44	10/16/41	69.55	835.94	01/03/42	44.93	860.56	03/30/42	39.49	866.00
07/28/41	113.80	791.69	10/17/41	68.50	836.99	01/10/42	44.15	861.34	03/31/42	39.47	866.02
07/29/41	114.00	791.49	10/18/41	67.60	837.89	01/11/42	44.15	861.34	04/01/42	39.38	866.11
07/30/41	113.85	791.64	10/19/41	66.70	838.79	01/12/42	44.05	861.44	04/02/42	39.33	866.16
07/31/41	114.35	791.14	10/20/41	65.85	839.64	01/13/42	43.97	861.52	04/03/42	39.30	866.19
08/01/41	114.60	790.89	10/21/41	65.10	840.39	01/14/42	43.89	861.60	04/04/42	39.24	866.25
08/02/41	114.90	790.59	10/22/41	64.30	841.19	01/15/42	43.80	861.69	04/05/42	39.26	866.23
08/03/41	114.65	790.84	10/23/41	63.70	841.79	01/16/42	43.74	861.75	04/06/42	39.18	866.31
08/04/41	114.45	791.04	10/24/41	63.00	842.49	01/17/42	43.57	861.92	04/07/42	39.18	866.31
08/05/41	114.65	790.84	10/25/41	62.40	843.09	01/18/42	43.53	861.96	04/08/42	39.17	866.32
08/06/41	115.00	790.49	10/26/41	61.70	843.79	01/19/42	43.46	862.03	04/09/42	39.11	866.38
08/07/41	115.30	790.19	10/27/41	61.20	844.29	01/20/42	43.40	862.09	04/10/42	39.07	866.42
08/08/41	116.50	788.99	10/28/41	60.70	844.79	01/21/42	43.31	862.18	04/11/42	39.06	866.43
08/09/41	117.00	788.49	10/29/41	60.15	845.34	01/22/42	43.21	862.28	04/12/42	39.01	866.48
08/10/41	117.05	788.44	10/30/41	59.65	845.84	01/23/42	43.10	862.39	04/13/42	38.95	866.54
08/11/41	117.50	787.99	10/31/41	59.20	846.29	01/24/42	43.02	862.47	04/14/42	38.91	866.58
08/12/41	118.90	786.59	11/01/41	58.65	846.84	01/25/42	42.96	862.53	04/15/42	38.87	866.62
08/13/41	119.65	785.84	11/02/41	58.10	847.39	01/26/42	42.89	862.60	04/16/42	38.91	866.58
08/14/41	120.30	785.19	11/03/41	57.70	847.79	01/27/42	42.84	862.65	04/17/42	38.91	866.58
08/15/41	120.95	784.54	11/04/41	57.30	848.19	01/28/42	42.79	862.70	04/18/42	38.85	866.64
08/16/41	120.75	784.74	11/05/41	56.95	848.54	01/29/42	42.65	862.84	04/19/42	38.86	866.63
08/17/41	120.60	784.89	11/06/41	56.50	848.99	01/30/42	42.62	862.87	04/20/42	38.83	866.66
08/18/41	121.55	783.94	11/07/41	56.15	849.34	01/31/42	42.57	862.92	04/21/42	38.78	866.71
08/19/41	122.30	783.19	11/08/41	55.80	849.69	02/01/42	42.51	862.98	04/22/42	38.71	866.78
08/20/41	123.15	782.34	11/09/41	55.45	850.04	02/02/42	42.43	863.06	04/23/42	38.64	866.85
08/21/41	123.55	781.94	11/10/41	55.10	850.39	02/03/42	42.32	863.17	04/24/42	38.70	866.79
08/22/41	123.95	781.54	11/11/41	54.80	850.69	02/04/42	42.25	863.24	04/25/42	38.70	866.79
08/23/41	124.35	781.14	11/12/41	54.40	851.09	02/05/42	42.14	863.35	04/26/42	38.63	866.86
08/24/41	124.50	780.99	11/13/41	54.10	851.39	02/06/42	42.14	863.35	04/27/42	38.62	866.87
08/25/41	124.70	780.79	11/14/41	53.85	851.64	02/07/42	42.09	863.40	04/28/42	38.44	867.05
08/26/41	125.00	780.49	11/15/41	53.50	851.99	02/08/42	42.02	863.47	04/29/42	38.43	867.06
08/27/41	125.20	780.29	11/16/41	53.25	852.24	02/09/42	41.95	863.54	04/30/42	38.30	867.19
08/28/41	125.30	780.19	11/17/41	52.95	852.54	02/10/42	41.90	863.59	05/01/42	38.21	867.28
08/29/41	125.40	780.09	11/18/41	52.70	852.79	02/11/42	41.83	863.66	05/02/42	38.18	867.31
08/30/41	125.55	779.94	11/19/41	52.45	853.04	02/12/42	41.77	863.72	05/03/42	38.17	867.32
08/31/41	125.70	779.79	11/20/41	52.20	853.29	02/13/42	41.72	863.77	05/04/42	38.18	867.31
09/01/41	125.85	779.64	11/21/41	51.95	853.54	02/14/42	41.63	863.86	05/05/42	38.19	867.30
09/02/41	126.05	779.44	11/22/41	51.70	853.79	02/15/42	41.56	863.93	05/06/42	38.16	867.33
09/03/41	126.10	779.39	11/23/41	51.46	854.03	02/16/42	41.47	864.02	05/07/42	38.13	867.36
09/04/41	126.10	779.39	11/24/41	51.20	854.29	02/17/42	41.46	864.03	05/08/42	38.10	867.39
09/05/41	126.30	779.19	11/25/41	50.92	854.57	02/18/42	41.40	864.09	05/09/42	38.10	867.39
09/06/41	126.45	779.04	11/26/41	50.76	854.73	02/19/42	41.31	864.18	05/10/42	38.05	867.44
09/07/41	126.35	779.14	11/27/41	50.56	854.93	02/20/42	41.28	864.21	05/11/42	38.01	867.48
09/08/41	126.35	779.14	11/28/41	50.37	855.12	02/21/42	41.23	864.26	05/12/42	37.99	867.50
09/09/41	126.35	779.14	11/29/41	50.15	855.34	02/22/42	41.21	864.28	05/13/42	37.96	867.53
09/10/41	126.50	778.99	11/30/41	49.97	855.52	02/23/42	41.13	864.36	05/14/42	37.97	867.52
09/11/41	126.55	778.94	12/01/41	49.70	855.79	02/24/42	41.10	864.39	05/15/42	37.95	867.54
09/12/41	126.60	778.89	12/02/41	49.54	855.95	02/25/42	41.03	864.46	05/16/42	37.94	867.55
09/13/41	126.80	778.69	12/03/41	49.30	856.19	02/26/42	40.97	864.52	05/17/42	37.92	867.57
09/14/41	126.80	778.69	12/04/41	49.08	856.41	02/27/42	40.94	864.55	05/18/42	37.87	867.62
09/15/41	126.85	778.64	12/05/41	48.96	856.53	02/28/42	40.88	864.61	05/19/42	37.88	867.61
09/16/41	126.90	778.59	12/06/41	48.87	856.62	03/01/42	40.83	864.66	05/20/42	37.87	867.62
09/17/41	127.00	778.49	12/07/41	48.60	856.89	03/02/42	40.75	864.74	05/21/42	37.87	867.62
09/18/41	127.00	778.49	12/08/41	48.47	857.02	03/03/42	40.72	864.77	05/22/42	37.83	867.66
09/19/41	127.10	778.39	12/09/41	48.32	857.17	03/04/42	40.61	864.88	05/23/42	37.81	867.68
09/20/41	127.10	778.39	12/10/41	48.23	857.26	03/05/42	40.57	864.92	05/24/42	37.78	867.71
09/21/41	127.10	778.39	12/11/41	48.07	857.42	03/06/42	40.50	864.99	05/25/42	37.72	867.77
09/22/41	127.20	778.29	12/12/41	47.82	857.67	03/07/42	40.48	865.01	05/26/42	37.75	867.74
09/23/41	127.25	778.24	12/13/41	47.68	857.81	03/08/42	40.45	865.04	05/27/42	37.73	867.76
09/24/41	127.25	778.24	12/14/41	47.50	857.99	03/09/42	40.40	865.09	05/28/42	37.70	867.79
09/26/41	127.20	778.29	12/15/41	47.30	858.19	03/10/42	40.35	865.14	05/29/42	37.71	867.78
09/27/41	127.20	778.29	12/16/41	47.15	858.34	03/11/42	40.30	865.19	05/30/42	37.65	867.84
09/28/41	127.25	778.24	12/17/41	47.00	858.49	03/12/42	40.28	865.21	05/31/42	37.62	867.87
09/29/41	127.20	778.29	12/18/41	46.88	858.61	03/13/42	40.24	865.25	06/01/42	37.59	867.90
09/30/41	127.20	778.29	12/19/41	46.78	858.71	03/14/42	40.20	865.29	06/02/42	37.56	867.93
10/01/41	116.30	789.19	12/20/41	46.64	858.85	03/15/42	40.17	865.32	06/03/42	37.54	867.95
10/02/41	104.50	800.99	12/21/41	46.46	859.03	03/16/42	40.10	865.39	06/04/42	37.53	867.96
10/03/41	98.10	807.39	12/22/41	46.32	859.17	03/17/42	40.04	865.45	06/06/42	37.39	868.10
10/04/41	93.20	812.29	12/23/41	46.22	859.27	03/18/42	40.01	865.48	06/07/42	37.39	868.10
10/05/41	89.45	816.04	12/24/41	46.09	859.40	03/19/42	39.97	865.52	06/08/42	37.39	868.10

139-049-01CCD2 **(Continued)** MP Elev (msl,ft)=905.49

Fargo Aquifer SI (ft.)=0-196

Date	Depth to Water (ft)	WL Elev (msl, ft)	Date	Depth to Water (ft)	WL Elev (msl, ft)	Date	Depth to Water (ft)	WL Elev (msl, ft)	Date	Depth to Water (ft)	WL Elev (msl, ft)
06/09/42	37.37	868.12	09/11/42	52.70	852.79	12/06/42	40.17	865.32	03/22/43	38.23	867.26
06/10/42	37.33	868.16	09/12/42	52.10	853.39	12/07/42	40.16	865.33	03/23/43	38.19	867.30
06/11/42	37.30	868.19	09/13/42	51.50	853.99	12/08/42	40.12	865.37	03/24/43	38.09	867.40
06/12/42	37.33	868.16	09/14/42	50.90	854.59	12/09/42	40.08	865.41	03/25/43	37.88	867.61
06/13/42	37.34	868.15	09/15/42	50.40	855.09	12/10/42	40.02	865.47	03/26/43	37.97	867.52
06/14/42	37.31	868.18	09/16/42	49.90	855.59	12/11/42	39.99	865.50	03/27/43	38.04	867.45
06/15/42	37.27	868.22	09/17/42	49.50	855.99	12/12/42	39.96	865.53	03/28/43	38.04	867.45
06/16/42	37.25	868.24	09/18/42	49.10	856.39	12/13/42	39.95	865.54	03/29/43	38.02	867.47
06/17/42	37.20	868.29	09/19/42	48.70	856.79	12/14/42	39.89	865.60	03/30/43	37.97	867.52
06/18/42	37.20	868.29	09/20/42	48.40	857.09	12/15/42	39.87	865.62	03/31/43	37.77	867.72
06/19/42	37.18	868.31	09/21/42	48.00	857.49	12/16/42	39.85	865.64	04/01/43	38.12	867.37
06/20/42	37.19	868.30	09/22/42	47.70	857.79	12/17/42	39.82	865.67	04/02/43	38.13	867.36
06/21/42	37.19	868.30	09/23/42	47.30	858.19	12/18/42	39.85	865.64	04/03/43	38.05	867.44
06/22/42	37.20	868.29	09/24/42	47.20	858.29	12/19/42	39.88	865.61	04/04/43	38.15	867.34
06/23/42	37.20	868.29	09/25/42	46.90	858.59	12/20/42	39.82	865.67	04/13/43	55.00	850.49
06/24/42	37.18	868.31	09/26/42	46.60	858.89	12/21/42	39.70	865.79	04/14/43	53.05	852.44
06/25/42	37.15	868.34	09/27/42	46.35	859.14	12/22/42	39.62	865.87	04/15/43	51.45	854.04
06/26/42	37.15	868.34	09/28/42	46.20	859.29	12/23/42	39.65	865.84	04/16/43	50.10	855.39
06/27/42	37.12	868.37	09/29/42	45.90	859.59	12/24/42	39.65	865.84	04/17/43	49.20	856.29
06/28/42	37.07	868.42	09/30/42	45.70	859.79	12/25/42	39.60	865.89	04/18/43	48.00	857.49
06/29/42	37.06	868.43	10/01/42	45.50	859.99	12/26/42	39.59	865.90	04/19/43	47.35	858.14
06/30/42	37.10	868.39	10/02/42	45.30	860.19	12/27/42	39.61	865.88	04/20/43	46.70	858.79
07/02/42	37.08	868.41	10/03/42	45.10	860.39	12/28/42	39.55	865.94	04/21/43	46.20	859.29
07/03/42	37.12	868.37	10/04/42	44.90	860.59	12/29/42	39.49	866.00	04/22/43	45.68	859.81
07/04/42	37.10	868.39	10/05/42	44.75	860.74	12/30/42	39.49	866.00	04/23/43	45.25	860.24
07/05/42	37.10	868.39	10/06/42	44.60	860.89				04/24/43	44.87	860.62
07/06/42	37.10	868.39	10/07/42	44.45	861.04	01/02/43	39.33	866.16	04/25/43	44.30	861.19
07/07/42	37.09	868.40	10/08/42	44.30	861.19	01/09/43	39.20	866.29	04/26/43	44.06	861.43
07/08/42	37.08	868.41	10/09/42	44.20	861.29	01/23/43	39.02	866.47	04/27/43	43.70	861.79
07/09/42	37.12	868.37	10/10/42	44.10	861.39	01/24/43	39.00	866.49	04/28/43	43.50	861.99
07/10/42	37.17	868.32	10/11/42	43.90	861.59	01/25/43	39.01	866.48	04/29/43	43.37	862.12
07/11/42	37.18	868.31	10/12/42	43.64	861.85	01/26/43	39.02	866.47	04/30/43	42.93	862.56
07/12/42	37.17	868.32	10/13/42	43.63	861.86	01/27/43	38.99	866.50	05/01/43	42.83	862.66
07/13/42	37.20	868.29	10/14/42	43.55	861.94	01/28/43	38.99	866.50	05/02/43	42.48	863.01
07/14/42	37.21	868.28	10/15/42	43.40	862.09	01/29/43	38.94	866.55	05/03/43	42.37	863.12
07/15/42	37.20	868.29	10/16/42	43.30	862.19	01/30/43	38.93	866.56	05/04/43	42.22	863.27
07/16/42	37.19	868.30	10/17/42	43.20	862.29	02/06/43	38.78	866.71	05/05/43	42.03	863.46
07/17/42	37.26	868.23	10/18/42	43.10	862.39	02/07/43	38.78	866.71	05/06/43	41.85	863.64
07/18/42	37.27	868.22	10/19/42	43.00	862.49	02/08/43	38.77	866.72	05/07/43	41.77	863.72
07/19/42	37.35	868.14	10/20/42	42.85	862.64	02/09/43	38.72	866.77	05/08/43	41.68	863.81
07/20/42	37.37	868.12	10/21/42	42.78	862.71	02/10/43	38.70	866.79	05/09/43	41.52	863.97
07/21/42	37.37	868.12	10/22/42	42.59	862.90	02/11/43	38.70	866.79	05/10/43	41.36	864.13
07/22/42	37.32	868.17	10/23/42	42.54	862.95	02/12/43	38.72	866.77	05/11/43	41.29	864.20
07/25/42	45.14	860.35	10/24/42	42.49	863.00	02/13/43	38.72	866.77	05/12/43	41.22	864.27
07/26/42	61.30	844.19	10/25/42	42.40	863.09	02/14/43	38.74	866.75	05/13/43	41.12	864.37
08/01/42	72.10	833.39	10/26/42	42.34	863.15	02/15/43	38.71	866.78	05/14/43	41.02	864.47
08/02/42	61.90	843.59	10/27/42	42.23	863.26	02/16/43	38.70	866.79	05/15/43	40.92	864.57
08/03/42	61.90	843.59	10/28/42	42.14	863.35	02/17/43	38.64	866.85	05/16/43	40.69	864.80
08/04/42	74.30	831.19	10/29/42	42.03	863.46	02/18/43	38.64	866.85	05/17/43	40.69	864.80
08/05/42	75.20	830.29	10/30/42	41.92	863.57	02/19/43	38.60	866.89	05/18/43	40.69	864.80
08/06/42	74.30	831.19	11/06/42	41.60	863.89	02/20/43	38.58	866.91	05/19/43	40.60	864.89
08/07/42	75.20	830.29	11/07/42	41.59	863.90	02/21/43	38.58	866.91	05/20/43	40.51	864.98
08/08/42	77.10	828.39	11/08/42	41.54	863.95	02/22/43	38.54	866.95	05/21/43	40.47	865.02
08/09/42	64.52	840.97	11/09/42	41.42	864.07	02/23/43	38.55	866.94	05/22/43	39.40	866.09
08/10/42	65.75	839.74	11/10/42	41.43	864.06	02/24/43	38.62	866.87	05/23/43	39.26	866.23
08/11/42	65.75	839.74	11/11/42	41.35	864.14	02/25/43	38.60	866.89	05/24/43	40.05	865.44
08/12/42	65.34	840.15	11/12/42	41.21	864.28	02/26/43	38.57	866.92	05/25/43	39.95	865.54
08/13/42	68.11	837.38	11/13/42	41.20	864.29	02/27/43	38.50	866.99	05/26/43	39.87	865.62
08/14/42	68.11	837.38	11/14/42	41.18	864.31	02/28/43	38.48	867.01	05/27/43	39.86	865.63
08/15/42	67.60	837.89	11/15/42	41.09	864.40	03/01/43	38.53	866.96	05/28/43	39.83	865.66
08/16/42	67.60	837.89	11/16/42	40.95	864.54	03/02/43	38.54	866.95	05/29/43	39.74	865.75
08/17/42	68.85	836.64	11/17/42	40.85	864.64	03/03/43	38.51	866.98	05/30/43	39.69	865.80
08/18/42	65.28	840.21	11/18/42	40.87	864.62	03/04/43	38.47	867.02	05/31/43	39.59	865.90
08/19/42	65.28	840.21	11/19/42	40.87	864.62	03/05/43	38.48	867.01	06/01/43	39.53	865.96
08/20/42	65.28	840.21	11/20/42	40.77	864.72	03/06/43	38.45	867.04	06/02/43	39.54	865.95
08/21/42	65.28	840.21	11/21/42	40.84	864.65	03/07/43	38.46	867.03	06/03/43	39.48	866.01
08/22/42	68.68	836.81	11/22/42	40.83	864.66	03/08/43	38.45	867.04	06/04/43	39.41	866.08
08/29/42	84.45	821.04	11/23/42	40.69	864.80	03/09/43	38.43	867.06	06/05/43	39.34	866.15
08/30/42	74.50	830.99	11/24/42	40.58	864.91	03/10/43	38.43	867.06	06/06/43	39.26	866.23
08/31/42	74.30	831.19	11/25/42	40.56	864.93	03/11/43	38.37	867.12	06/07/43	39.25	866.24
09/01/42	67.50	837.99	11/26/42	40.56	864.93	03/12/43	38.37	867.12	06/08/43	39.22	866.27
09/02/42	64.50	840.99	11/27/42	40.51	864.98	03/13/43	38.41	867.08	06/09/43	39.18	866.31
09/03/42	62.10	843.39	11/28/42	40.47	865.02	03/14/43	38.40	867.09	06/10/43	39.15	866.34
09/04/42	60.10	845.39	11/29/42	40.40	865.09	03/15/43	38.34	867.15	06/11/43	39.10	866.39
09/05/42	58.50	846.99	11/30/42	40.29	865.20	03/16/43	38.25	867.24	06/12/43	38.97	866.52
09/06/42	57.30	848.19	12/01/42	40.25	865.24	03/17/43	38.17	867.32	06/13/43	38.97	866.52
09/07/42	56.10	849.39	12/02/42	40.23	865.26	03/18/43	38.21	867.28	06/14/43	38.92	866.57
09/08/42	55.10	850.39	12/03/42	40.18	865.31	03/19/43	38.21	867.28	06/15/43	38.85	866.64
09/09/42	54.10	851.39	12/04/42	40.19	865.30	03/20/43	38.24	867.25	06/16/43	38.83	866.66
09/10/42	53.50	851.99	12/05/42	40.18	865.31	03/21/43	38.24	867.25	06/17/43	38.81	866.68

139-049-01CCD2 **(Continued)** MP Elev (msl,ft)=905.49

Fargo Aquifer SI (ft.)=0-196

Date	Depth to Water (ft)	WL Elev (msl, ft)	Date	Depth to Water (ft)	WL Elev (msl, ft)	Date	Depth to Water (ft)	WL Elev (msl, ft)	Date	Depth to Water (ft)	WL Elev (msl, ft)
06/18/43	38.78	866.71	09/07/43	37.93	867.56	11/26/43	38.24	867.25	02/13/44	38.39	867.10
06/19/43	38.74	866.75	09/08/43	37.98	867.51	11/27/43	38.24	867.25	02/14/44	38.41	867.08
06/20/43	38.72	866.77	09/09/43	38.00	867.49	11/28/43	38.21	867.28	02/15/44	38.45	867.04
06/21/43	38.76	866.73	09/10/43	38.02	867.47	11/29/43	38.22	867.27	02/16/44	38.40	867.09
06/22/43	38.77	866.72	09/11/43	38.01	867.48	11/30/43	38.19	867.30	02/17/44	38.44	867.05
06/23/43	38.70	866.79	09/12/43	38.01	867.48	12/01/43	38.28	867.21	02/18/44	38.45	867.04
06/24/43	38.69	866.80	09/13/43	37.98	867.51	12/02/43	38.33	867.16	02/19/44	38.43	867.06
06/25/43	38.63	866.86	09/14/43	37.94	867.55	12/03/43	38.30	867.19	02/20/44	38.41	867.08
06/26/43	38.60	866.89	09/15/43	38.00	867.49	12/04/43	38.29	867.20	02/21/44	38.39	867.10
06/27/43	38.57	866.92	09/16/43	38.05	867.44	12/05/43	38.28	867.21	02/22/44	38.41	867.08
06/28/43	38.51	866.98	09/17/43	38.04	867.45	12/06/43	38.30	867.19	02/23/44	38.36	867.13
06/29/43	38.54	866.95	09/18/43	37.97	867.52	12/07/43	38.25	867.24	02/24/44	38.38	867.11
06/30/43	38.51	866.98	09/19/43	38.01	867.48	12/08/43	38.24	867.25	02/25/44	38.39	867.10
07/01/43	38.48	867.01	09/20/43	38.02	867.47	12/09/43	38.33	867.16	02/26/44	38.38	867.11
07/02/43	38.46	867.03	09/21/43	37.96	867.53	12/10/43	38.33	867.16	02/27/44	38.44	867.05
07/03/43	38.44	867.05	09/22/43	38.04	867.45	12/11/43	38.30	867.19	02/28/44	38.45	867.04
07/04/43	38.42	867.07	09/23/43	38.07	867.42	12/12/43	38.32	867.17	02/29/44	38.47	867.02
07/05/43	38.42	867.07	09/24/43	38.05	867.44	12/13/43	38.33	867.16	03/01/44	38.46	867.03
07/06/43	38.42	867.07	09/25/43	38.05	867.44	12/14/43	38.37	867.12	03/02/44	38.40	867.09
07/07/43	38.40	867.09	09/26/43	38.02	867.47	12/15/43	38.36	867.13	03/03/44	38.44	867.05
07/08/43	38.40	867.09	09/27/43	38.00	867.49	12/16/43	38.35	867.14	03/04/44	38.43	867.06
07/09/43	38.40	867.09	09/28/43	38.04	867.45	12/17/43	38.34	867.15	03/05/44	38.39	867.10
07/10/43	38.36	867.13	09/29/43	38.03	867.46	12/18/43	38.35	867.14	03/06/44	38.30	867.19
07/11/43	38.33	867.16	09/30/43	38.06	867.43	12/19/43	38.36	867.13	03/07/44	38.34	867.15
07/12/43	38.31	867.18	10/01/43	38.09	867.40	12/20/43	38.36	867.13	03/08/44	38.39	867.10
07/13/43	38.33	867.16	10/02/43	38.10	867.39	12/21/43	38.34	867.15	03/09/44	38.40	867.09
07/14/43	38.28	867.21	10/03/43	38.08	867.41	12/22/43	38.40	867.09	03/10/44	38.31	867.18
07/15/43	38.27	867.22	10/04/43	38.10	867.39	12/23/43	38.42	867.07	03/11/44	38.31	867.18
07/16/43	38.27	867.22	10/05/43	38.11	867.38	12/24/43	38.34	867.15	03/12/44	38.37	867.12
07/17/43	38.29	867.20	10/06/43	38.12	867.37	12/25/43	38.32	867.17	03/13/44	38.38	867.11
07/18/43	38.29	867.20	10/07/43	38.10	867.39	12/26/43	38.37	867.12	03/14/44	38.37	867.12
07/19/43	38.26	867.23	10/08/43	38.08	867.41	12/27/43	38.40	867.09	03/15/44	38.36	867.13
07/20/43	38.25	867.24	10/09/43	38.06	867.43	12/28/43	38.41	867.08	03/16/44	38.30	867.19
07/21/43	38.27	867.22	10/10/43	38.06	867.43	12/29/43	38.37	867.12	03/17/44	38.32	867.17
07/22/43	38.28	867.21	10/11/43	38.01	867.48	12/30/43	38.34	867.15	03/18/44	38.37	867.12
07/23/43	38.26	867.23	10/12/43	37.99	867.50	12/31/43	38.37	867.12	03/19/44	38.35	867.14
07/24/43	38.32	867.17	10/13/43	37.99	867.50				03/20/44	38.31	867.18
07/25/43	38.34	867.15	10/14/43	38.04	867.45	01/01/44	38.34	867.15	03/21/44	38.35	867.14
07/26/43	38.33	867.16	10/15/43	38.08	867.41	01/02/44	38.34	867.15	03/22/44	38.36	867.13
07/27/43	38.32	867.17	10/16/43	38.05	867.44	01/03/44	38.35	867.14	03/23/44	38.26	867.23
07/28/43	38.27	867.22	10/17/43	38.02	867.47	01/04/44	38.42	867.07	03/24/44	38.25	867.24
07/29/43	38.24	867.25	10/18/43	38.01	867.48	01/05/44	38.42	867.07	03/25/44	38.28	867.21
07/30/43	38.26	867.23	10/19/43	38.00	867.49	01/06/44	38.44	867.05	03/26/44	38.28	867.21
07/31/43	38.25	867.24	10/20/43	38.00	867.49	01/07/44	38.48	867.01	03/27/44	38.28	867.21
08/01/43	38.22	867.27	10/21/43	38.03	867.46	01/08/44	38.46	867.03	03/28/44	38.28	867.21
08/02/43	38.26	867.23	10/22/43	38.05	867.44	01/09/44	38.36	867.13	03/29/44	38.24	867.25
08/03/43	38.25	867.24	10/23/43	38.07	867.42	01/10/44	38.37	867.12	03/30/44	38.21	867.28
08/04/43	38.26	867.23	10/24/43	38.11	867.38	01/11/44	38.43	867.06	03/31/44	38.21	867.28
08/05/43	38.28	867.21	10/25/43	38.13	867.36	01/12/44	38.47	867.02	04/01/44	38.26	867.23
08/06/43	38.27	867.22	10/26/43	38.11	867.38	01/13/44	38.44	867.05	04/02/44	38.29	867.20
08/07/43	38.27	867.22	10/27/43	38.06	867.43	01/14/44	38.41	867.08	04/03/44	38.29	867.20
08/08/43	38.26	867.23	10/28/43	38.03	867.46	01/15/44	38.44	867.05	04/04/44	38.28	867.21
08/10/43	37.93	867.56	10/29/43	38.09	867.40	01/16/44	38.45	867.04	04/05/44	38.28	867.21
08/11/43	37.93	867.56	10/30/43	38.07	867.42	01/17/44	38.46	867.03	04/06/44	38.22	867.27
08/12/43	37.93	867.56	10/31/43	38.01	867.48	01/18/44	38.40	867.09	04/07/44	38.21	867.28
08/13/43	37.94	867.55	11/01/43	38.06	867.43	01/19/44	38.44	867.05	04/08/44	38.20	867.29
08/14/43	37.95	867.54	11/02/43	38.08	867.41	01/20/44	38.42	867.07	04/09/44	38.24	867.25
08/15/43	37.96	867.53	11/03/43	38.07	867.42	01/21/44	38.43	867.06	04/10/44	38.27	867.22
08/16/43	37.99	867.50	11/04/43	38.05	867.44	01/22/44	38.47	867.02	04/11/44	38.25	867.24
08/17/43	38.01	867.48	11/05/43	38.09	867.40	01/23/44	38.47	867.02	04/12/44	38.24	867.25
08/18/43	37.99	867.50	11/06/43	38.12	867.37	01/24/44	38.38	867.11	04/13/44	38.21	867.28
08/19/43	37.95	867.54	11/07/43	38.13	867.36	01/25/44	38.39	867.10	04/14/44	38.18	867.31
08/20/43	37.95	867.54	11/08/43	38.10	867.39	01/26/44	38.50	866.99	04/15/44	38.21	867.28
08/21/43	37.95	867.54	11/09/43	38.12	867.37	01/27/44	38.50	866.99	04/16/44	38.22	867.27
08/22/43	37.95	867.54	11/10/43	38.15	867.34	01/28/44	38.40	867.09	04/17/44	38.24	867.25
08/23/43	37.94	867.55	11/11/43	38.12	867.37	01/29/44	38.41	867.08	04/18/44	38.24	867.25
08/24/43	37.94	867.55	11/12/43	38.15	867.34	01/30/44	38.40	867.09	04/19/44	38.22	867.27
08/25/43	37.97	867.52	11/13/43	38.17	867.32	01/31/44	38.45	867.04	04/20/44	38.21	867.28
08/26/43	37.86	867.63	11/14/43	38.18	867.31	02/01/44	38.45	867.04	04/21/44	38.24	867.25
08/27/43	37.97	867.52	11/15/43	38.18	867.31	02/02/44	38.38	867.11	04/22/44	38.23	867.26
08/28/43	37.95	867.54	11/16/43	38.16	867.33	02/03/44	38.44	867.05	04/23/44	38.20	867.29
08/29/43	37.95	867.54	11/17/43	38.09	867.40	02/04/44	38.42	867.07	04/24/44	38.12	867.37
08/30/43	37.95	867.54	11/18/43	38.14	867.35	02/05/44	38.41	867.08	04/25/44	38.14	867.35
08/31/43	37.92	867.57	11/19/43	38.18	867.31	02/06/44	38.40	867.09	04/26/44	38.18	867.31
09/01/43	37.93	867.56	11/20/43	38.17	867.32	02/07/44	38.39	867.10	04/27/44	38.20	867.29
09/02/43	37.93	867.56	11/21/43	38.25	867.24	02/08/44	38.41	867.08	04/28/44	38.19	867.30
09/03/43	37.97	867.52	11/22/43	38.26	867.23	02/09/44	38.44	867.05	04/29/44	38.16	867.33
09/04/43	37.96	867.53	11/23/43	38.28	867.21	02/10/44	38.48	867.01	04/30/44	38.12	867.37
09/05/43	37.92	867.57	11/24/43	38.28	867.21	02/11/44	38.49	867.00	05/01/44	38.07	867.42
09/06/43	37.92	867.57	11/25/43	38.23	867.26	02/12/44	38.46	867.03	05/02/44	38.10	867.39

139-049-01CCD2 **(Continued)** MP Elev (msl,ft)=905.49

Fargo Aquifer SI (ft.)=0-196

Date	Depth to Water (ft)	WL Elev (msl, ft)
05/03/44	38.07	867.42
05/04/44	38.11	867.38
05/05/44	38.10	867.39
05/06/44	38.08	867.41
05/07/44	38.07	867.42
05/08/44	38.06	867.43
05/09/44	38.07	867.42
05/10/44	38.06	867.43
05/11/44	38.06	867.43
05/12/44	38.00	867.49
05/13/44	37.93	867.56
05/14/44	37.92	867.57
05/15/44	37.91	867.58
05/16/44	37.86	867.63
05/17/44	37.87	867.62
05/18/44	37.89	867.60
05/19/44	37.88	867.61
05/20/44	37.89	867.60
05/21/44	37.87	867.62
05/22/44	37.82	867.67
05/23/44	37.84	867.65
05/24/44	37.85	867.64
05/25/44	37.83	867.66
05/26/44	37.90	867.59
05/27/44	37.90	867.59
05/28/44	37.89	867.60
05/29/44	37.87	867.62
05/30/44	37.85	867.64
05/31/44	37.85	867.64
06/01/44	37.83	867.66
06/02/44	37.80	867.69
06/03/44	37.79	867.70
06/04/44	37.67	867.82
06/05/44	37.73	867.76
06/06/44	37.77	867.72
06/07/44	37.77	867.72
06/08/44	37.85	867.64
06/09/44	37.83	867.66
06/10/44	37.83	867.66
06/11/44	37.80	867.69
06/12/44	37.76	867.73
06/13/44	37.74	867.75
06/14/44	37.74	867.75
06/15/44	37.74	867.75
06/16/44	37.78	867.71
06/17/44	37.80	867.69
06/18/44	37.77	867.72
06/19/44	37.81	867.68
06/20/44	37.79	867.70
06/21/44	37.77	867.72
06/22/44	37.79	867.70
06/23/44	37.77	867.72
06/24/44	37.76	867.73
06/25/44	37.74	867.75
06/26/44	37.75	867.74
06/27/44	37.73	867.76
06/28/44	37.84	867.65
06/29/44	37.87	867.62
06/30/44	37.86	867.63
07/01/44	37.82	867.67
07/02/44	37.80	867.69
07/03/44	37.81	867.68
07/04/44	37.71	867.78
07/05/44	37.60	867.89
07/06/44	37.55	867.94
07/07/44	37.59	867.90
07/08/44	37.67	867.82
07/09/44	37.66	867.83
07/10/44	37.64	867.85
07/11/44	37.60	867.89
07/12/44	37.62	867.87
07/13/44	37.63	867.86
07/14/44	37.60	867.89
07/21/44	37.67	867.82
07/22/44	37.63	867.86
07/23/44	37.64	867.85
07/24/44	37.65	867.84
07/25/44	37.65	867.84
07/26/44	37.65	867.84
07/27/44	37.67	867.82
07/28/44	37.68	867.81
07/29/44	37.70	867.79
07/30/44	37.69	867.80
07/31/44	37.72	867.77
08/01/44	37.76	867.73
08/02/44	37.77	867.72
08/04/44	37.44	868.05
08/05/44	37.51	867.98
08/06/44	37.52	867.97
08/07/44	37.52	867.97
08/08/44	37.56	867.93
08/09/44	37.56	867.93
08/10/44	37.60	867.89
08/11/44	37.72	867.77
08/12/44	37.72	867.77
08/13/44	37.71	867.78
08/14/44	37.74	867.75
08/15/44	37.70	867.79
08/16/44	37.72	867.77
08/17/44	37.75	867.74
08/18/44	37.72	867.77
08/19/44	37.69	867.80
08/20/44	37.73	867.76
08/21/44	37.76	867.73
08/22/44	37.78	867.71
08/23/44	37.81	867.68
08/24/44	37.81	867.68
08/25/44	37.78	867.71
08/26/44	37.75	867.74
08/27/44	37.73	867.76
08/28/44	37.72	867.77
08/29/44	37.70	867.79
08/30/44	37.69	867.80
08/31/44	37.68	867.81
09/01/44	37.64	867.85
09/02/44	37.67	867.82
09/03/44	37.69	867.80
09/04/44	37.73	867.76
09/05/44	37.78	867.71
09/06/44	37.80	867.69
09/07/44	37.81	867.68
09/08/44	37.80	867.69
09/09/44	37.78	867.71
09/10/44	37.78	867.71
09/11/44	37.80	867.69
09/12/44	37.83	867.66
09/13/44	37.83	867.66
09/14/44	37.82	867.67
09/15/44	37.82	867.67
09/16/44	37.84	867.65
09/17/44	37.83	867.66
09/18/44	37.88	867.61
09/19/44	37.90	867.59
09/20/44	37.87	867.62
09/21/44	37.95	867.54
09/22/44	37.97	867.52
09/23/44	37.98	867.51
09/24/44	37.95	867.54
09/25/44	37.94	867.55
09/27/44	38.10	867.39
09/28/44	38.07	867.42
09/29/44	38.04	867.45
09/30/44	38.05	867.44
10/01/44	38.09	867.40
10/02/44	38.07	867.42
10/03/44	38.04	867.45
10/04/44	37.99	867.50
10/05/44	37.97	867.52
10/06/44	38.00	867.49
10/07/44	38.07	867.42
10/08/44	38.09	867.40
10/09/44	38.10	867.39
10/11/44	38.34	867.15
10/12/44	38.19	867.30
10/13/44	38.17	867.32
10/14/44	38.20	867.29
10/15/44	38.21	867.28
10/16/44	38.21	867.28
10/17/44	38.18	867.31
10/18/44	38.19	867.30
10/19/44	38.20	867.29
10/20/44	38.20	867.29
10/21/44	38.24	867.25
10/22/44	38.18	867.31
10/23/44	38.15	867.34
10/24/44	38.15	867.34
10/25/44	38.19	867.30
10/26/44	38.23	867.26
10/27/44	38.25	867.24
10/28/44	38.29	867.20
10/29/44	38.28	867.21
10/30/44	38.23	867.26
10/31/44	38.19	867.30
11/01/44	38.18	867.31
11/02/44	38.22	867.27
11/03/44	38.29	867.20
11/04/44	38.29	867.20
11/05/44	38.27	867.22
11/06/44	38.23	867.26
11/07/44	38.20	867.29
11/08/44	38.15	867.34
11/09/44	38.18	867.31
11/10/44	38.20	867.29
11/11/44	38.17	867.32
11/12/44	38.19	867.30
11/13/44	38.18	867.31
11/14/44	38.15	867.34
11/15/44	38.21	867.28
11/16/44	38.24	867.25
11/17/44	38.25	867.24
11/18/44	38.25	867.24
11/19/44	38.24	867.25
11/20/44	38.25	867.24
11/21/44	38.26	867.23
11/22/44	38.25	867.24
11/23/44	38.23	867.26
11/24/44	38.23	867.26
11/25/44	38.24	867.25
11/26/44	38.22	867.27
11/27/44	38.27	867.22
11/28/44	38.26	867.23
11/29/44	38.28	867.21
11/30/44	38.32	867.17
12/01/44	38.36	867.13
12/02/44	38.31	867.18
12/03/44	38.29	867.20
12/04/44	38.31	867.18
12/05/44	38.42	867.07
12/06/44	38.29	867.20
12/07/44	38.31	867.18
12/08/44	38.34	867.15
12/09/44	38.38	867.11
12/10/44	38.40	867.09
12/11/44	38.40	867.09
12/12/44	38.40	867.09
12/13/44	38.42	867.07
12/14/44	38.40	867.09
12/15/44	38.40	867.09
12/16/44	38.41	867.08
12/17/44	38.46	867.03
12/18/44	38.45	867.04
12/19/44	38.47	867.02
12/20/44	38.51	866.98
12/21/44	38.54	866.95
12/22/44	38.51	866.98
12/23/44	38.51	866.98
12/24/44	38.51	866.98
12/25/44	38.52	866.97
12/26/44	38.58	866.91
12/27/44	38.56	866.93
12/28/44	38.61	866.88
12/29/44	38.53	866.96
12/30/44	38.58	866.91
12/31/44	38.60	866.89
01/01/45	38.62	866.87
01/02/45	38.61	866.88
01/03/45	38.63	866.86
01/04/45	38.66	866.83
01/05/45	38.67	866.82
01/06/45	38.65	866.84
01/07/45	38.65	866.84
01/08/45	38.73	866.76
01/09/45	38.73	866.76
01/10/45	38.72	866.77
01/11/45	38.70	866.79
01/12/45	38.69	866.80
01/13/45	38.70	866.79
01/14/45	38.73	866.76
01/15/45	38.75	866.74
01/16/45	38.77	866.72
01/17/45	38.77	866.72
01/18/45	38.79	866.70
01/19/45	38.82	866.67
01/20/45	38.83	866.66
01/21/45	38.80	866.69
01/22/45	38.83	866.66
01/23/45	38.84	866.65
01/24/45	38.85	866.64
01/25/45	38.88	866.61
01/26/45	38.90	866.59
01/27/45	38.91	866.58
01/28/45	38.92	866.57
01/29/45	38.93	866.56
01/30/45	38.98	866.51
01/31/45	39.01	866.48
02/01/45	39.02	866.47
02/02/45	39.00	866.49
02/03/45	38.97	866.52
02/04/45	39.02	866.47
02/05/45	39.02	866.47
02/06/45	39.04	866.45
02/07/45	39.05	866.44
02/08/45	39.03	866.46
02/09/45	39.01	866.48
02/10/45	39.02	866.47
02/11/45	39.02	866.47
02/12/45	39.04	866.45
02/13/45	39.00	866.49
02/14/45	39.03	866.46
02/15/45	39.10	866.39
02/16/45	39.12	866.37
02/17/45	39.13	866.36
02/18/45	39.17	866.32
02/19/45	39.17	866.32
02/20/45	39.12	866.37
02/21/45	39.10	866.39
02/22/45	39.11	866.38
02/23/45	39.13	866.36
02/24/45	39.19	866.30
02/25/45	39.19	866.30
02/26/45	39.15	866.34
02/27/45	39.17	866.32
02/28/45	39.15	866.34
03/01/45	39.15	866.34
03/02/45	39.17	866.32
03/03/45	39.20	866.29
03/04/45	39.22	866.27
03/05/45	39.23	866.26
03/06/45	39.24	866.25
03/07/45	39.25	866.24
03/08/45	39.25	866.24
03/09/45	39.27	866.22
03/10/45	39.27	866.22
03/11/45	39.24	866.25
03/12/45	39.22	866.27
03/21/45	39.31	866.18
03/22/45	39.31	866.18
03/23/45	39.30	866.19
03/24/45	39.29	866.20
03/25/45	39.29	866.20
03/26/45	39.27	866.22
03/27/45	39.25	866.24
03/28/45	39.29	866.20
03/29/45	39.35	866.14
03/30/45	39.40	866.09
03/31/45	39.35	866.14
04/01/45	39.33	866.16
04/02/45	39.38	866.11
04/03/45	39.39	866.10

139-049-01CCD2 **(Continued)** MP Elev (msl,ft)=905.49

Fargo Aquifer SI (ft.)=0-196

Date	Depth to Water (ft)	WL Elev (msl, ft)	Date	Depth to Water (ft)	WL Elev (msl, ft)	Date	Depth to Water (ft)	WL Elev (msl, ft)	Date	Depth to Water (ft)	WL Elev (msl, ft)
04/04/45	39.39	866.10	06/23/45	39.75	865.74	09/11/45	40.69	864.80	12/17/45	41.57	863.92
04/05/45	39.39	866.10	06/24/45	39.80	865.69	09/12/45	40.73	864.76	12/18/45	41.57	863.92
04/06/45	39.39	866.10	06/25/45	39.82	865.67	09/13/45	40.77	864.72	12/19/45	41.54	863.95
04/07/45	39.43	866.06	06/26/45	39.80	865.69	09/14/45	40.77	864.72	12/20/45	41.56	863.93
04/08/45	39.41	866.08	06/27/45	40.30	865.19	09/15/45	40.81	864.68	12/21/45	41.60	863.89
04/09/45	39.39	866.10	06/28/45	39.90	865.59	09/16/45	40.78	864.71	12/22/45	41.63	863.86
04/10/45	39.41	866.08	06/29/45	39.90	865.59	09/17/45	40.73	864.76	12/23/45	41.59	863.90
04/11/45	39.35	866.14	06/30/45	39.98	865.51	09/18/45	40.75	864.74	12/24/45	41.51	863.98
04/12/45	39.42	866.07	07/01/45	40.00	865.49	09/19/45	40.71	864.78	12/25/45	41.49	864.00
04/13/45	39.50	865.99	07/02/45	39.99	865.50	09/20/45	40.73	864.76	12/26/45	41.52	863.97
04/14/45	39.52	865.97	07/03/45	39.94	865.55	09/29/45	40.88	864.61	12/27/45	41.51	863.98
04/15/45	39.48	866.01	07/04/45	39.94	865.55	09/30/45	40.86	864.63	12/28/45	41.48	864.01
04/16/45	39.39	866.10	07/05/45	39.96	865.53	10/01/45	40.85	864.64	12/29/45	41.50	863.99
04/17/45	39.37	866.12	07/06/45	39.98	865.51	10/02/45	40.90	864.59	12/30/45	41.53	863.96
04/18/45	39.43	866.06	07/07/45	39.99	865.50	10/03/45	40.88	864.61	12/31/45	41.57	863.92
04/19/45	39.43	866.06	07/08/45	39.97	865.52	10/04/45	40.86	864.63			
04/20/45	39.45	866.04	07/09/45	40.00	865.49	10/05/45	40.86	864.63	01/04/46	41.49	864.00
04/21/45	39.47	866.02	07/10/45	40.04	865.45	10/06/45	39.91	865.58	01/05/46	41.48	864.01
04/22/45	39.44	866.05	07/11/45	40.01	865.48	10/07/45	40.89	864.60	01/06/46	41.57	863.92
04/23/45	39.40	866.09	07/12/45	40.03	865.46	10/08/45	41.01	864.48	01/07/46	41.59	863.90
04/24/45	39.40	866.09	07/13/45	40.06	865.43	10/09/45	40.93	864.56	01/08/46	41.57	863.92
04/25/45	39.43	866.06	07/14/45	40.08	865.41	10/10/45	40.90	864.59	01/09/46	41.60	863.89
04/26/45	39.45	866.04	07/15/45	40.07	865.42	10/11/45	40.93	864.56	01/10/46	41.58	863.91
04/27/45	39.45	866.04	07/16/45	40.07	865.42	10/12/45	40.98	864.51	01/11/46	41.87	863.62
04/28/45	39.45	866.04	07/17/45	40.11	865.38	10/13/45	40.99	864.50	01/12/46	41.80	863.69
04/29/45	39.50	865.99	07/18/45	40.11	865.38	10/14/45	40.99	864.50	01/13/46	41.70	863.79
04/30/45	39.51	865.98	07/19/45	40.12	865.37	10/15/45	40.99	864.50	01/14/46	41.92	863.57
05/01/45	39.48	866.01	07/20/45	40.14	865.35	10/16/45	40.95	864.54	01/15/46	41.84	863.65
05/02/45	39.48	866.01	07/21/45	40.16	865.33	10/17/45	40.95	864.54	01/16/46	41.77	863.72
05/03/45	39.50	865.99	07/22/45	40.20	865.29	10/18/45	40.95	864.54	01/17/46	41.84	863.65
05/04/45	39.49	866.00	07/23/45	40.19	865.30	10/19/45	40.98	864.51	01/18/46	41.74	863.75
05/05/45	39.47	866.02	07/24/45	40.23	865.26	10/20/45	41.00	864.49	01/19/46	41.80	863.69
05/06/45	39.44	866.05	07/25/45	40.28	865.21	10/21/45	41.03	864.46	01/20/46	41.71	863.78
05/07/45	39.46	866.03	07/26/45	40.33	865.16	10/22/45	41.04	864.45	01/21/46	41.88	863.61
05/08/45	39.50	865.99	07/27/45	40.36	865.13	10/23/45	41.06	864.43	01/22/46	41.70	863.79
05/09/45	39.50	865.99	07/28/45	40.33	865.16	10/24/45	41.06	864.43	01/23/46	41.75	863.74
05/10/45	39.50	865.99	07/29/45	40.32	865.17	10/25/45	41.06	864.43	01/24/46	41.71	863.78
05/11/45	39.47	866.02	07/30/45	40.33	865.16	10/26/45	41.08	864.41	01/25/46	41.77	863.72
05/12/45	39.49	866.00	07/31/45	40.35	865.14	10/27/45	41.07	864.42	01/26/46	41.67	863.82
05/13/45	39.52	865.97	08/01/45	40.39	865.10	10/28/45	41.08	864.41	01/27/46	41.81	863.68
05/14/45	39.53	865.96	08/02/45	40.42	865.07	10/29/45	41.15	864.34	01/28/46	41.69	863.80
05/15/45	39.55	865.94	08/03/45	40.41	865.08	10/30/45	41.09	864.40	01/29/46	41.72	863.77
05/16/45	39.55	865.94	08/04/45	40.40	865.09	10/31/45	42.08	863.41	01/30/46	41.66	863.83
05/17/45	39.56	865.93	08/05/45	40.33	865.16	11/01/45	41.05	864.44	01/31/46	41.82	863.67
05/18/45	39.58	865.91	08/06/45	40.37	865.12	11/02/45	41.14	864.35	02/01/46	41.70	863.79
05/19/45	39.56	865.93	08/07/45	40.42	865.07	11/03/45	41.16	864.33	02/02/46	41.77	863.72
05/20/45	39.52	865.97	08/08/45	40.42	865.07	11/04/45	41.14	864.35	02/03/46	41.72	863.77
05/21/45	39.52	865.97	08/09/45	40.40	865.09	11/05/45	41.12	864.37	02/04/46	41.71	863.78
05/22/45	39.56	865.93	08/10/45	40.38	865.11	11/06/45	41.15	864.34	02/05/46	41.62	863.87
05/23/45	39.58	865.91	08/11/45	40.40	865.09	11/07/45	41.17	864.32	02/06/46	41.55	863.94
05/24/45	39.56	865.93	08/12/45	40.40	865.09	11/08/45	41.17	864.32	02/07/46	41.47	864.02
05/25/45	39.61	865.88	08/13/45	40.36	865.13	11/09/45	41.60	863.89	02/08/46	41.57	863.92
05/26/45	39.63	865.86	08/14/45	40.40	865.09	11/10/45	41.35	864.14	02/09/46	41.62	863.87
05/27/45	39.62	865.87	08/15/45	40.41	865.08	11/11/45	41.28	864.21	02/10/46	41.51	863.98
05/28/45	39.62	865.87	08/16/45	40.39	865.10	11/12/45	41.24	864.25	02/11/46	41.56	863.93
05/29/45	39.65	865.84	08/17/45	40.39	865.10	11/13/45	41.31	864.18	02/12/46	41.51	863.98
05/30/45	39.62	865.87	08/18/45	40.42	865.07	11/15/45	41.31	864.18	02/13/46	41.62	863.87
05/31/45	39.60	865.89	08/19/45	40.42	865.07	11/24/45	41.31	864.18	02/14/46	41.54	863.95
06/01/45	39.51	865.98	08/20/45	40.43	865.06	11/25/45	41.31	864.18	02/15/46	41.52	863.97
06/02/45	39.57	865.92	08/21/45	40.48	865.01	11/26/45	41.29	864.20	02/16/46	41.68	863.81
06/03/45	39.59	865.90	08/22/45	40.51	864.98	11/27/45	41.34	864.15	02/17/46	41.61	863.88
06/04/45	39.60	865.89	08/23/45	40.49	865.00	11/28/45	41.36	864.13	02/18/46	41.58	863.91
06/05/45	40.09	865.40	08/24/45	40.52	864.97	11/29/45	41.36	864.13	02/19/46	41.71	863.78
06/06/45	39.70	865.79	08/25/45	40.53	864.96	11/30/45	41.35	864.14	02/20/46	41.58	863.91
06/07/45	39.67	865.82	08/26/45	40.49	865.00	12/01/45	41.38	864.11	02/21/46	41.52	863.97
06/08/45	39.65	865.84	08/27/45	40.50	864.99	12/02/45	41.41	864.08	02/22/46	41.67	863.82
06/09/45	39.63	865.86	08/28/45	40.54	864.95	12/03/45	41.42	864.07	02/23/46	41.66	863.83
06/10/45	39.60	865.89	08/29/45	40.59	864.90	12/04/45	41.42	864.07	02/24/46	41.55	863.94
06/11/45	39.63	865.86	08/30/45	40.62	864.87	12/05/45	41.36	864.13	02/25/46	41.55	863.94
06/12/45	39.63	865.86	08/31/45	40.61	864.88	12/06/45	41.33	864.16	02/26/46	41.67	863.82
06/13/45	39.63	865.86	09/01/45	40.68	864.81	12/07/45	41.33	864.16	02/27/46	41.55	863.94
06/14/45	39.65	865.84	09/02/45	40.68	864.81	12/08/45	41.45	864.04	02/28/46	41.55	863.94
06/15/45	39.69	865.80	09/03/45	40.64	864.85	12/09/45	41.45	864.04	03/01/46	41.54	863.95
06/16/45	39.70	865.79	09/04/45	40.68	864.81	12/10/45	41.47	864.02	03/02/46	41.68	863.81
06/17/45	39.69	865.80	09/05/45	40.65	864.84	12/11/45	41.48	864.01	03/03/46	41.60	863.89
06/18/45	39.70	865.79	09/06/45	40.67	864.82	12/12/45	41.45	864.04	03/04/46	41.80	863.69
06/19/45	39.67	865.82	09/07/45	40.70	864.79	12/13/45	41.43	864.06	03/05/46	41.71	863.78
06/20/45	39.71	865.78	09/08/45	40.65	864.84	12/14/45	41.50	863.99	03/06/46	41.69	863.80
06/21/45	39.70	865.79	09/09/45	40.64	864.85	12/15/45	41.51	863.98	03/07/46	41.84	863.65
06/22/45	39.72	865.77	09/10/45	40.67	864.82	12/16/45	41.54	863.95	03/08/46	41.69	863.80

139-049-01CCD2 **(Continued)** MP Elev (msl,ft)=905.49

Fargo Aquifer SI (ft.)=0-196

Date	Depth to Water (ft)	WL Elev (msl, ft)	Date	Depth to Water (ft)	WL Elev (msl, ft)	Date	Depth to Water (ft)	WL Elev (msl, ft)	Date	Depth to Water (ft)	WL Elev (msl, ft)
03/09/46	41.77	863.72	05/28/46	42.06	863.43	09/29/46	54.77	850.72	12/18/46	45.84	859.65
03/10/46	41.67	863.82	05/29/46	42.06	863.43	09/30/46	54.37	851.12	12/19/46	45.83	859.66
03/11/46	41.72	863.77	05/30/46	42.00	863.49	10/01/46	53.99	851.50	12/20/46	45.69	859.80
03/12/46	41.73	863.76	05/31/46	41.92	863.57	10/02/46	53.73	851.76	12/21/46	45.72	859.77
03/13/46	41.63	863.86	06/01/46	41.94	863.55	10/03/46	53.31	852.18	12/22/46	45.72	859.77
03/14/46	41.66	863.83	06/02/46	41.93	863.56	10/04/46	53.08	852.41	12/23/46	45.65	859.84
03/15/46	41.76	863.73	06/03/46	42.05	863.44	10/05/46	52.82	852.67	12/24/46	45.65	859.84
03/16/46	41.79	863.70	06/04/46	42.09	863.40	10/06/46	52.45	853.04	12/25/46	45.61	859.88
03/17/46	41.68	863.81	06/05/46	42.07	863.42	10/07/46	52.28	853.21	12/26/46	45.60	859.89
03/18/46	41.71	863.78	06/06/46	41.96	863.53	10/08/46	51.94	853.55	12/27/46	45.51	859.98
03/19/46	41.71	863.78	06/07/46	42.00	863.49	10/09/46	51.72	853.77	12/28/46	45.55	859.94
03/20/46	41.74	863.75	06/08/46	41.93	863.56	10/10/46	51.46	854.03	12/29/46	45.54	859.95
03/21/46	41.74	863.75	06/09/46	41.99	863.50	10/11/46	51.27	854.22	12/30/46	45.50	859.99
03/22/46	41.85	863.64	06/10/46	41.98	863.51	10/12/46	51.11	854.38	12/31/46	45.50	859.99
03/23/46	41.90	863.59	06/11/46	41.99	863.50	10/13/46	50.94	854.55			
03/24/46	41.72	863.77	06/12/46	41.99	863.50	10/14/46	50.78	854.71	01/20/47	44.91	860.58
03/25/46	41.77	863.72	06/13/46	42.09	863.40	10/15/46	50.60	854.89	01/21/47	44.93	860.56
03/26/46	41.85	863.64	06/14/46	42.12	863.37	10/16/46	50.46	855.03	01/22/47	44.93	860.56
03/27/46	41.84	863.65	06/15/46	42.07	863.42	10/17/46	50.28	855.21	01/23/47	44.82	860.67
03/28/46	41.80	863.69	06/16/46	41.94	863.55	10/18/46	50.09	855.40	01/24/47	44.79	860.70
03/29/46	41.80	863.69	06/17/46	42.00	863.49	10/19/46	50.00	855.49	01/25/47	44.70	860.79
03/30/46	41.85	863.64	06/18/46	42.03	863.46	10/20/46	49.85	855.64	01/26/47	44.70	860.79
03/31/46	41.80	863.69	06/19/46	42.03	863.46	10/21/46	49.70	855.79	01/27/47	44.74	860.75
04/01/46	41.81	863.68	06/20/46	41.99	863.50	10/22/46	49.56	855.93	01/28/47	44.75	860.74
04/02/46	41.91	863.58	06/21/46	41.95	863.54	10/23/46	49.43	856.06	01/29/47	44.73	860.76
04/03/46	41.83	863.66	06/22/46	41.84	863.65	10/24/46	49.31	856.18	01/30/47	44.70	860.79
04/04/46	41.75	863.74	06/23/46	41.93	863.56	10/25/46	49.11	856.38	01/31/47	44.72	860.77
04/05/46	41.73	863.76	06/24/46	42.02	863.47	10/26/46	49.02	856.47	04/21/47	43.68	861.81
04/06/46	41.83	863.66	06/25/46	41.87	863.62	10/27/46	49.00	856.49	04/22/47	43.69	861.80
04/07/46	41.69	863.80	06/26/46	41.89	863.60	10/28/46	48.86	856.63	04/23/47	43.60	861.89
04/08/46	41.83	863.66	06/27/46	41.89	863.60	10/29/46	48.76	856.73	04/24/47	43.60	861.89
04/09/46	41.86	863.63	06/28/46	41.87	863.62	10/30/46	48.59	856.90	04/25/47	43.61	861.88
04/10/46	41.77	863.72	06/29/46	41.94	863.55	10/31/46	48.54	856.95	04/26/47	43.60	861.89
04/11/46	41.85	863.64	06/30/46	41.94	863.55	11/01/46	48.45	857.04	04/27/47	43.59	861.90
04/12/46	41.83	863.66	07/01/46	41.89	863.60	11/02/46	48.40	857.09	04/28/47	43.58	861.91
04/13/46	41.74	863.75	07/02/46	41.99	863.50	11/03/46	48.39	857.10	04/29/47	43.52	861.97
04/14/46	41.74	863.75	07/03/46	42.00	863.49	11/04/46	48.28	857.21	04/30/47	43.48	862.01
04/15/46	41.86	863.63	07/04/46	41.87	863.62	11/05/46	48.22	857.27	05/20/47	43.48	862.01
04/16/46	41.91	863.58	07/05/46	41.91	863.58	11/06/46	48.10	857.39	05/21/47	43.46	862.03
04/17/46	41.86	863.63	07/06/46	41.90	863.59	11/07/46	47.96	857.53	05/22/47	43.42	862.07
04/18/46	41.91	863.58	07/07/46	41.88	863.61	11/08/46	47.85	857.64	05/23/47	43.41	862.08
04/19/46	41.96	863.53	07/08/46	42.03	863.46	11/09/46	47.84	857.65	08/20/47	86.10	819.39
04/20/46	41.86	863.63	07/09/46	41.99	863.50	11/10/46	47.78	857.71	08/27/47	85.30	820.19
04/21/46	41.86	863.63	07/10/46	42.01	863.48	11/11/46	47.68	857.81	09/26/47	57.94	847.55
04/22/46	41.91	863.58	07/11/46	42.15	863.34	11/12/46	47.62	857.87	10/25/47	52.64	852.85
04/23/46	41.91	863.58	07/12/46	42.15	863.34	11/13/46	47.57	857.92	10/26/47	52.60	852.89
04/24/46	41.91	863.58	07/13/46	42.14	863.35	11/14/46	47.48	858.01	10/27/47	52.44	853.05
04/25/46	41.87	863.62	07/14/46	42.07	863.42	11/15/46	47.42	858.07	10/28/47	52.28	853.21
04/26/46	41.93	863.56	07/15/46	42.20	863.29	11/16/46	48.80	856.69	10/29/47	52.23	853.26
04/27/46	41.84	863.65	07/16/46	42.11	863.38	11/17/46	47.55	857.94	10/30/47	52.17	853.32
04/28/46	41.82	863.67	07/17/46	42.06	863.43	11/18/46	47.48	858.01	10/31/47	52.00	853.49
04/29/46	41.86	863.63	07/18/46	42.07	863.42	11/19/46	47.28	858.21	11/20/47	50.34	855.15
04/30/46	41.93	863.56	07/19/46	42.18	863.31	11/20/46	47.22	858.27	11/21/47	50.26	855.23
05/01/46	41.93	863.56	07/20/46	42.20	863.29	11/21/46	47.07	858.42	11/22/47	50.13	855.36
05/02/46	41.90	863.59	07/21/46	42.14	863.35	11/22/46	47.05	858.44	11/23/47	50.06	855.43
05/03/46	41.91	863.58	07/22/46	42.19	863.30	11/23/46	47.02	858.47	11/24/47	49.93	855.56
05/04/46	41.88	863.61	07/23/46	42.24	863.25	11/24/46	46.85	858.64	11/25/47	49.87	855.62
05/05/46	41.88	863.61	07/24/46	42.26	863.23	11/25/46	46.87	858.62	12/20/47	48.67	856.82
05/06/46	41.89	863.60	07/25/46	42.31	863.18	11/26/46	46.80	858.69	12/21/47	48.65	856.84
05/07/46	41.89	863.60	07/26/46	42.33	863.16	11/27/46	46.77	858.72	12/22/47	48.57	856.92
05/08/46	41.90	863.59	07/27/46	42.30	863.19	11/28/46	46.66	858.83	12/23/47	48.59	856.90
05/09/46	41.95	863.54	07/28/46	42.24	863.25	11/29/46	46.62	858.87	12/24/47	48.55	856.94
05/10/46	41.87	863.62	07/29/46	42.39	863.10	11/30/46	46.61	858.88	12/25/47	48.52	856.97
05/11/46	41.89	863.60	07/30/46	42.39	863.10	12/01/46	46.55	858.94	12/26/47	48.45	857.04
05/12/46	41.91	863.58	07/31/46	42.41	863.08	12/02/46	46.50	858.99	12/27/47	48.41	857.08
05/13/46	41.86	863.63	08/01/46	46.80	858.69	12/03/46	46.45	859.04	12/28/47	48.29	857.20
05/14/46	41.83	863.66	09/12/46	66.60	838.89	12/04/46	46.58	858.91	12/29/47	48.31	857.18
05/15/46	41.97	863.52	09/13/46	64.72	840.77	12/05/46	46.44	859.05	12/30/47	48.28	857.21
05/16/46	41.89	863.60	09/14/46	63.32	842.17	12/06/46	46.35	859.14	12/31/47	48.13	857.36
05/17/46	41.84	863.65	09/15/46	62.10	843.39	12/07/46	46.35	859.14			
05/18/46	41.78	863.71	09/16/46	61.02	844.47	12/08/46	46.28	859.21	01/10/48	48.02	857.47
05/19/46	41.84	863.65	09/20/46	60.40	845.09	12/09/46	46.20	859.29	01/11/48	47.91	857.58
05/20/46	41.84	863.65	09/21/46	59.28	846.21	12/10/46	46.20	859.29	01/12/48	47.96	857.53
05/21/46	41.89	863.60	09/22/46	58.37	847.12	12/11/46	46.08	859.41	01/13/48	47.95	857.54
05/22/46	41.82	863.67	09/23/46	57.70	847.79	12/12/46	46.05	859.44	01/14/48	47.94	857.55
05/23/46	41.79	863.70	09/24/46	57.04	848.45	12/13/46	46.05	859.44	01/15/48	47.82	857.67
05/24/46	41.94	863.55	09/25/46	56.39	849.10	12/14/46	46.01	859.48	01/16/48	47.92	857.57
05/25/46	41.84	863.65	09/26/46	56.00	849.49	12/15/46	45.95	859.54	02/01/48	47.45	858.04
05/26/46	41.84	863.65	09/27/46	55.48	850.01	12/16/46	45.85	859.64	02/02/48	47.45	858.04
05/27/46	41.99	863.50	09/28/46	55.17	850.32	12/17/46	45.85	859.64	02/03/48	47.46	858.03

139-049-01CCD2 **(Continued)** MP Elev (msl,ft)=905.49

Fargo Aquifer SI (ft.)=0-196

Date	Depth to Water (ft)	WL Elev (msl, ft)
02/04/48	47.38	858.11
02/05/48	47.38	858.11
02/06/48	47.36	858.13
02/07/48	47.35	858.14
02/14/48	47.19	858.30
02/15/48	47.16	858.33
02/16/48	47.08	858.41
02/17/48	47.08	858.41
02/18/48	47.08	858.41
02/19/48	47.07	858.42
02/20/48	47.07	858.42
02/21/48	47.04	858.45
02/22/48	47.02	858.47
02/23/48	46.96	858.53
02/24/48	46.98	858.51
02/25/48	46.98	858.51
02/26/48	46.93	858.56
02/27/48	46.88	858.61
02/28/48	46.81	858.68
06/05/48	57.20	848.29
06/08/48	49.76	855.73
06/25/48	56.80	848.69
06/26/48	55.80	849.69
06/27/48	55.80	849.69
06/28/48	56.42	849.07
06/29/48	55.86	849.63
06/30/48	55.92	849.57
07/01/48	54.96	850.53
07/02/48	54.30	851.19
07/09/48	54.87	850.62
07/10/48	54.86	850.63
07/11/48	54.87	850.62
07/12/48	54.87	850.62
07/13/48	54.88	850.61
07/14/48	54.89	850.60
07/15/48	54.88	850.61
07/16/48	54.88	850.61
09/02/48	78.35	827.14
09/04/48	80.20	825.29
09/11/48	84.58	820.91
09/25/48	89.08	816.41
10/02/48	89.50	815.99
10/08/48	91.50	813.99
10/16/48	83.10	822.39
10/18/48	89.08	816.41
10/23/48	82.40	823.09
10/25/48	87.30	818.19
10/30/48	74.10	831.39
10/31/48	73.33	832.16
11/01/48	72.08	833.41
11/02/48	71.90	833.59
11/03/48	70.20	835.29
11/04/48	69.50	835.99
11/06/48	67.30	838.19
11/13/48	64.80	840.69
11/19/48	55.10	850.39
12/04/48	59.41	846.08
12/05/48	59.25	846.24
12/06/48	59.09	846.40
12/07/48	59.07	846.42
12/08/48	59.06	846.43
12/09/48	59.04	846.45
12/19/48	57.90	847.59
12/20/48	57.35	848.14
12/21/48	57.00	848.49
12/22/48	58.50	846.99
12/23/48	58.13	847.36
12/24/48	57.20	848.29
12/25/48	57.50	847.99
01/01/49	58.80	846.89
01/02/49	58.50	846.99
01/03/49	59.01	846.48
01/04/49	58.40	847.09
01/05/49	57.90	847.59
01/06/49	59.24	846.25
01/07/49	58.42	847.07
01/08/49	56.95	848.54
01/09/49	56.80	848.69
01/10/49	57.21	848.28
01/11/49	56.77	848.72
01/12/49	57.25	848.24
01/13/49	56.65	848.84
01/14/49	56.37	849.12
01/15/49	56.13	849.36
01/22/49	55.60	849.89
01/23/49	55.50	849.99
01/24/49	56.18	849.31
01/25/49	55.60	849.89
01/29/49	55.60	849.89
01/30/49	55.41	850.08
01/31/49	55.97	849.52
02/01/49	55.42	850.07
02/02/49	55.82	849.67
02/03/49	55.36	850.13
02/04/49	55.76	849.73
02/05/49	55.77	849.72
02/06/49	55.01	850.48
02/07/49	55.67	849.82
02/08/49	55.17	850.32
02/09/49	55.62	849.87
02/10/49	55.23	850.26
02/12/49	54.85	850.64
02/13/49	54.81	850.68
02/14/49	55.48	850.01
02/15/49	54.88	850.61
02/16/49	55.03	850.46
02/17/49	54.75	850.74
02/18/49	55.03	850.46
02/19/49	54.75	850.74
02/20/49	54.60	850.89
02/21/49	55.32	850.17
02/22/49	54.77	850.72
02/23/49	54.48	851.01
02/24/49	55.46	850.03
02/25/49	54.80	850.69
02/26/49	54.58	850.91
02/27/49	54.30	851.19
02/28/49	55.00	850.49
03/01/49	54.46	851.03
03/02/49	55.45	850.04
03/03/49	54.75	850.74
03/04/49	54.95	850.54
03/05/49	54.84	850.65
03/06/49	54.52	850.97
03/07/49	55.30	850.19
03/08/49	54.70	850.79
03/09/49	54.50	850.99
03/10/49	55.73	849.76
03/11/49	54.92	850.57
03/12/49	54.50	850.99
03/13/49	54.35	851.14
03/14/49	55.55	849.94
03/15/49	54.80	850.69
03/16/49	55.37	850.12
03/17/49	54.82	850.67
03/18/49	54.49	851.00
03/19/49	55.00	850.49
03/20/49	53.95	851.54
03/21/49	53.45	852.04
03/22/49	54.73	850.76
03/23/49	53.90	851.59
03/24/49	54.72	850.77
03/25/49	53.85	851.64
03/26/49	56.77	848.72
03/27/49	55.20	850.29
03/28/49	54.34	851.15
03/29/49	54.05	851.44
03/30/49	55.25	850.24
03/31/49	53.95	851.54
04/01/49	53.75	851.74
04/02/49	55.88	849.61
04/03/49	53.97	851.52
04/04/49	53.80	851.69
04/05/49	56.41	849.08
04/06/49	55.45	850.04
04/07/49	54.34	851.15
04/08/49	54.05	851.44
04/09/49	55.35	850.14
04/10/49	54.10	851.39
04/11/49	56.12	849.37
04/12/49	54.80	850.69
04/13/49	54.00	851.49
04/14/49	53.64	851.85
04/17/49	54.21	851.28
04/18/49	54.12	851.37
04/19/49	54.23	851.26
04/20/49	54.13	851.36
04/21/49	54.93	850.56
04/22/49	54.25	851.24
04/23/49	55.50	849.99
04/24/49	54.80	850.69
04/25/49	57.25	848.24
04/26/49	56.05	849.44
04/27/49	55.05	850.44
04/28/49	56.53	848.96
04/29/49	55.80	849.69
04/30/49	54.20	851.29
05/01/49	54.05	851.44
05/02/49	55.65	849.84
05/03/49	54.55	850.94
05/04/49	54.05	851.44
05/05/49	53.54	851.95
05/06/49	54.25	851.24
05/07/49	56.62	848.87
05/08/49	55.27	850.22
05/09/49	54.50	850.99
05/10/49	56.40	849.09
05/11/49	55.74	849.75
05/12/49	54.50	850.99
05/13/49	55.94	849.55
05/14/49	55.84	849.65
05/15/49	55.54	849.95
05/16/49	54.97	850.52
05/17/49	54.54	850.95
05/18/49	54.54	850.95
05/19/49	54.31	851.18
05/20/49	54.81	850.68
05/21/49	53.43	852.06
05/22/49	53.45	852.04
05/23/49	54.22	851.27
05/24/49	53.93	851.56
05/25/49	53.44	852.05
05/26/49	54.05	851.44
05/27/49	53.93	851.56
05/28/49	53.44	852.05
05/29/49	52.43	853.06
05/30/49	52.43	853.06
05/31/49	51.65	853.84
06/01/49	54.78	850.71
06/02/49	54.15	851.34
06/03/49	54.25	851.24
06/04/49	53.98	851.51
06/05/49	53.98	851.51
06/06/49	53.59	851.90
06/07/49	53.60	851.89
06/08/49	53.45	852.04
06/09/49	53.18	852.31
06/10/49	54.08	851.41
06/11/49	54.08	851.41
06/12/49	53.21	852.28
06/13/49	52.83	852.66
06/14/49	52.71	852.78
06/15/49	52.95	852.54
06/16/49	52.95	852.54
06/17/49	52.86	852.63
06/18/49	52.86	852.63
06/19/49	52.72	852.77
06/20/49	52.61	852.88
06/21/49	52.71	852.78
06/22/49	52.85	852.64
06/23/49	52.46	853.03
06/24/49	52.46	853.03
06/25/49	51.94	853.55
06/26/49	51.94	853.55
06/27/49	51.92	853.57
06/28/49	51.83	853.66
06/29/49	52.06	853.43
06/30/49	51.47	854.02
07/01/49	51.56	853.93
07/08/49	55.22	850.27
07/09/49	54.45	851.04
07/10/49	54.68	850.81
07/11/49	54.92	850.57
07/12/49	54.92	850.57
07/13/49	55.66	849.83
07/14/49	56.16	849.33
07/15/49	55.92	849.57
07/16/49	55.41	850.08
07/17/49	55.41	850.08
07/18/49	55.41	850.08
07/19/49	56.12	849.37
07/20/49	56.14	849.35
07/21/49	56.16	849.33
07/22/49	55.90	849.59
07/29/49	56.71	848.78
07/30/49	56.62	848.87
07/31/49	56.21	849.28
08/01/49	55.44	850.05
08/02/49	55.44	850.05
08/03/49	56.11	849.38
08/04/49	56.21	849.28
08/05/49	54.77	850.72
08/12/49	68.30	837.19
08/13/49	76.65	828.84
08/14/49	76.64	828.85
08/15/49	76.68	828.81
08/19/49	78.22	827.27
08/20/49	80.93	824.56
08/21/49	89.84	815.65
08/22/49	90.42	815.07
08/23/49	91.00	814.49
08/24/49	91.02	814.47
08/25/49	81.46	824.03
08/26/49	91.43	814.06
08/27/49	91.90	813.59
08/28/49	90.92	814.57
08/29/49	91.04	814.45
08/30/49	91.12	814.37
08/31/49	91.13	814.36
09/01/49	91.16	814.33
09/02/49	91.20	814.29
09/03/49	91.23	814.26
09/09/49	90.26	815.23
09/10/49	90.36	815.13
09/11/49	90.34	815.15
09/12/49	91.95	813.54
09/13/49	85.80	819.69
09/16/49	89.05	816.44
09/17/49	93.34	812.15
09/18/49	94.22	811.27
09/19/49	94.22	811.27
09/20/49	94.35	811.14
09/23/49	83.02	822.47
09/24/49	85.88	819.61
09/25/49	86.70	818.79
09/26/49	84.40	821.09
09/27/49	82.67	822.82
09/28/49	82.67	822.82
09/29/49	82.66	822.83
09/30/49	82.67	822.82
10/01/49	87.40	818.09
10/02/49	87.39	818.10
10/03/49	87.38	818.11
10/04/49	87.37	818.12
10/05/49	87.37	818.12
10/06/49	87.36	818.13
10/07/49	87.30	818.19
10/08/49	85.05	820.44
10/09/49	81.35	824.14
10/10/49	78.75	826.74
10/11/49	77.05	828.44
10/12/49	75.75	829.74
10/13/49	75.05	830.44
10/14/49	73.09	832.40
10/15/49	72.26	833.23
10/16/49	72.10	833.39
10/17/49	71.40	834.09
10/18/49	70.70	834.79
10/19/49	69.70	835.79

139-049-01CCD2 **(Continued)** MP Elev (msl,ft)=905.49

Fargo Aquifer SI (ft.)=0-196

Date	Depth to Water (ft)	WL Elev (msl, ft)
10/20/49	68.57	836.92
10/21/49	68.75	836.74
10/22/49	66.92	838.57
10/23/49	66.70	838.79
10/24/49	67.35	838.14
10/25/49	65.90	839.59
10/26/49	65.38	840.11
10/27/49	66.26	839.23
10/28/49	65.80	839.69
10/29/49	64.61	840.88
10/30/49	65.10	840.39
10/31/49	64.71	840.78
11/01/49	63.53	841.96
11/11/49	61.86	843.63
11/19/49	61.96	843.53
11/20/49	61.21	844.28
11/21/49	60.86	844.63
11/22/49	61.57	843.92
11/23/49	60.54	844.95
11/24/49	61.14	844.35
11/25/49	60.54	844.95
11/26/49	57.22	848.27
12/03/49	61.44	844.05
12/04/49	62.26	843.23
12/05/49	61.17	844.32
12/06/49	62.00	843.49
12/07/49	61.92	843.57
12/10/49	58.60	846.89
12/17/49	58.80	846.69
12/18/49	58.18	847.31
12/19/49	59.22	846.27
12/20/49	58.20	847.29
12/24/49	57.62	847.87
01/25/50	57.10	848.39
07/07/50	58.40	847.09
07/14/50	68.40	837.09
07/21/50	78.15	827.34
07/30/50	75.40	830.09
08/04/50	84.71	820.78
08/11/50	82.54	822.95
08/14/50	83.10	822.39
08/25/50	83.10	822.39
09/02/50	83.15	822.34
09/23/50	62.74	842.75
09/30/50	62.67	842.82
10/07/50	60.60	844.89
10/14/50	63.40	842.09
10/28/50	58.36	847.13
01/06/51	52.92	852.57
01/13/51	52.60	852.89
01/19/51	53.30	852.19
01/27/51	51.90	853.59
02/02/51	52.60	852.89
02/09/51	52.55	852.94
02/16/51	51.60	853.89
02/23/51	51.60	853.89
03/04/51	51.46	854.03
03/09/51	52.00	853.49
03/17/51	51.56	853.93
03/24/51	51.20	854.29
03/31/51	51.40	854.09
04/06/51	51.50	853.99
04/13/51	52.30	853.19
04/21/51	52.32	853.17
04/27/51	52.32	853.17
05/04/51	54.10	851.39
05/11/51	54.75	850.74
05/18/51	54.70	850.79
05/26/51	54.72	850.77
06/01/51	54.75	850.74
06/08/51	55.00	850.49
06/16/51	54.95	850.54
06/22/51	56.37	849.12
06/29/51	56.50	848.99
07/06/51	55.97	849.52
07/13/51	54.98	850.51
07/20/51	54.99	850.50
07/27/51	54.99	850.50
08/03/51	72.72	832.77
08/10/51	67.97	837.52
08/17/51	74.38	831.11
08/24/51	74.52	830.97
08/31/51	74.53	830.96
09/08/51	74.25	831.24
09/14/51	76.24	829.25
09/21/51	75.82	829.67
09/28/51	65.39	840.10
10/05/51	60.92	844.57
10/12/51	63.22	842.27
10/19/51	69.50	835.99
10/26/51	55.69	849.80
11/02/51	65.85	839.64
11/09/51	56.79	848.70
11/16/51	54.45	851.04
11/23/51	53.95	851.54
11/30/51	54.80	850.69
12/07/51	55.01	850.48
12/14/51	54.91	850.58
12/22/51	51.07	854.42
12/28/51	52.98	852.51
01/04/52	52.66	852.83
01/11/52	53.45	852.04
01/18/52	53.50	851.99
01/25/52	52.89	852.60
02/02/52	51.98	853.51
02/08/52	52.33	853.16
02/16/52	51.82	853.67
02/23/52	51.60	853.89
02/29/52	52.15	853.34
03/07/52	51.69	853.80
03/14/52	51.70	853.79
03/22/52	51.74	853.75
03/29/52	52.33	853.16
04/05/52	51.31	854.18
04/12/52	51.18	854.31
04/22/52	51.69	853.80
04/26/52	51.46	854.03
05/03/52	52.89	852.60
05/09/52	53.90	851.59
05/16/52	65.15	840.34
05/23/52	56.11	849.38
05/31/52	53.66	851.83
06/06/52	56.78	848.71
06/14/52	54.76	850.73
06/21/52	54.34	851.15
06/28/52	53.38	852.11
07/05/52	51.94	853.55
07/11/52	53.16	852.33
07/18/52	53.63	851.86
07/25/52	53.08	852.41
08/02/52	54.09	851.40
08/09/52	52.76	852.73
08/15/52	54.20	851.29
08/23/52	53.69	851.80
08/30/52	60.84	844.65
09/06/52	56.54	848.95
09/12/52	55.21	850.28
09/20/52	54.30	851.19
09/26/52	53.80	851.69
10/10/52	59.05	846.44
10/17/52	56.23	849.26
10/24/52	54.31	851.18
10/31/52	52.98	852.51
11/08/52	52.66	852.83
11/14/52	52.89	852.60
11/22/52	52.28	853.21
11/29/52	51.85	853.64
12/06/52	51.65	853.84
12/13/52	51.44	854.05
12/21/52	51.40	854.09
12/27/52	51.06	854.43
01/03/53	50.87	854.62
01/10/53	50.80	854.69
01/19/53	50.50	854.99
01/24/53	50.61	854.88
01/31/53	50.58	854.91
02/07/53	50.84	854.65
02/14/53	50.48	855.01
02/21/53	50.54	854.95
02/28/53	50.56	854.93
03/07/53	49.53	855.96
03/14/53	50.21	855.28
03/21/53	50.65	854.84
03/28/53	50.56	854.93
04/04/53	50.77	854.72
04/11/53	51.10	854.39
04/18/53	50.54	854.95
04/25/53	50.55	854.94
05/02/53	50.08	855.41
05/09/53	50.23	855.26
05/16/53	50.38	855.11
05/23/53	51.18	854.31
05/30/53	52.12	853.37
06/07/53	53.21	852.28
06/13/53	51.92	853.57
06/20/53	51.78	853.71
06/28/53	52.75	852.74
07/05/53	52.26	853.23
07/12/53	52.02	853.47
07/20/53	52.59	852.90
07/26/53	53.25	852.24
08/03/53	54.52	850.97
08/09/53	54.12	851.37
08/16/53	54.00	851.49
08/23/53	54.19	851.30
08/30/53	54.03	851.46
09/06/53	53.20	852.29
09/12/53	57.21	848.28
09/19/53	58.02	847.47
02/01/54	51.84	853.65
02/07/54	51.68	853.81
02/15/54	51.45	854.04
02/21/54	51.26	854.23
03/01/54	51.01	854.48
03/14/54	50.70	854.79
03/21/54	50.41	855.08
04/01/54	50.27	855.22
04/04/54	50.02	855.47
04/11/54	49.91	855.58
04/18/54	49.80	855.69
04/25/54	49.62	855.87
05/01/54	49.62	855.87
05/09/54	49.80	855.69
05/17/54	49.55	855.94
05/24/54	49.50	855.99
05/31/54	49.57	855.92
06/06/54	49.72	855.77
06/14/54	51.83	853.66
06/21/54	51.59	853.90
06/28/54	50.79	854.70
07/06/54	58.46	847.03
07/12/54	54.25	851.24
07/19/54	51.58	853.91
07/26/54	49.60	855.89
08/01/54	59.24	846.25
08/08/54	54.13	851.36
08/15/54	60.44	845.05
08/22/54	54.75	850.74
08/30/54	51.08	854.41
09/05/54	53.39	852.10
09/12/54	86.44	819.05
09/20/54	67.19	838.30
09/26/54	59.10	846.39
10/03/54	54.15	851.34
10/10/54	51.34	854.15
10/17/54	49.68	855.81
10/24/54	48.64	856.85
10/31/54	47.92	857.57
11/08/54	47.23	858.26
11/14/54	46.83	858.66
11/21/54	46.40	859.09
11/28/54	46.39	859.10
12/05/54	46.51	858.98
12/12/54	46.79	858.70
12/20/54	46.89	858.60
12/26/54	46.91	858.58
01/02/55	47.58	857.91
01/09/55	47.74	857.75
01/16/55	47.97	857.52
01/23/55	48.23	857.26
01/30/55	48.49	857.00
02/06/55	48.67	856.82
02/13/55	48.73	856.76
02/21/55	48.87	856.62
02/27/55	48.96	856.53
03/06/55	49.13	856.36
03/13/55	49.27	856.22
03/21/55	49.29	856.20
03/27/55	49.30	856.19
04/03/55	49.33	856.16
04/10/55	49.19	856.30
04/17/55	48.95	856.54
04/24/55	48.83	856.66
05/01/55	48.75	856.74
05/08/55	48.46	857.03
05/16/55	47.72	857.77
05/21/55	47.08	858.41
05/29/55	46.93	858.56
06/05/55	50.95	854.54
06/13/55	49.60	855.89
06/21/55	48.90	856.59
06/26/55	48.04	857.45
07/02/55	47.55	857.94
07/10/55	85.07	820.42
07/16/55	89.07	816.42
07/25/55	66.94	838.55
08/01/55	57.77	847.72
08/08/55	52.04	853.45
08/15/55	48.43	857.06
08/22/55	46.85	858.64
08/28/55	45.09	860.40
09/05/55	43.86	861.63
09/11/55	43.33	862.16
09/19/55	42.83	862.66
09/26/55	42.73	862.76
10/03/55	42.42	863.07
10/09/55	43.33	862.16
10/17/55	43.56	861.93
10/22/55	43.78	861.71
10/28/55	43.79	861.70
11/05/55	43.53	861.96
11/15/55	43.69	861.80
11/22/55	43.96	861.53
11/28/55	44.23	861.26
12/05/55	44.64	860.85
12/13/55	45.01	860.48
12/18/55	45.21	860.28
12/28/55	45.69	859.80
01/03/56	45.54	859.95
01/10/56	45.68	859.81
01/16/56	45.78	859.71
01/24/56	45.88	859.61
01/31/56	46.02	859.47
02/04/56	46.01	859.48
02/14/56	46.04	859.45
02/21/56	46.20	859.29
02/28/56	46.12	859.37
03/06/56	46.20	859.29
03/13/56	46.10	859.39
03/21/56	44.28	861.21
03/27/56	44.23	861.26
04/02/56	44.28	861.21
04/10/56	44.51	860.98
04/17/56	44.68	860.81
04/24/56	43.70	861.79
05/01/56	44.75	860.74
05/08/56	44.78	860.71
05/15/56	44.80	860.69
05/21/56	44.81	860.68
05/29/56	43.90	861.59
06/05/56	45.13	860.36
06/12/56	43.86	861.63

139-049-01CDB — MP Elev (msl,ft)=904

Fargo Aquifer — SI (ft.)=0-192

Date	Depth to Water (ft)	WL Elev (msl, ft)
2/1/56	32.00	872.00

139-049-02AA3 — MP Elev (msl,ft)=901.5

Undefined Aquifer — SI (ft.)=0-22

Date	Depth to Water (ft)	WL Elev (msl, ft)
07/31/40	17.56	883.94
08/04/40	17.19	884.31
08/10/40	16.84	884.66
08/17/40	16.90	884.60
08/24/40	17.10	884.40
08/31/40	17.08	884.42
09/07/40	17.19	884.31
09/14/40	17.30	884.20
09/21/40	17.40	884.10
09/28/40	17.47	884.03
10/05/40	17.50	884.00
10/12/40	17.54	883.96
10/19/40	17.52	883.98
10/26/40	17.52	883.98
11/02/40	17.41	884.09
11/09/40	17.36	884.14
11/16/40	17.20	884.30
11/23/40	17.25	884.25
11/30/40	17.25	884.25
12/07/40	17.27	884.23
12/14/40	17.40	884.10
12/21/40	17.35	884.15
12/28/40	17.33	884.17
01/04/41	17.37	884.13
01/11/41	17.40	884.10
01/18/41	17.48	884.02
01/26/41	17.52	883.98
02/01/41	17.56	883.94
02/08/41	17.60	883.90
02/16/41	17.64	883.86
02/22/41	17.72	883.78
03/01/41	17.70	883.80
03/09/41	17.78	883.72
03/15/41	17.73	883.77
03/23/41	17.60	883.90
03/29/41	17.40	884.10
04/05/41	17.33	884.17
04/12/41	16.86	884.64
04/19/41	16.32	885.18
04/26/41	15.89	885.61
05/03/41	15.49	886.01
05/10/41	15.59	885.91
05/17/41	15.46	886.04
05/24/41	15.59	885.91
05/31/41	15.45	886.05
06/07/41	14.98	886.52
06/14/41	13.04	888.46
06/21/41	12.15	889.35
06/28/41	11.74	889.76
07/06/41	11.73	889.77
07/12/41	11.80	889.70
07/19/41	12.14	889.36
08/02/41	12.43	889.07
08/09/41	12.65	888.85
08/16/41	12.62	888.88
08/23/41	12.69	888.81
08/30/41	12.64	888.86
09/06/41	12.89	888.61
09/13/41	12.89	888.61
09/20/41	12.90	888.60
09/28/41	12.89	888.61
10/04/41	12.67	888.83
10/11/41	12.53	888.97
10/18/41	12.54	888.96
10/25/41	12.55	888.95
11/01/41	12.50	889.00
11/08/41	12.70	888.80
11/15/41	12.74	888.76
11/22/41	12.86	888.64
11/29/41	12.85	888.65
12/06/41	13.02	888.48
12/13/41	13.08	888.42
12/20/41	13.12	888.38
12/27/41	13.33	888.17
01/04/42	13.39	888.11
01/10/42	13.29	888.21
01/17/42	13.21	888.29
01/24/42	13.25	888.25
01/31/42	13.46	888.04
02/07/42	13.54	887.96
02/14/42	13.67	887.83
02/21/42	13.73	887.77
02/28/42	13.84	887.66
03/07/42	13.81	887.69
03/14/42	13.93	887.57
03/21/42	13.96	887.54
03/28/42	13.94	887.56
04/04/42	13.98	887.52
04/11/42	14.01	887.49
04/18/42	13.99	887.51
04/25/42	13.74	887.76
05/02/42	12.51	888.99
05/09/42	11.47	890.03
05/16/42	11.09	890.41
05/23/42	10.89	890.61
05/30/42	10.84	890.66
06/07/42	10.31	891.19
06/14/42	10.17	891.33
06/21/42	10.19	891.31
06/27/42	10.21	891.29
07/04/42	10.19	891.31
07/12/42	10.49	891.01
07/19/42	10.71	890.79
07/26/42	10.93	890.57
08/01/42	10.86	890.64
08/08/42	11.24	890.26
08/15/42	10.32	891.18
08/23/42	11.59	889.91
08/30/42	10.18	891.32
09/06/42	10.35	891.15
09/13/42	10.34	891.16
09/20/42	9.98	891.52
09/27/42	9.98	891.52
10/04/42	9.89	891.61
10/11/42	10.01	891.49
10/17/42	9.90	891.60
10/24/42	9.10	892.40
11/12/42	10.42	891.08
11/21/42	10.75	890.75
11/28/42	10.72	890.78
12/05/42	10.76	890.74
12/12/42	10.87	890.63
12/19/42	11.03	890.47
12/26/42	10.86	890.64
01/02/43	10.93	890.57
01/09/43	10.82	890.68
01/16/43	10.86	890.64
01/23/43	10.68	890.82
01/30/43	11.08	890.42
02/06/43	11.03	890.47
02/13/43	11.30	890.20
02/20/43	11.18	890.32
02/27/43	11.15	890.35
03/06/43	11.34	890.16
03/13/43	11.34	890.16
03/20/43	11.26	890.24
03/27/43	11.34	890.16
04/02/43	11.45	890.05
04/10/43	11.20	890.30
04/17/43	11.03	890.47
04/24/43	10.70	890.80
05/01/43	10.70	890.80
05/08/43	10.55	890.95
05/15/43	10.39	891.11
05/22/43	10.17	891.33
05/29/43	9.17	892.33
06/05/43	8.02	893.48
06/12/43	7.43	894.07
06/21/43	5.11	896.39

139-049-02AAC — MP Elev (msl,ft)=902.7

Fargo Aquifer — SI (ft.)=0-0

Date	Depth to Water (ft)	WL Elev (msl, ft)
07/08/40	30.99	871.71
07/09/40	34.77	867.93
07/11/40	30.87	871.83
07/12/40	34.49	868.21
07/15/40	42.45	860.25
07/16/40	46.37	856.33
07/17/40	39.19	863.51
07/18/40	48.37	854.33
07/20/40	48.91	853.79
09/28/40	47.38	855.32
10/05/40	44.40	858.30
10/12/40	43.35	859.35
10/19/40	43.65	859.05
10/26/40	41.97	860.73
11/02/40	39.45	863.25
11/09/40	38.68	864.02
11/16/40	37.46	865.24
11/23/40	37.92	864.78
11/30/40	39.85	862.85
12/07/40	37.89	864.81
12/14/40	38.60	864.10
12/21/40	37.86	864.84
12/28/40	34.54	868.16
01/04/41	30.58	872.12
01/11/41	36.29	866.41
01/18/41	34.41	868.29
01/26/41	38.10	864.60
02/01/41	35.30	867.40
02/08/41	33.41	869.29
02/16/41	35.82	866.88
02/22/41	33.34	869.36
03/01/41	33.82	868.88
03/09/41	33.54	869.16
03/15/41	34.61	868.09
03/23/41	33.71	868.99
03/29/41	34.85	867.85
04/05/41	33.36	869.34
04/12/41	32.90	869.80
04/19/41	33.12	869.58
04/26/41	32.87	869.83
05/03/41	33.98	868.72
05/10/41	34.94	867.76
05/17/41	32.73	869.97
05/24/41	32.88	869.82
05/31/41	34.02	868.68

139-049-02ADC — MP Elev (msl,ft)=904

Fargo Aquifer — SI (ft.)=0-0

Date	Depth to Water (ft)	WL Elev (msl, ft)
10/08/40	40.62	863.38
10/12/40	40.12	863.88
10/19/40	39.27	864.73
10/26/40	38.59	865.41
11/02/40	37.97	866.03
11/09/40	37.53	866.47
11/16/40	37.07	866.93
11/23/40	36.76	867.24
11/30/40	36.33	867.67
12/07/40	35.96	868.04
12/14/40	35.71	868.29
12/21/40	35.48	868.52
12/28/40	35.03	868.97
01/04/41	34.84	869.16
01/11/41	34.63	869.37
01/18/41	34.46	869.54
01/26/41	34.21	869.79
02/01/41	34.10	869.90
02/08/41	33.93	870.07
02/16/41	33.76	870.24
02/22/41	33.72	870.28
03/01/41	33.53	870.47
03/09/41	33.42	870.58

139-049-02CCD3
Undefined Aquifer

MP Elev (msl,ft)=901.55
SI (ft.)=346-356

Date	Depth to Water (ft)	WL Elev (msl, ft)
10/01/63	74.95	826.60
08/27/82	92.59	808.96
11/17/82	92.89	808.66
04/19/83	91.22	810.33
05/24/83	91.48	810.07
06/22/83	93.09	808.46
08/18/83	97.47	804.08
09/14/83	103.22	798.33
10/12/83	95.20	806.35
11/08/83	95.77	805.78
04/12/84	97.12	804.43
06/22/84	98.71	802.84
07/12/84	98.92	802.63
08/09/84	101.68	799.87
09/12/84	102.74	798.81
10/09/84	101.18	800.37
10/31/84	101.20	800.35
12/05/84	103.71	797.84
04/09/85	100.77	800.78
05/03/85	100.05	801.50
06/08/85	103.42	798.13
07/08/85	103.02	798.53
08/14/85	102.32	799.23
09/21/85	102.08	799.47
10/25/85	101.54	800.01
12/06/85	103.36	798.19
05/10/86	101.17	800.38
06/07/86	101.60	799.95
07/03/86	101.73	799.82
07/15/86	108.23	793.32
08/02/86	104.30	797.25
08/29/86	102.90	798.65
10/11/86	106.28	795.27
11/01/86	102.55	799.00
12/06/86	110.92	790.63
12/10/86	108.50	793.05
04/25/87	101.45	800.10
05/30/87	102.36	799.19
06/27/87	104.48	797.07
07/16/87	104.32	797.23
07/31/87	104.63	796.92
08/29/87	105.10	796.45
09/26/87	105.15	796.40
10/31/87	104.75	796.80
11/28/87	104.32	797.23
12/19/87	104.12	797.43
04/01/88	103.54	798.01
04/30/88	103.62	797.93
05/28/88	104.20	797.35
06/25/88	105.24	796.31
07/12/88	105.60	795.95
07/22/88	106.10	795.45
08/20/88	106.63	794.92
09/17/88	107.15	794.40
10/14/88	106.80	794.75
11/05/88	106.31	795.24
12/10/88	105.80	795.75
04/21/89	105.05	796.50
05/12/89	105.17	796.38
06/03/89	105.30	796.25
07/01/89	105.80	795.75
08/01/89	107.90	793.65
09/30/89	106.98	794.57
10/28/89	106.62	794.93
11/18/89	105.83	795.72
01/04/90	104.24	797.31
05/05/90	103.98	797.57
05/25/90	104.50	797.05
09/28/90	107.41	794.14
10/26/90	106.85	794.70
11/17/90	106.37	795.18

139-049-02CCD4
Nodak Aquifer

MP Elev (msl,ft)=901.19
SI (ft.)=237-242

Date	Depth to Water (ft)	WL Elev (msl, ft)
11/07/90	106.52	794.67
11/15/90	106.29	794.90
11/17/90	106.16	795.03
12/09/90	105.53	795.66
03/30/91	104.75	796.44
05/11/91	104.72	796.47
06/02/91	105.01	796.18
07/13/91	105.46	795.73
08/10/91	105.74	795.45
08/31/91	106.45	794.74
09/28/91	106.44	794.75
10/19/91	106.63	794.56
11/17/91	106.75	794.44
12/2[illegible]/91	106.60	794.59
04/17/92	106.40	794.79
05/20/92	106.75	794.44
06/13/92	106.99	794.20
07/26/92	107.05	794.14
08/[illegible]/92	107.24	793.95
09/24/92	107.06	794.13
10/[illegible]/92	107.21	793.98
11/[illegible]/92	106.93	794.26
12/05/92	107.54	793.65
05/[illegible]/93	105.33	795.86
06/04/93	105.69	795.50
08/06/93	106.93	794.26
08/28/93	107.32	793.87
09/25/93	107.72	793.47
10/17/93	107.88	793.31
11/11/93	107.84	793.35
04/16/94	107.15	794.04
05/15/94	107.21	793.98
06/11/94	107.69	793.50
07/24/94	108.14	793.05
08/20/94	108.40	792.79
09/24/94	108.52	792.67
10/28/94	108.45	792.74
11/26/94	108.79	792.40
04/29/95	107.60	793.59
05/28/95	107.62	793.57
07/01/95	108.64	792.55
08/05/95	108.60	792.59
09/09/95	109.13	792.06
10/27/95	108.01	793.18
11/23/95	107.65	793.54
06/04/96	105.52	795.67
06/30/96	106.32	794.87
07/29/96	107.83	793.36
08/24/96	108.52	792.67
10/05/96	109.08	792.11

139-049-02DBB MP Elev (msl,ft)=899.3

Fargo Aquifer Sl (ft.)=0-155

Date	Depth to Water (ft)	WL Elev (msl, ft)
10/30/40	24.39	874.91
11/02/40	24.06	875.24
11/09/40	21.67	877.63
11/16/40	19.40	879.90
11/23/40	19.19	880.11
11/30/40	18.36	880.94
12/07/40	19.04	880.26
12/14/40	19.16	880.14
12/21/40	19.17	880.13
12/28/40	19.17	880.13
01/04/41	19.06	880.24
01/11/41	19.13	880.17
01/18/41	19.17	880.13
01/26/41	19.10	880.20
02/01/41	19.13	880.17
02/08/41	19.06	880.24
02/16/41	19.10	880.20
02/22/41	19.19	880.11
03/01/41	19.16	880.14
03/09/41	19.20	880.10
03/15/41	19.22	880.08
03/23/41	19.10	880.20
03/29/41	19.07	880.23
04/05/41	19.26	880.04
04/12/41	19.01	880.29
04/19/41	19.03	880.27
04/26/41	19.03	880.27
05/03/41	18.82	880.48
05/10/41	18.84	880.46
05/17/41	18.82	880.48
05/24/41	18.83	880.47
05/31/41	18.67	880.63
06/02/41	18.59	880.71
06/04/41	20.02	879.28
06/07/41	21.70	877.60
06/13/41	25.03	874.27
06/14/41	26.24	873.06
06/18/41	31.10	868.20
06/19/41	33.62	865.68
06/20/41	41.83	857.47
06/21/41	45.17	854.13
06/23/41	46.65	852.65
06/24/41	47.47	851.83
06/27/41	49.14	850.16
06/28/41	49.62	849.68
06/30/41	50.42	848.88
07/02/41	51.14	848.16
07/06/41	52.34	846.96
07/09/41	52.12	847.18
07/12/41	53.54	845.76
07/17/41	55.01	844.29
07/19/41	55.48	843.82
07/23/41	56.30	843.00
07/26/41	56.93	842.37
07/28/41	57.42	841.88
08/02/41	58.26	841.04
08/06/41	58.89	840.41
08/07/41	59.04	840.26
08/08/41	59.22	840.08
08/09/41	59.42	839.88
08/16/41	61.33	837.97
08/23/41	62.96	836.34
08/30/41	64.41	834.89
09/06/41	65.32	833.98
09/13/41	66.15	833.15
09/20/41	66.85	832.45
09/28/41	67.11	832.19
09/30/41	67.83	831.47
10/04/41	63.07	836.23
10/11/41	55.59	843.71
10/18/41	50.34	848.96
10/25/41	47.25	852.05
11/01/41	45.08	854.22
11/08/41	43.51	855.79
11/15/41	42.71	856.59
11/22/41	40.44	858.86
11/29/41	38.84	860.46
12/06/41	38.96	860.34
12/13/41	38.09	861.21
12/20/41	36.36	862.94
12/27/41	36.68	862.62
01/04/42	36.08	863.22
01/10/42	35.61	863.69
01/17/42	35.21	864.09
01/24/42	34.84	864.46
01/31/42	34.43	864.87
02/07/42	34.17	865.13
02/14/42	33.82	865.48
02/21/42	33.58	865.72
02/28/42	33.32	865.98
03/07/42	33.24	866.06
03/14/42	32.67	866.63
03/21/42	32.61	866.69
03/28/42	32.27	867.03
04/04/42	32.07	867.23
04/11/42	31.97	867.33
04/18/42	31.83	867.47
04/25/42	31.69	867.61
05/02/42	31.11	868.19
05/16/42	33.10	866.20
05/23/42	30.96	868.34
05/30/42	30.84	868.46
06/07/42	30.63	868.67
06/21/42	30.49	868.81
06/27/42	30.49	868.81
07/04/42	30.49	868.81
07/12/42	30.38	868.92
07/19/42	30.65	868.65
07/26/42	30.64	868.66
08/01/42	37.97	861.33
08/08/42	41.33	857.97
08/15/42	43.18	856.12
08/23/42	45.16	854.14
08/30/42	46.07	853.23
09/06/42	42.31	856.99
09/13/42	40.81	858.49
09/20/42	38.08	861.22
09/27/42	37.05	862.25
10/04/42	36.13	863.17
10/11/42	35.53	863.77
10/17/42	35.45	863.85
10/24/42	34.75	864.55
11/12/42	33.85	865.45
11/21/42	33.78	865.52
11/28/42	34.34	864.96
12/05/42	33.39	865.91
12/12/42	33.28	866.02
12/19/42	33.17	866.13
12/26/42	33.05	866.25
01/02/43	32.95	866.35
01/09/43	32.83	866.47
01/16/43	32.85	866.45
01/23/43	32.76	866.54
01/30/43	32.70	866.60
02/06/43	32.46	866.84
02/13/43	32.27	867.03
02/20/43	32.40	866.90
02/27/43	32.26	867.04
03/06/43	32.33	866.97
03/13/43	32.33	866.97
03/20/43	32.18	867.12
03/27/43	32.12	867.18
04/02/43	32.13	867.17
04/10/43	38.80	860.50
04/17/43	37.49	861.81
04/24/43	35.81	863.49
05/01/43	34.90	864.40
05/08/43	34.33	864.97
05/15/43	33.87	865.43
05/22/43	33.57	865.73
05/29/43	33.17	866.13
06/05/43	32.83	866.47
06/12/43	32.63	866.67
06/21/43	32.53	866.77
06/26/43	32.37	866.93

139-049-03BBB MP Elev (msl,ft)=900.8

West Fargo North Aquifer Sl (ft.)=175-180

Date	Depth to Water (ft)	WL Elev (msl, ft)
09/30/82	118.08	782.72
10/27/82	117.04	783.76
11/17/82	117.64	783.16
03/17/83	117.76	783.04
04/18/83	117.87	782.93
05/19/83	117.55	783.25
05/24/83	117.70	783.10
05/25/83	117.85	782.95
06/02/83	117.41	783.39
06/08/83	117.51	783.29
06/22/83	117.78	783.02
07/11/83	117.69	783.11
07/28/83	117.73	783.07
08/18/83	118.25	782.55
09/14/83	118.67	782.13
10/12/83	118.01	782.79
11/08/83	118.03	782.77
12/14/83	117.74	783.06
04/10/84	117.60	783.20
05/15/84	117.75	783.05
06/20/84	117.60	783.20
07/12/84	117.52	783.28
08/08/84	117.47	783.33
09/12/84	117.57	783.23
10/09/84	118.08	782.72
10/31/84	117.86	782.94
12/05/84	118.08	782.72
04/09/85	117.77	783.03
05/05/85	117.55	783.25
06/08/85	118.05	782.75
07/08/85	117.80	783.00
08/18/85	117.92	782.88
09/21/85	117.81	782.99
10/25/85	117.68	783.12
12/06/85	117.94	782.86
05/11/86	117.80	783.00
06/06/86	117.77	783.03
07/04/86	117.80	783.00
07/15/86	117.79	783.01
08/02/86	118.30	782.50
08/31/86	118.05	782.75
10/10/86	117.90	782.90
11/02/86	118.40	782.40
12/07/86	118.35	782.45
12/10/86	117.98	782.82
04/24/87	118.17	782.63
05/30/87	118.11	782.69
06/27/87	118.26	782.54
07/16/87	117.75	783.05
07/31/87	118.08	782.72
08/30/87	118.54	782.26
09/25/87	118.28	782.52
10/31/87	118.62	782.18
11/29/87	118.38	782.42
12/20/87	118.15	782.65
04/01/88	118.44	782.36
04/30/88	118.10	782.70
05/28/88	118.00	782.80
06/25/88	118.36	782.44
07/12/88	118.14	782.66
07/23/88	118.52	782.28
08/20/88	118.48	782.32
09/01/88	118.68	782.12
09/17/88	118.64	782.16
10/15/88	118.65	782.15
11/06/88	118.78	782.02
12/11/88	119.52	781.28
04/21/89	119.13	781.67
05/13/89	119.32	781.48
06/03/89	119.40	781.40
07/01/89	119.37	781.43
07/30/89	119.66	781.14
09/10/89	120.05	780.75
10/01/89	119.40	781.40
10/29/89	120.12	780.68
11/19/89	118.90	781.90
01/04/90	120.45	780.35
05/04/90	120.70	780.10
05/25/90	120.62	780.18
06/30/90	120.77	780.03
08/04/90	120.98	779.82
09/02/90	121.11	779.69
09/28/90	121.30	779.50
10/09/90	121.29	779.51
10/28/90	121.30	779.50
11/18/90	120.90	779.90
12/09/90	121.07	779.73
03/30/91	121.15	779.65
05/11/91	121.20	779.60
06/01/91	121.02	779.78
07/13/91	121.41	779.39
08/10/91	121.55	779.25
08/31/91	121.68	779.12
09/28/91	121.57	779.23
10/20/91	121.49	779.31
11/16/91	121.73	779.07
12/21/91	121.52	779.28
04/18/92	120.96	779.84
05/20/92	121.05	779.75
06/13/92	121.31	779.49
08/27/92	121.62	779.18
09/26/92	121.56	779.24
10/18/92	122.13	778.67
11/12/92	121.93	778.87
12/05/92	121.76	779.04
05/02/93	121.82	778.98
06/04/93	121.81	778.99

139-049-03BCC2
West Fargo North Aquifer

MP Elev (msl,ft)=900.9
Sl (ft.)=169-174

Date	Depth to Water (ft)	WL Elev (msl, ft)
09/30/82	117.95	782.95
10/27/82	117.45	783.45
11/17/82	117.52	783.38
03/17/83	117.66	783.24
04/18/83	117.53	783.37
05/19/83	117.40	783.50
05/24/83	117.54	783.36
05/25/83	117.70	783.20
06/02/83	117.31	783.59
06/08/83	117.37	783.53
06/22/83	117.64	783.26
07/11/83	117.57	783.33
07/28/83	117.61	783.29
08/18/83	117.83	783.07
09/14/83	118.25	782.65
10/12/83	117.87	783.03
11/08/83	117.88	783.02
12/14/83	117.62	783.28
04/05/84	117.42	783.48
05/15/84	117.63	783.27
06/20/84	117.46	783.44
07/12/84	117.38	783.52
08/09/84	117.42	783.48
09/13/84	117.44	783.46
10/09/84	117.89	783.01
10/31/84	117.74	783.16
12/05/84	117.85	783.05
04/09/85	117.64	783.26
05/05/85	117.38	783.52
06/08/85	117.03	783.87
07/08/85	117.63	783.27
08/18/85	117.82	783.08
09/21/85	117.69	783.21
10/25/85	117.55	783.35
12/06/85	117.77	783.13
05/11/86	117.57	783.33
06/06/86	117.55	783.35
07/04/86	117.51	783.39
07/15/86	117.64	783.26
08/02/86	118.04	782.86
08/31/86	117.77	783.13
10/10/86	117.66	783.24
11/02/86	118.08	782.82
12/07/86	118.08	782.82
12/10/86	117.82	783.08
04/24/87	117.93	782.97
05/30/87	117.85	783.05
06/27/87	118.03	782.87
07/16/87	117.60	783.30
07/31/87	117.80	783.10
08/30/87	118.26	782.64
09/25/87	118.04	782.86
10/31/87	118.34	782.56
11/29/87	118.33	782.57
12/20/87	117.86	783.04
04/01/88	118.20	782.70
04/30/88	117.97	782.93
05/28/88	117.82	783.08
06/25/88	118.27	782.63
07/12/88	118.03	782.87
07/23/88	118.35	782.55
08/20/88	118.31	782.59
09/17/88	118.49	782.41
10/15/88	118.48	782.42
11/06/88	118.63	782.27
12/11/88	117.86	783.04
04/21/89	118.85	782.05
05/13/89	119.10	781.80
06/03/89	119.20	781.70
07/01/89	119.20	781.70
07/30/89	119.47	781.43
09/10/89	119.85	781.05
10/01/89	119.23	781.67
10/29/89	119.91	780.99
11/19/89	118.42	782.48
01/04/90	120.20	780.70

139-049-03BCC3
West Fargo North Aquifer

MP Elev (msl,ft)=901.42
Sl (ft.)=168-173

Date	Depth to Water (ft)	WL Elev (msl, ft)
10/09/90	121.56	779.86
11/07/90	121.65	779.77
11/18/90	121.15	780.27
12/09/90	121.49	779.93
03/30/91	121.35	780.07
05/11/91	121.47	779.95
06/01/91	121.27	780.15
07/13/91	121.64	779.78
08/10/91	121.79	779.63
08/31/91	121.92	779.50
12/21/91	121.82	779.60
04/18/92	121.19	780.23
05/20/92	121.63	779.79
06/13/92	121.56	779.86
07/26/92	121.85	779.57
08/27/92	121.88	779.54
09/26/92	121.84	779.58
11/12/92	122.16	779.26
12/05/92	122.02	779.40
05/01/93	122.18	779.24
06/04/93	122.04	779.38
08/06/93	122.12	779.30
08/29/93	122.05	779.37
10/17/93	121.61	779.81
11/11/93	122.19	779.23
04/17/94	122.41	779.01
05/15/94	122.30	779.12
06/11/94	122.10	779.32
07/24/94	122.37	779.05
08/20/94	122.45	778.97
09/25/94	122.63	778.79
10/29/94	122.37	779.05
11/26/94	122.50	778.92
04/30/95	122.82	778.60
05/28/95	122.65	778.77
07/02/95	122.46	778.96
08/05/95	122.66	778.76
09/09/95	123.17	778.25
10/28/95	122.36	779.06
11/21/95	123.02	778.40
06/04/96	123.35	778.07
06/30/96	123.42	778.00
07/29/96	123.65	777.77
08/25/96	123.77	777.65
10/05/96	123.43	777.99
11/02/96	123.14	778.28

139-049-04AAA1
Undefined Aquifer

MP Elev (msl,ft)=899.19
Sl (ft.)=10-20

Date	Depth to Water (ft)	WL Elev (msl, ft)
08/11/94	8.40	890.79
09/09/94	7.52	891.67
09/20/94	8.08	891.11
10/06/94	8.14	891.05

139-049-04AAA2
Undefined Aquifer

MP Elev (msl,ft)=898.73
Sl (ft.)=10-20

Date	Depth to Water (ft)	WL Elev (msl, ft)
08/11/94	6.24	892.49
09/09/94	5.85	892.88
09/20/94	5.73	893.00
10/06/94	5.53	893.20

139-049-04AAB1
Undefined Aquifer

MP Elev (msl,ft)=897.86
Sl (ft.)=10-20

Date	Depth to Water (ft)	WL Elev (msl, ft)
08/11/94	4.18	893.68
09/09/94	4.24	893.62
09/20/94	4.23	893.63
10/06/94	3.48	894.38

139-049-04AAB2
Undefined Aquifer

MP Elev (msl,ft)=902.15
Sl (ft.)=9-19

Date	Depth to Water (ft)	WL Elev (msl, ft)
08/11/94	5.84	896.31
09/09/94	5.92	896.23
09/20/94	6.07	896.08
10/06/94	5.15	897.00

139-049-04AAD1
Undefined Aquifer

MP Elev (msl,ft)=901.09
SI (ft.)=30-35

Date	Depth to Water (ft)	WL Elev (msl, ft)	Date	Depth to Water (ft)	WL Elev (msl, ft)	Date	Depth to Water (ft)	WL Elev (msl, ft)	Date	Depth to Water (ft)	WL Elev (msl, ft)
08/11/94	5.83	895.26	09/09/94	6.55	894.54	09/20/94	6.05	895.04	10/06/94	5.79	895.30

139-049-04AAD2
Undefined Aquifer

MP Elev (msl,ft)=902.99
SI (ft.)=10-20

Date	Depth to Water (ft)	WL Elev (msl, ft)	Date	Depth to Water (ft)	WL Elev (msl, ft)	Date	Depth to Water (ft)	WL Elev (msl, ft)	Date	Depth to Water (ft)	WL Elev (msl, ft)
08/11/94	4.98	898.01	09/09/94	5.63	897.36	09/20/94	5.09	897.90	10/06/94	4.71	898.28

139-049-04ABB1
Undefined Aquifer

MP Elev (msl,ft)=899.16
SI (ft.)=0-0

Date	Depth to Water (ft)	WL Elev (msl, ft)	Date	Depth to Water (ft)	WL Elev (msl, ft)	Date	Depth to Water (ft)	WL Elev (msl, ft)	Date	Depth to Water (ft)	WL Elev (msl, ft)
08/11/94	3.60	895.56	09/09/94	5.16	894.00	09/20/94	4.24	894.92	10/06/94	3.68	895.48

139-049-04ABB2
Undefined Aquifer

MP Elev (msl,ft)=900.96
SI (ft.)=9-19

Date	Depth to Water (ft)	WL Elev (msl, ft)	Date	Depth to Water (ft)	WL Elev (msl, ft)	Date	Depth to Water (ft)	WL Elev (msl, ft)	Date	Depth to Water (ft)	WL Elev (msl, ft)
08/11/94	2.64	898.32	09/09/94	4.99	895.97	09/20/94	4.55	896.41	10/06/94	4.59	896.37

139-049-04ACCD1
Undefined Aquifer

MP Elev (msl,ft)=903.27
SI (ft.)=8-18

Date	Depth to Water (ft)	WL Elev (msl, ft)	Date	Depth to Water (ft)	WL Elev (msl, ft)	Date	Depth to Water (ft)	WL Elev (msl, ft)	Date	Depth to Water (ft)	WL Elev (msl, ft)
08/11/94	4.58	898.69	09/09/94	5.31	897.96	09/20/94	4.66	898.61	10/06/94	4.16	899.11

139-049-04ACCD2
Undefined Aquifer

MP Elev (msl,ft)=903.42
SI (ft.)=8-18

Date	Depth to Water (ft)	WL Elev (msl, ft)	Date	Depth to Water (ft)	WL Elev (msl, ft)	Date	Depth to Water (ft)	WL Elev (msl, ft)	Date	Depth to Water (ft)	WL Elev (msl, ft)
08/11/94	4.91	898.51	09/09/94	5.42	898.00	09/20/94	4.83	898.59	10/06/94	4.29	899.13

139-049-04ACD1
Undefined Aquifer

MP Elev (msl,ft)=901.28
SI (ft.)=10-20

Date	Depth to Water (ft)	WL Elev (msl, ft)	Date	Depth to Water (ft)	WL Elev (msl, ft)	Date	Depth to Water (ft)	WL Elev (msl, ft)	Date	Depth to Water (ft)	WL Elev (msl, ft)
08/11/94	5.47	895.81	09/09/94	6.22	895.06	09/20/94	5.73	895.55	10/06/94	5.44	895.84

139-049-04ACD2
Undefined Aquifer

MP Elev (msl,ft)=899.79
SI (ft.)=10-20

Date	Depth to Water (ft)	WL Elev (msl, ft)	Date	Depth to Water (ft)	WL Elev (msl, ft)	Date	Depth to Water (ft)	WL Elev (msl, ft)	Date	Depth to Water (ft)	WL Elev (msl, ft)
08/11/94	6.08	893.71	09/09/94	8.02	891.77	09/20/94	7.75	892.04	10/06/94	7.43	892.36

139-049-05BDD MP Elev (msl,ft)=897.2

West Fargo North Aquifer SI (ft.)=218-223

Date	Depth to Water (ft)	WL Elev (msl, ft)	Date	Depth to Water (ft)	WL Elev (msl, ft)	Date	Depth to Water (ft)	WL Elev (msl, ft)	Date	Depth to Water (ft)	WL Elev (msl, ft)
05/13/89	121.50	775.70				10/17/92	122.72	774.48	10/28/94	118.83	778.37
06/03/89	121.82	775.38	03/30/91	123.11	774.09	11/12/92	122.78	774.42	11/26/94	120.45	776.75
07/01/89	121.75	775.45	05/11/91	123.05	774.15	12/05/92	124.06	773.14			
07/30/89	122.15	775.05	06/01/91	122.18	775.02				04/29/95	121.44	775.76
09/10/89	122.60	774.60	07/13/91	123.18	774.02	05/01/93	124.82	772.38	05/28/95	120.75	776.45
10/01/89	122.13	775.07	08/10/91	122.38	774.82	06/04/93	124.84	772.36	07/02/95	120.67	776.53
10/29/89	122.47	774.73	08/31/91	122.40	774.80	08/06/93	123.25	773.95	08/05/95	117.00	780.20
11/19/89	122.72	774.48	09/28/91	122.69	774.51	08/29/93	123.91	773.29	09/09/95	122.00	775.20
			10/20/91	122.76	774.44	09/25/93	124.63	772.57	10/27/95	124.39	772.81
05/04/90	123.35	773.85	11/16/91	123.73	773.47	10/17/93	124.46	772.74	11/21/95	126.05	771.15
05/26/90	123.45	773.75	12/21/91	123.00	774.20	11/11/93	123.29	773.91			
06/30/90	122.92	774.28							06/04/96	117.35	779.85
08/04/90	122.93	774.27	04/18/92	122.14	775.06	04/17/94	121.29	775.91	06/30/96	120.98	776.22
09/02/90	123.60	773.60	05/20/92	122.25	774.95	05/15/94	121.82	775.38	07/29/96	116.70	780.50
09/28/90	123.53	773.67	06/13/92	122.57	774.63	06/11/94	120.42	776.78	08/25/96	119.75	777.45
10/26/90	123.60	773.60	07/26/92	122.65	774.55	07/23/94	119.74	777.46	10/05/96	118.25	778.95
11/18/90	123.31	773.89	08/27/92	122.79	774.41	08/20/94	122.50	774.70	11/02/96	121.90	775.30
12/09/90	123.05	774.15	09/24/92	122.47	774.73	09/25/94	121.15	776.05			

139-049-06AC MP Elev (msl,ft)=890.6

West Fargo North Aquifer SI (ft.)=0-236

Date	Depth to Water (ft)	WL Elev (msl, ft)	Date	Depth to Water (ft)	WL Elev (msl, ft)	Date	Depth to Water (ft)	WL Elev (msl, ft)	Date	Depth to Water (ft)	WL Elev (msl, ft)
12/25/37	9.75	880.85	03/12/38	9.61	880.99	06/11/38	9.81	880.79	09/10/38	14.89	875.71
			03/19/38	9.99	880.61	06/18/38	10.39	880.21	09/17/38	15.52	875.08
01/01/38	9.83	880.77	03/26/38	9.98	880.62	06/25/38	11.64	878.96	09/24/38	15.27	875.33
01/08/38	9.65	880.95	04/02/38	9.70	880.90	07/05/38	11.89	878.71	11/26/38	13.52	877.08
01/15/38	9.70	880.90	04/09/38	9.70	880.90	07/09/38	13.14	877.46	12/03/38	13.93	876.67
01/22/38	9.45	881.15	04/16/38	9.46	881.14	07/18/38	13.16	877.44	12/10/38	13.52	877.08
01/29/38	9.52	881.08	04/30/38	9.18	881.42	07/23/38	13.18	877.42	12/17/38	13.64	876.96
02/05/38	9.20	881.40	05/07/38	9.05	881.55	07/30/38	13.77	876.83	12/29/38	13.22	877.38
02/12/38	9.06	881.54	05/14/38	9.28	881.32	08/10/38	14.10	876.50	12/31/38	12.43	878.17
02/19/38	9.16	881.44	05/21/38	9.02	881.58	08/13/38	13.64	876.96			
02/26/38	9.06	881.54	05/28/38	9.39	881.21	08/20/38	13.89	876.71	01/14/39	13.72	876.88
03/05/38	9.45	881.15	06/04/38	9.39	881.21	08/27/38	14.85	875.75	02/04/39	13.14	877.46

139-049-06ACA MP Elev (msl,ft)=897

West Fargo North Aquifer SI (ft.)=0-240

Date	Depth to Water (ft)	WL Elev (msl, ft)
08/17/37	10.83	886.17
08/25/37	12.42	884.58
08/26/37	12.71	884.29
08/28/37	11.67	885.33
08/30/37	11.92	885.08
09/02/37	12.00	885.00
09/06/37	9.75	887.25
09/10/37	12.58	884.42
09/18/37	12.58	884.42
09/26/37	12.25	884.75
10/11/37	12.83	884.17
10/18/37	12.87	884.13
10/25/37	14.50	882.50
11/09/37	14.92	882.08
11/16/37	14.25	882.75
11/22/37	12.04	884.96
12/21/37	10.78	886.22
12/22/37	10.92	886.08
12/25/37	10.92	886.08
01/01/38	10.71	886.29
01/08/38	10.99	886.01
01/15/38	11.02	885.98
01/22/38	10.79	886.21
01/29/38	10.71	886.29
02/05/38	10.54	886.46
02/12/38	10.42	886.58
02/19/38	10.46	886.54
02/26/38	10.42	886.58
03/05/38	10.60	886.40
03/12/38	10.75	886.25
03/19/38	11.11	885.89
03/26/38	11.07	885.93
04/02/38	11.10	885.90
04/09/38	10.96	886.04
04/16/38	10.50	886.50
04/30/38	10.18	886.82
05/07/38	10.04	886.96
05/14/38	10.26	886.74
05/21/38	10.29	886.71
05/28/38	10.29	886.71
06/04/38	10.58	886.42
06/11/38	11.02	885.98
06/18/38	11.54	885.46
06/25/38	12.46	884.54
07/05/38	15.98	881.02
07/09/38	16.17	880.83
07/18/38	17.54	879.46
07/23/38	17.17	879.83
07/30/38	14.75	882.25
08/10/38	18.33	878.67
08/13/38	14.88	882.12
08/20/38	17.67	879.33
08/27/38	19.08	877.92
09/03/38	18.75	878.25
09/10/38	18.75	878.25
09/17/38	16.25	880.75
09/24/38	19.12	877.88
10/01/38	19.19	877.81
10/08/38	20.00	877.00
11/26/38	14.79	882.21
12/03/38	15.25	881.75
12/10/38	14.88	882.12
12/17/38	14.83	882.17
12/29/38	14.75	882.25
12/31/38	14.50	882.50
01/14/39	14.75	882.25
02/04/39	13.96	883.04
02/18/39	14.54	882.46
03/04/39	15.29	881.71
03/18/39	19.33	877.67
07/17/40	22.18	874.82
07/19/40	31.04	865.96
07/24/40	22.61	874.39
07/27/40	29.29	867.71
07/31/40	29.55	867.45
08/03/40	29.45	867.55
08/10/40	28.80	868.20
08/17/40	21.54	875.46
08/24/40	21.06	875.94
08/31/40	22.03	874.97
09/07/40	30.54	866.46
09/14/40	31.00	866.00
09/21/40	23.61	873.39
09/28/40	32.76	864.24
10/05/40	25.55	871.45
10/12/40	34.26	862.74
10/19/40	28.08	868.92
10/26/40	34.88	862.12
11/02/40	27.49	869.51
11/09/40	29.26	867.74
11/16/40	34.50	862.50
11/23/40	27.23	869.77
11/30/40	26.64	870.36
12/07/40	26.88	870.12
12/14/40	27.57	869.43
12/21/40	26.60	870.40
12/28/40	33.53	863.47
01/04/41	25.23	871.77
01/11/41	33.90	863.10
01/18/41	25.43	871.57
01/25/41	25.11	871.89
02/01/41	33.51	863.49
02/08/41	33.58	863.42
02/15/41	25.58	871.42
02/22/41	25.79	871.21
03/01/41	25.78	871.22
03/08/41	33.28	863.72
03/15/41	25.37	871.63
03/23/41	24.98	872.02
03/29/41	25.43	871.57
04/05/41	25.52	871.48
04/12/41	24.36	872.64
04/19/41	23.57	873.43
04/26/41	24.80	872.20
05/03/41	23.39	873.61
05/10/41	22.73	874.27
05/17/41	23.39	873.61
05/24/41	31.47	865.53
05/31/41	22.91	874.09
06/07/41	22.86	874.14
06/14/41	24.20	872.80
06/21/41	25.90	871.10
06/28/41	25.94	871.06
07/05/41	24.94	872.06
07/12/41	25.87	871.13
07/19/41	27.16	869.84
07/26/41	34.87	862.13
07/30/41	36.14	860.86
07/31/41	35.61	861.39
08/01/41	28.28	868.72
08/09/41	35.91	861.09
08/16/41	34.94	862.06
08/23/41	28.02	868.98
08/30/41	27.09	869.91
09/06/41	26.05	870.95
09/13/41	33.67	863.33
09/20/41	27.36	869.64
09/27/41	35.28	861.72
10/04/41	27.38	869.62
10/11/41	35.24	861.76
10/18/41	28.10	868.90
10/25/41	36.20	860.80
11/01/41	36.59	860.41
11/08/41	36.60	860.40
11/15/41	36.57	860.43
11/22/41	28.77	868.23
11/29/41	28.92	868.08
12/06/41	29.85	867.15
12/13/41	29.37	867.63
12/20/41	29.87	867.13
12/27/41	28.49	868.51
01/04/42	27.46	869.54
01/10/42	37.99	859.01
01/17/42	29.66	867.34
01/24/42	29.19	867.81
01/31/42	29.77	867.23
02/07/42	29.04	867.96
02/14/42	28.87	868.13
02/21/42	36.59	860.41
02/28/42	28.97	868.03
03/07/42	28.81	868.19
03/14/42	28.60	868.40
03/21/42	28.37	868.63
03/28/42	27.76	869.24
04/04/42	27.66	869.34
04/11/42	27.85	869.15
04/18/42	35.83	861.17
04/25/42	28.34	868.66
05/02/42	27.83	869.17
05/09/42	27.97	869.03
05/16/42	27.20	869.80
05/23/42	27.22	869.78
05/30/42	27.07	869.93
06/06/42	28.76	868.24
06/14/42	27.59	869.41
06/21/42	35.42	861.58
06/27/42	28.80	868.20
07/04/42	33.63	863.37
07/12/42	28.77	868.23
07/19/42	31.70	865.30
07/26/42	29.85	867.15
08/01/42	32.24	864.76
08/08/42	31.52	865.48
08/15/42	34.23	862.77
08/23/42	40.71	856.29
08/30/42	31.87	865.13
09/06/42	34.42	862.58
09/13/42	30.53	866.47
09/20/42	32.71	864.29
09/27/42	31.98	865.02
10/04/42	32.81	864.19
10/11/42	40.29	856.71
10/17/42	34.54	862.46
10/24/42	34.69	862.31
11/12/42	36.18	860.82
11/21/42	35.73	861.27
11/28/42	36.88	860.12
12/05/42	37.18	859.82
12/12/42	37.55	859.45
12/19/42	38.21	858.79
12/26/42	36.45	860.55

139-049-06ADB MP Elev (msl,ft)=900.03

West Fargo North Aquifer SI (ft.)=0-230

Date	Depth to Water (ft)	WL Elev (msl, ft)
12/21/37	26.25	873.78
12/25/37	26.35	873.68
01/01/38	26.40	873.63
01/08/38	26.44	873.59
01/15/38	26.44	873.59
01/22/38	26.27	873.76
01/29/38	26.17	873.86
02/05/38	25.40	874.63
02/12/38	25.85	874.18
02/19/38	25.96	874.07
02/26/38	25.90	874.13
03/05/38	26.05	873.98
03/12/38	26.20	873.83
03/19/38	26.52	873.51
03/26/38	26.52	873.51
04/02/38	26.42	873.61
04/09/38	26.40	873.63
04/16/38	25.73	874.30
04/30/38	25.64	874.39
05/07/38	25.53	874.50
05/14/38	25.73	874.30
05/21/38	25.81	874.22
05/28/38	25.90	874.13
06/04/38	26.19	873.84
06/11/38	26.42	873.61
06/18/38	27.00	873.03
06/25/38	27.94	872.09
07/05/38	28.61	871.42
07/09/38	29.11	870.92
07/18/38	29.90	870.13
07/23/38	29.90	870.13
07/30/38	30.19	869.84
08/10/38	30.94	869.09
08/13/38	30.27	869.76
08/20/38	30.27	869.76
08/27/38	31.56	868.47
09/10/38	31.61	868.42
09/17/38	31.85	868.18
09/24/38	31.92	868.11
10/01/38	31.94	868.09
10/08/38	32.48	867.55
11/26/38	30.06	869.97
12/03/38	30.61	869.42
12/10/38	30.40	869.63
12/17/38	30.40	869.63
12/29/38	30.19	869.84
12/31/38	30.06	869.97
01/14/39	30.19	869.84
02/04/39	29.90	870.13
02/18/39	30.06	869.97
01/01/40	35.56	864.47
01/08/40	35.15	864.88
07/13/40	37.15	862.88
07/17/40	37.55	862.48
07/19/40	37.17	862.86
07/24/40	37.90	862.13
07/27/40	38.08	861.95
07/31/40	36.70	863.33
08/03/40	36.85	863.18
08/10/40	36.21	863.82
08/17/40	37.22	862.81
08/24/40	36.59	863.44
08/31/40	37.67	862.36
09/07/40	37.81	862.22
09/14/40	38.14	861.89
09/21/40	38.15	861.88
09/27/40	41.08	858.95
09/28/40	41.38	858.65
09/29/40	40.64	859.39
09/30/40	41.59	858.44
10/01/40	41.91	858.12
10/02/40	41.95	858.08
10/03/40	41.91	858.12
10/04/40	41.93	858.10
10/05/40	41.88	858.15
10/06/40	41.18	858.85
10/07/40	41.70	858.33
10/08/40	42.15	857.88
10/09/40	42.36	857.67
10/10/40	42.65	857.38
10/11/40	43.13	856.90
10/12/40	42.63	857.40
10/13/40	41.89	858.14
10/14/40	42.49	857.54
10/15/40	42.75	857.28
10/16/40	42.78	857.25
10/17/40	43.18	856.85
10/18/40	43.27	856.76
10/19/40	43.09	856.94
10/20/40	42.41	857.62
10/21/40	43.01	857.02
10/22/40	43.50	856.53
10/23/40	43.47	856.56
10/24/40	43.44	856.59
10/25/40	43.64	856.39
10/26/40	43.47	856.56
10/27/40	42.47	857.56
10/28/40	43.11	856.92
10/29/40	43.39	856.64
10/30/40	43.56	856.47
10/31/40	43.53	856.50
11/01/40	43.56	856.47
11/02/40	43.55	856.48
11/03/40	42.83	857.20
11/04/40	43.43	856.60
11/05/40	43.68	856.35
11/06/40	43.69	856.34
11/07/40	43.99	856.04
11/08/40	44.01	856.02
11/09/40	43.58	856.45
11/10/40	42.91	857.12
11/11/40	43.09	856.94
11/12/40	43.18	856.85
11/13/40	43.27	856.76
11/14/40	43.58	856.45
11/15/40	43.73	856.30
11/16/40	43.87	856.16
11/17/40	43.06	856.97
11/18/40	43.58	856.45
11/19/40	43.93	856.10
11/20/40	43.81	856.22
11/21/40	42.79	857.24
11/22/40	43.35	856.68
11/23/40	43.52	856.51
11/24/40	42.65	857.38
11/25/40	43.23	856.80
11/26/40	43.46	856.57
11/27/40	43.23	856.80
11/28/40	43.20	856.83
11/29/40	43.39	856.64
11/30/40	43.30	856.73
12/01/40	42.71	857.32
12/02/40	43.35	856.68
12/03/40	43.59	856.44
12/04/40	43.70	856.33
12/05/40	43.91	856.12
12/06/40	43.81	856.22
12/07/40	43.69	856.34
12/08/40	42.35	857.68
12/09/40	42.85	857.18
12/10/40	43.03	857.00
12/11/40	43.20	856.83
12/12/40	43.22	856.81
12/13/40	43.10	856.93
12/14/40	42.94	857.09
12/15/40	42.86	857.17
12/16/40	43.12	856.91
12/17/40	43.43	856.60
12/18/40	43.40	856.63
12/19/40	43.35	856.68
12/20/40	43.41	856.62
12/28/40	41.65	858.38
12/29/40	41.38	858.65
01/04/41	40.88	859.15
01/11/41	41.25	858.78
01/12/41	41.37	858.66
01/13/41	42.03	858.00
01/14/41	41.97	858.06
01/15/41	42.13	857.90
01/16/41	42.12	857.91
01/17/41	42.34	857.69
01/18/41	41.64	858.39
01/19/41	41.62	858.41
01/20/41	42.01	858.02
01/21/41	42.23	857.80
01/22/41	42.42	857.61
01/23/41	42.16	857.87
01/24/41	42.21	857.82
01/25/41	42.06	857.97
01/26/41	41.47	858.56
01/27/41	41.79	858.24
01/28/41	41.94	858.09
01/29/41	42.04	857.99
01/30/41	42.00	858.03
01/31/41	42.20	857.83
02/01/41	41.86	858.17
02/02/41	41.64	858.39
02/03/41	41.92	858.11
02/04/41	41.98	858.05
02/05/41	42.13	857.90
02/06/41	42.10	857.93
02/07/41	42.16	857.87
02/08/41	41.49	858.54
02/09/41	41.47	858.56
02/10/41	41.83	858.20
02/11/41	42.09	857.94
02/12/41	42.14	857.89
02/13/41	42.33	857.70
02/14/41	42.37	857.66
02/15/41	42.08	857.95
02/16/41	41.51	858.52
02/17/41	42.06	857.97
02/18/41	42.13	857.90
02/19/41	42.31	857.72
02/20/41	42.45	857.58
02/21/41	42.54	857.49
02/22/41	42.19	857.84
02/23/41	41.54	858.49
02/24/41	41.87	858.16
02/25/41	42.14	857.89
02/26/41	42.13	857.90
02/27/41	42.24	857.79
02/28/41	42.02	858.01
03/01/41	41.99	858.04
03/08/41	40.69	859.34
03/09/41	41.09	858.94
03/10/41	41.52	858.51
03/11/41	41.62	858.41
03/12/41	41.85	858.18
03/13/41	42.05	857.98
03/14/41	41.96	858.07
03/15/41	41.81	858.22
03/16/41	41.52	858.51
03/17/41	41.91	858.12
03/18/41	41.73	858.30
03/19/41	41.57	858.46
03/20/41	41.91	858.12
03/21/41	42.06	857.97
03/22/41	41.57	858.46
03/23/41	41.31	858.72
03/24/41	41.79	858.24
03/25/41	42.06	857.97
03/26/41	41.91	858.12
03/27/41	42.35	857.68
03/28/41	42.40	857.63
03/29/41	42.21	857.82
03/30/41	41.25	858.78
03/31/41	42.03	858.00
04/01/41	42.24	857.79
04/02/41	42.19	857.84
04/03/41	42.22	857.81
04/04/41	42.21	857.82
04/05/41	41.66	858.37
04/06/41	41.10	858.93
04/08/41	40.83	859.20
04/10/41	40.98	859.05
04/12/41	39.82	860.21
04/13/41	39.95	860.08
04/14/41	39.91	860.12
04/15/41	40.31	859.72
04/16/41	40.24	859.79
04/17/41	40.10	859.93
04/18/41	40.05	859.98
04/19/41	40.08	859.95
04/20/41	39.46	860.57
04/21/41	39.98	860.05
04/22/41	40.03	860.00
04/23/41	40.05	859.98
04/24/41	40.10	859.93
04/25/41	40.10	859.93
04/26/41	39.95	860.08
04/27/41	39.35	860.68
04/28/41	39.41	860.62
04/29/41	39.57	860.46
04/30/41	39.59	860.44
05/01/41	39.67	860.36
05/02/41	40.10	859.93
05/03/41	39.95	860.08
05/04/41	39.48	860.55
05/05/41	40.00	860.03
05/06/41	40.16	859.87
05/07/41	40.17	859.86
05/08/41	40.02	860.01
05/09/41	40.13	859.90
05/10/41	40.01	860.02
05/12/41	39.69	860.34
05/13/41	39.94	860.09
05/14/41	39.98	860.05
05/15/41	40.06	859.97
05/16/41	40.04	859.99
05/17/41	39.74	860.29
05/18/41	39.13	860.90
05/19/41	39.69	860.34
05/20/41	39.81	860.22
05/21/41	40.10	859.93
05/22/41	40.18	859.85
05/23/41	40.27	859.76
05/24/41	40.03	860.00
05/25/41	39.32	860.71
05/26/41	39.73	860.30
05/27/41	39.75	860.28
05/28/41	39.82	860.21
05/29/41	39.86	860.17
05/30/41	39.16	860.87
05/31/41	39.00	861.03
06/01/41	39.01	861.02
06/02/41	39.52	860.51
06/03/41	39.93	860.10
06/04/41	40.04	859.99
06/05/41	40.24	859.79
06/06/41	39.72	860.31
06/07/41	39.11	860.92
06/08/41	38.69	861.34
06/09/41	39.31	860.72
06/10/41	39.43	860.60
06/11/41	38.84	861.19
06/12/41	39.03	861.00
06/13/41	39.33	860.70
06/14/41	39.39	860.64
06/15/41	38.70	861.33
06/16/41	40.12	859.91
06/17/41	40.75	859.28
06/18/41	40.95	859.08
06/19/41	41.18	858.85
06/20/41	41.55	858.48
06/21/41	41.11	858.92
06/22/41	40.62	859.41
06/23/41	41.93	858.10
06/24/41	42.64	857.39
06/25/41	42.93	857.10
06/26/41	42.69	857.34
06/27/41	42.76	857.27
06/28/41	42.36	857.67
06/29/41	42.13	857.90
06/30/41	42.60	857.43
07/01/41	42.48	857.55

139-049-06ADB **(Continued)** MP Elev (msl,ft)=900.03

West Fargo North Aquifer Sl (ft.)=0-230

Date	Depth to Water (ft)	WL Elev (msl, ft)	Date	Depth to Water (ft)	WL Elev (msl, ft)	Date	Depth to Water (ft)	WL Elev (msl, ft)	Date	Depth to Water (ft)	WL Elev (msl, ft)
07/02/41	42.76	857.27	09/20/41	43.27	856.76	12/19/41	46.57	853.46	03/21/42	44.61	855.42
07/03/41	42.28	857.75	09/21/41	42.63	857.40	12/20/41	45.84	854.19	03/22/42	43.81	856.22
07/04/41	41.44	858.59	09/22/41	43.32	856.71	12/21/41	44.97	855.06	03/23/42	44.70	855.33
07/05/41	41.08	858.95	09/23/41	43.33	856.70	12/27/41	44.02	856.01	03/24/42	44.64	855.39
07/06/41	41.13	858.90	09/24/41	43.16	856.87	12/28/41	44.10	855.93	03/25/42	44.28	855.75
07/07/41	41.71	858.32	09/25/41	43.30	856.73	12/29/41	44.99	855.04	03/26/42	43.97	856.06
07/08/41	42.08	857.95	09/26/41	43.58	856.45	12/30/41	45.46	854.57	03/27/42	43.75	856.28
07/09/41	42.41	857.62	09/27/41	43.34	856.69	12/31/41	45.29	854.74	03/28/42	43.55	856.48
07/10/41	42.57	857.46	10/04/41	43.24	856.79				03/29/42	43.21	856.82
07/11/41	42.43	857.60	10/05/41	42.59	857.44	01/01/42	44.20	855.83	03/30/42	44.10	855.93
07/12/41	42.44	857.59	10/06/41	43.28	856.75	01/04/42	44.16	855.87	03/31/42	43.96	856.07
07/13/41	41.83	858.20	10/07/41	43.24	856.79	01/10/42	46.22	853.81	04/01/42	43.98	856.05
07/14/41	42.63	857.40	10/08/41	43.21	856.82	01/12/42	46.24	853.79	04/02/42	43.83	856.20
07/15/41	42.99	857.04	10/09/41	43.56	856.47	01/13/42	46.69	853.34	04/03/42	43.69	856.34
07/16/41	42.67	857.36	10/10/41	44.15	855.88	01/14/42	46.51	853.52	04/04/42	43.54	856.49
07/17/41	42.69	857.34	10/11/41	43.77	856.26	01/15/42	46.51	853.52	04/05/42	43.31	856.72
07/18/41	42.95	857.08	10/12/41	43.26	856.77	01/16/42	46.43	853.60	04/06/42	43.42	856.61
07/19/41	42.51	857.52	10/13/41	43.63	856.40	01/17/42	46.05	853.98	04/07/42	43.92	856.11
07/20/41	41.83	858.20	10/14/41	43.99	856.04	01/18/42	45.40	854.63	04/08/42	44.16	855.87
07/21/41	42.63	857.40	10/15/41	44.25	855.78	01/19/42	46.15	853.88	04/09/42	43.96	856.07
07/22/41	43.36	856.67	10/16/41	44.29	855.74	01/20/42	46.00	854.03	04/10/42	44.08	855.95
07/23/41	43.27	856.76	10/17/41	44.45	855.58	01/21/42	46.28	853.75	04/11/42	43.93	856.10
07/24/41	43.54	856.49	10/18/41	44.30	855.73	01/22/42	46.15	853.88	04/12/42	43.15	856.88
07/25/41	43.92	856.11	10/19/41	44.45	856.58	01/23/42	45.90	854.13	04/13/42	44.20	855.83
07/26/41	43.96	856.07	10/20/41	44.36	855.67	01/24/42	45.39	854.64	04/14/42	43.99	856.04
07/27/41	43.13	856.90	10/21/41	44.51	855.52	01/25/42	44.49	855.54	04/15/42	44.17	855.86
07/28/41	44.18	855.85	10/22/41	44.76	855.27	01/26/42	45.51	854.52	04/16/42	44.20	855.83
07/29/41	44.92	855.11	10/23/41	45.00	855.03	01/27/42	45.70	854.33	04/17/42	44.27	855.76
07/30/41	44.85	855.18	10/24/41	44.96	855.07	01/28/42	45.50	854.53	04/18/42	44.25	855.78
07/31/41	44.92	855.11	10/26/41	43.51	856.52	01/29/42	46.39	853.64	04/19/42	43.50	856.53
08/01/41	45.01	855.02	10/27/41	44.55	855.48	01/30/42	45.57	854.46	04/20/42	43.97	856.06
08/02/41	44.79	855.24	10/28/41	44.96	855.07	01/31/42	45.00	855.03	04/21/42	44.10	855.93
08/03/41	44.09	855.94	10/29/41	45.03	855.00	02/01/42	44.15	855.88	04/22/42	44.04	855.99
08/04/41	44.47	855.56	10/30/41	45 11	854.92	02/02/42	45.00	855.03	04/23/42	44.12	855.91
08/05/41	44.91	855.12	10/31/41	45.39	854.64	02/03/42	44.96	855.07	04/24/42	44.79	855.24
08/06/41	44.97	855.06	11/01/41	45 19	854.84	02/04/42	45.21	854.82	04/25/42	44.22	855.81
08/07/41	44.53	855.50	11/02/41	44 23	855.80	02/05/42	45.22	854.81	04/26/42	43.59	856.44
08/08/41	44.73	855.30	11/03/41	44 88	855.15	02/06/42	45.52	854.51	04/27/42	43.94	856.09
08/09/41	44.23	855.80	11/04/41	45.33	854.70	02/07/42	45.31	854.72	04/28/42	44.32	855.71
08/10/41	43.22	856.81	11/05/41	45.33	854.70	02/08/42	44.38	855.65	04/29/42	44.54	855.49
08/11/41	43.81	856.22	11/06/41	45.21	854.82	02/09/42	44.65	855.38	04/30/42	44.30	855.73
08/12/41	44.23	855.80	11/07/41	45.26	854.77	02/10/42	44.74	855.29	05/01/42	44.13	855.90
08/13/41	44.93	855.10	11/08/41	45 44	854.59	02/11/42	44.99	855.04	05/02/42	43.55	856.48
08/14/41	43.66	856.37	11/09/41	44.63	855.40	02/12/42	45.11	854.92	05/03/42	43.11	856.92
08/15/41	43.77	856.26	11/10/41	45.24	854.79	02/13/42	45.26	854.77	05/04/42	43.53	856.50
08/16/41	43.68	856.35	11/11/41	45.24	854.79	02/14/42	44.83	855.20	05/05/42	43.74	856.29
08/17/41	42.78	857.25	11/12/41	45.23	854.80	02/15/42	43.99	856.04	05/06/42	43.69	856.34
08/18/41	43.12	856.91	11/13/41	45.33	854.70	02/16/42	44.29	855.74	05/07/42	43.77	856.26
08/19/41	43.22	856.81	11/14/41	45.35	854.68	02/17/42	44.46	855.57	05/08/42	44.06	855.97
08/20/41	43.20	856.83	11/15/41	44.88	855.15	02/18/42	45.26	854.77	05/09/42	43.95	856.08
08/21/41	43.20	856.83	11/16/41	44.15	855.88	02/19/42	44.65	855.38	05/10/42	43.99	856.04
08/22/41	43.07	856.96	11/17/41	45.00	855.03	02/20/42	45.10	854.93	05/11/42	43.45	856.58
08/23/41	42.68	857.35	11/18/41	45.24	854.79	02/21/42	44.70	855.33	05/12/42	43.56	856.47
08/24/41	42.15	857.88	11/19/41	44.95	855.08	02/22/42	43.75	856.28	05/13/42	43.55	856.48
08/25/41	42.75	857.28	11/20/41	44.13	855.90	02/23/42	44.45	855.58	05/14/42	43.39	856.64
08/26/41	43.02	857.01	11/21/41	44.67	855.36	02/24/42	44.72	855.31	05/15/42	43.66	856.37
08/27/41	42.98	857.05	11/22/41	44.36	855.67	02/25/42	44.83	855.20	05/16/42	43.40	856.63
08/28/41	43.08	856.95	11/23/41	43.47	856.56	02/26/42	44.94	855.09	05/17/42	42.60	857.43
08/29/41	43.03	857.00	11/24/41	44.76	855.27	02/27/42	45.21	854.82	05/18/42	42.85	857.18
08/30/41	42.86	857.17	11/25/41	45.23	854.80	02/28/42	44.99	855.04	05/19/42	42.97	857.06
08/31/41	42.60	857.43	11/26/41	45.46	854.57	03/01/42	45.25	854.78	05/20/42	43.16	856.87
09/01/41	42.81	857.22	11/27/41	45.56	854.47	03/02/42	45.25	854.78	05/21/42	43.22	856.81
09/02/41	43.38	856.65	11/28/41	45.59	854.44	03/03/42	45.01	855.02	05/22/42	43.53	856.50
09/03/41	43.26	856.77	11/29/41	45.42	854.61	03/04/42	45.02	855.01	05/23/42	43.17	856.86
09/04/41	43.21	856.82	11/30/41	44.70	855.33	03/05/42	44.95	855.08	05/24/42	42.68	857.35
09/05/41	43.19	856.84	12/01/41	45.61	854.42	03/06/42	44.81	855.22	05/25/42	43.38	856.65
09/06/41	42.86	857.17	12/02/41	45.68	854.35	03/07/42	44.78	855.25	05/26/42	43.69	856.34
09/07/41	42.26	857.77	12/03/41	45.64	854.39	03/08/42	44.48	855.55	05/27/42	43.83	856.20
09/08/41	42.78	857.25	12/04/41	46.07	853.96	03/09/42	44.96	855.07	05/28/42	43.93	856.10
09/09/41	42.84	857.19	12/05/41	46.09	853.94	03/10/42	45.26	854.77	05/29/42	43.58	856.45
09/10/41	43.29	856.74	12/06/41	45.57	854.46	03/11/42	44.78	855.25	05/30/42	42.93	857.10
09/11/41	43.47	856.56	12/07/41	44.57	855.46	03/12/42	44.70	855.33	05/31/42	42.90	857.13
09/12/41	43.13	856.90	12/08/41	45.77	854.26	03/13/42	44.65	855.38	06/01/42	43.36	856.67
09/13/41	42.87	857.16	12/09/41	45.97	854.06	03/14/42	44.53	855.50	06/02/42	43.77	856.26
09/14/41	42.22	857.81	12/13/41	45.21	854.82	03/15/42	43.59	856.44	06/03/42	43.92	856.11
09/15/41	42.99	857.04	12/14/41	44.82	855.21	03/16/42	43.93	856.10	06/04/42	44.02	856.01
09/16/41	43.14	856.89	12/15/41	45.53	854.50	03/17/42	43.95	856.08	06/05/42	43.90	856.13
09/17/41	43.31	856.72	12/16/41	46.29	853.74	03/18/42	44.37	855.66	06/06/42	43.31	856.72
09/18/41	43.59	856.44	12/17/41	46.24	853.79	03/19/42	44.37	855.66	06/07/42	42.76	857.27
09/19/41	43.68	856.35	12/18/41	46.44	853.59	03/20/42	44.52	855.51	06/08/42	43.68	856.35

139-049-06ADB **(Continued)** MP Elev (msl,ft)=900.03

West Fargo North Aquifer SI (ft.)=0-230

Date	Depth to Water (ft)	WL Elev (msl, ft)	Date	Depth to Water (ft)	WL Elev (msl, ft)	Date	Depth to Water (ft)	WL Elev (msl, ft)	Date	Depth to Water (ft)	WL Elev (msl, ft)
06/09/42	43.19	856.84	09/18/42	49.55	850.48	12/20/42	52.28	847.75	03/09/43	51.13	848.90
06/10/42	44.26	855.77	09/19/42	49.35	850.68	12/21/42	52.63	847.40	03/10/43	51.03	849.00
06/11/42	44.33	855.70	09/20/42	47.79	852.24	12/22/42	52.68	847.35	03/11/43	50.99	849.04
06/12/42	44.60	855.43	09/21/42	49.83	850.20	12/23/42	52.63	847.40	03/12/43	51.38	848.65
06/13/42	43.19	856.84	09/22/42	49.53	850.50	12/24/42	52.58	847.45	03/13/43	51.35	848.68
06/14/42	43.53	856.50	09/23/42	49.46	850.57	12/25/42	51.88	848.15	03/14/43	51.13	848.90
06/15/42	44.31	855.72	09/24/42	49.74	850.29	12/26/42	51.43	848.60	03/15/43	51.31	848.72
06/16/42	44.60	855.43	09/25/42	49.98	850.05	12/27/42	51.33	848.70	03/16/43	50.98	849.05
06/17/42	45.04	854.99	09/26/42	49.88	850.15	12/28/42	52.41	847.62	03/17/43	50.95	849.08
06/18/42	45.42	854.61	09/27/42	48.76	851.27	12/29/42	52.48	847.55	03/18/43	51.20	848.83
06/19/42	45.23	854.80	09/28/42	50.29	849.74	12/30/42	52.63	847.40	03/19/43	51.15	848.88
06/20/42	44.83	855.20	09/29/42	50.32	849.71	12/31/42	52.34	847.69	03/20/43	51.08	848.95
06/22/42	44.64	855.39	09/30/42	50.00	850.03				03/21/43	51.08	848.95
06/23/42	45.32	854.71	10/01/42	50.03	850.00	01/01/43	51.75	848.28	03/22/43	51.73	848.30
06/24/42	45.51	854.52	10/02/42	49.92	850.11	01/02/43	51.33	848.70	03/23/43	52.03	848.00
06/25/42	45.26	854.77	10/03/42	49.91	850.12	01/03/43	51.28	848.75	03/24/43	51.28	848.75
06/26/42	45.51	854.52	10/04/42	48.48	851.55	01/04/43	51.63	848.40	03/25/43	52.21	847.82
06/27/42	45.09	854.94	10/05/42	48.97	851.06	01/05/43	51.83	848.20	03/26/43	52.28	847.75
06/28/42	44.51	855.52	10/06/42	49.69	850.34	01/06/43	52.18	847.85	03/27/43	51.58	848.45
06/29/42	45.18	854.85	10/07/42	49.41	850.62	01/07/43	52.28	847.75	03/28/43	51.68	848.35
06/30/42	45.68	854.35	10/08/42	49.60	850.43	01/08/43	52.43	847.60	03/29/43	51.98	848.05
07/01/42	45.89	854.14	10/09/42	49.56	850.47	01/09/43	52.53	847.50	03/30/43	51.48	848.55
07/02/42	46.01	854.02	10/10/42	49.65	850.38	01/10/43	51.73	848.30	03/31/43	50.51	849.52
07/03/42	46.02	854.01	10/11/42	47.53	852.50	01/11/43	51.93	848.10	04/01/43	49.68	850.35
07/04/42	44.65	855.38	10/12/42	49.83	850.20	01/12/43	52.13	847.90	04/02/43	50.43	849.60
07/05/42	44.39	855.64	10/13/42	50.00	850.03	01/13/43	52.13	847.90	04/03/43	50.17	849.86
07/06/42	45.54	854.49	10/14/42	49.98	850.05	01/14/43	52.01	848.02	04/04/43	49.68	850.35
07/07/42	46.68	853.35	10/15/42	49.98	850.05	01/15/43	51.85	848.18	04/05/43	50.03	850.00
07/08/42	46.48	853.55	10/16/42	49.88	850.15	01/16/43	51.93	848.10	04/06/43	49.58	850.45
07/09/42	47.04	852.99	10/17/42	49.78	850.25	01/17/43	51.83	848.20	04/07/43	49.61	850.42
07/10/42	47.14	852.89	10/18/42	49.78	850.25	01/18/43	52.48	847.55	04/08/43	49.35	850.68
07/11/42	47.12	852.91	10/19/42	50.03	850.00	01/19/43	52.23	847.80	04/09/43	49.58	850.45
07/13/42	47.24	852.79	10/20/42	50.08	849.95	01/20/43	52.20	847.83	04/11/43	49.00	851.03
07/14/42	47.73	852.30	10/21/42	50.33	849.70	01/21/43	51.90	848.13	04/12/43	49.38	850.65
07/15/42	47.82	852.21	10/22/42	50.28	849.75	01/22/43	51.98	848.05	04/13/43	49.35	850.68
07/16/42	48.36	851.67	10/23/42	50.73	849.30	01/23/43	51.78	848.25	04/14/43	49.73	850.30
07/17/42	48.51	851.52	10/24/42	51.08	848.95	01/24/43	51.18	848.85	04/15/43	49.68	850.35
07/18/42	47.58	852.45	10/25/42	50.08	849.95	01/25/43	51.44	848.59	04/16/43	49.86	850.17
07/20/42	47.58	852.45	10/26/42	51.31	848.72	01/26/43	51.53	848.50	04/17/43	49.56	850.47
07/21/42	48.17	851.86	10/27/42	50.95	849.08	01/27/43	51.63	848.40	04/18/43	50.31	849.72
07/22/42	48.52	851.51	10/28/42	51.23	848.80	01/28/43	51.85	848.18	04/19/43	49.75	850.28
07/23/42	48.85	851.18	10/29/42	51.03	849.00	01/29/43	51.86	848.17	04/20/43	49.58	850.45
07/24/42	49.21	850.82	10/30/42	51.16	848.87	01/30/43	51.68	848.35	04/21/43	49.23	850.80
07/25/42	48.36	851.67	10/31/42	51.16	848.87	01/31/43	50.93	849.10	04/22/43	49.31	850.72
07/26/42	47.29	852.74	11/14/42	50.93	849.10	02/01/43	51.06	848.97	04/23/43	50.23	849.80
07/27/42	48.46	851.57	11/15/42	50.76	849.27	02/02/43	51.11	848.92	04/24/43	48.88	851.15
07/28/42	48.79	851.24	11/16/42	50.93	849.10	02/03/43	50.88	849.15	04/25/43	48.66	851.37
07/29/42	48.79	851.24	11/17/42	51.03	849.00	02/04/43	50.97	849.06	04/26/43	49.06	850.97
07/30/42	49.51	850.52	11/18/42	51.11	848.92	02/05/43	50.93	849.10	05/01/43	48.67	851.36
07/31/42	49.39	850.64	11/19/42	50.90	849.13	02/06/43	50.68	849.35	05/02/43	48.22	851.81
08/01/42	48.77	851.26	11/20/42	51.33	848.70	02/07/43	50.41	849.62	05/03/43	48.70	851.33
08/02/42	48.00	852.03	11/21/42	50.94	849.09	02/08/43	50.68	849.35	05/04/43	48.56	851.47
08/03/42	49.48	850.55	11/22/42	50.21	849.82	02/09/43	50.63	849.40	05/05/43	48.26	851.77
08/04/42	48.53	851.50	11/23/42	51.03	849.00	02/10/43	50.48	849.55	05/06/43	48.13	851.90
08/05/42	49.48	850.55	11/24/42	50.97	849.06	02/11/43	50.23	849.80	05/07/43	48.32	851.71
08/06/42	49.43	850.60	11/25/42	51.37	848.66	02/12/43	50.38	849.65	05/08/43	48.20	851.83
08/07/42	49.43	850.60	11/26/42	50.75	849.28	02/13/43	50.23	849.80	05/09/43	47.78	852.25
08/08/42	48.63	851.40	11/27/42	51.48	848.55	02/14/43	50.08	849.95	05/10/43	48.25	851.78
08/09/42	47.55	852.48	11/28/42	51.61	848.42	02/15/43	50.16	849.87	05/11/43	48.12	851.91
08/10/42	47.73	852.30	11/29/42	51.68	848.35	02/16/43	50.11	849.92	05/12/43	48.21	851.82
08/23/42	49.14	850.89	11/30/42	51.56	848.47	02/17/43	50.59	849.44	05/13/43	48.22	851.81
08/24/42	50.43	849.60	12/01/42	51.60	848.43	02/18/43	50.48	849.55	05/14/43	48.26	851.77
08/25/42	50.23	849.80	12/02/42	52.18	847.85	02/19/43	50.66	849.37	05/15/43	47.77	852.26
08/26/42	50.08	849.95	12/03/42	52.18	847.85	02/20/43	50.63	849.40	05/16/43	47.57	852.46
08/27/42	49.91	850.12	12/04/42	52.13	847.90	02/21/43	50.23	849.80	05/17/43	48.06	851.97
08/28/42	50.21	849.82	12/05/42	52.42	847.61	02/22/43	50.88	849.15	05/18/43	47.92	852.11
08/29/42	50.35	849.68	12/06/42	51.77	848.26	02/23/43	50.88	849.15	05/19/43	48.15	851.88
08/30/42	48.72	851.31	12/07/42	52.45	847.58	02/24/43	51.16	848.87	05/20/43	48.03	852.00
09/06/42	49.31	850.72	12/08/42	52.41	847.62	02/25/43	50.98	849.05	05/21/43	48.34	851.69
09/07/42	50.38	849.65	12/09/42	52.41	847.62	02/26/43	51.08	848.95	05/22/43	48.28	851.75
09/08/42	50.10	849.93	12/10/42	52.25	847.78	02/27/43	50.83	849.20	05/23/43	47.93	852.10
09/09/42	49.98	850.05	12/11/42	52.48	847.55	02/28/43	50.75	849.28	05/24/43	48.05	851.98
09/10/42	49.66	850.37	12/12/42	52.63	847.40	03/01/43	51.27	848.76	05/25/43	47.80	852.23
09/11/42	49.78	850.25	12/13/42	51.68	848.35	03/02/43	51.38	848.65	05/26/43	47.67	852.36
09/12/42	49.74	850.29	12/14/42	52.08	847.95	03/03/43	51.31	848.72	05/27/43	47.81	852.22
09/13/42	48.43	851.60	12/15/42	52.50	847.53	03/04/43	51.28	848.75	05/28/43	48.13	851.90
09/14/42	49.28	850.75	12/16/42	52.56	847.47	03/05/43	51.21	848.82	05/29/43	47.96	852.07
09/15/42	49.28	850.75	12/17/42	52.56	847.47	03/06/43	50.98	849.05	05/30/43	47.53	852.50
09/16/42	49.71	850.32	12/18/42	52.88	847.15	03/07/43	50.83	849.20	05/31/43	47.35	852.68
09/17/42	49.65	850.38	12/19/42	52.93	847.10	03/08/43	51.03	849.00	06/01/43	47.81	852.22

139-049-06ADB (Continued)

West Fargo North Aquifer

MP Elev (msl,ft)=900.03

SI (ft.)=0-230

Date	Depth to Water (ft)	WL Elev (msl, ft)
06/02/43	47.75	852.28
06/03/43	47.68	852.35
06/04/43	47.39	852.64
06/05/43	47.11	852.92
06/06/43	46.80	853.23
06/07/43	47.35	852.68
06/08/43	47.48	852.55
06/09/43	47.56	852.47
06/10/43	47.61	852.42
06/11/43	47.84	852.19
06/12/43	47.61	852.42
06/13/43	47.58	852.45
06/14/43	48.03	852.00
06/15/43	48.07	851.96
06/16/43	48.31	851.72
06/17/43	48.51	851.52
06/18/43	49.00	851.03
06/19/43	48.47	851.56
06/20/43	48.65	851.38
06/21/43	49.91	850.12
06/22/43	49.58	850.45
06/26/43	49.48	850.55
06/27/43	48.98	851.05
06/28/43	49.75	850.28
06/29/43	49.88	850.15
06/30/43	50.11	849.92
07/01/43	49.93	850.10
07/02/43	49.83	850.20
07/03/43	49.38	850.65
07/04/43	48.77	851.26
07/05/43	48.67	851.36
07/06/43	49.14	850.89
07/07/43	49.78	850.25
07/08/43	50.35	849.68
07/09/43	51.16	848.87
07/10/43	50.40	849.63
07/11/43	49.93	850.10
07/12/43	50.58	849.45
07/13/43	50.51	849.52
07/14/43	50.78	849.25
07/15/43	51.14	848.89
07/16/43	51.43	848.60
07/17/43	50.89	849.14
07/18/43	50.56	849.47
07/19/43	51.43	848.60
07/20/43	51.63	848.40
07/21/43	51.66	848.37
07/22/43	51.83	848.20
07/23/43	52.01	848.02
07/24/43	51.81	848.22
07/25/43	51.41	848.62
07/26/43	52.61	847.42
07/27/43	52.79	847.24
07/28/43	52.59	847.44
07/29/43	52.60	847.43
07/30/43	53.07	846.96
07/31/43	52.51	847.52
08/01/43	52.10	847.93
08/02/43	52.86	847.17
08/03/43	52.83	847.20
08/04/43	52.47	847.56
08/05/43	52.59	847.44
08/06/43	52.25	847.78
08/07/43	51.85	848.18
08/08/43	51.28	848.75
08/09/43	51.78	848.25
08/10/43	51.82	848.21
08/11/43	51.98	848.05
08/12/43	51.78	848.25
08/13/43	52.16	847.87
08/14/43	51.91	848.12
08/15/43	51.23	848.80
08/16/43	51.95	848.08
08/17/43	51.91	848.12
08/18/43	51.94	848.09
08/19/43	51.97	848.06
08/20/43	51.97	848.06
08/21/43	51.77	848.26
08/22/43	51.23	848.80
08/23/43	52.35	847.68
08/24/43	52.26	847.77
08/25/43	52.31	847.72
08/26/43	52.28	847.75
08/27/43	52.61	847.42
08/28/43	52.47	847.56
08/29/43	51.99	848.04
08/30/43	52.58	847.45
08/31/43	52.53	847.50
09/01/43	52.47	847.56
09/02/43	52.53	847.50
09/03/43	52.63	847.40
09/04/43	52.23	847.80
09/05/43	51.68	848.35
09/06/43	52.38	847.65
09/07/43	52.41	847.62
09/08/43	52.33	847.70
09/09/43	52.48	847.55
09/10/43	52.53	847.50
09/11/43	51.88	848.15
09/12/43	51.31	848.72
09/13/43	51.68	848.35
09/14/43	51.95	848.08
09/15/43	52.23	847.80
09/16/43	52.27	847.76
09/17/43	52.13	847.90
09/18/43	51.65	848.38
09/19/43	51.13	848.90
09/20/43	51.79	848.24
09/21/43	51.88	848.15
09/22/43	51.97	848.06
09/23/43	52.16	847.87
09/24/43	52.49	847.54
09/25/43	52.99	847.04
09/26/43	51.93	848.10
09/27/43	52.55	847.48
09/28/43	52.94	847.09
09/29/43	53.31	846.72
09/30/43	53.44	846.59
10/01/43	53.60	846.43
10/02/43	53.27	846.76
10/03/43	52.53	847.50
10/04/43	53.03	847.00
10/05/43	53.55	846.48
10/06/43	54.19	845.84
10/07/43	54.37	845.66
10/08/43	54.26	845.77
10/09/43	54.10	845.93
10/10/43	53.38	846.65
10/11/43	53.64	846.39
10/12/43	54.15	845.88
10/13/43	54.18	845.85
10/14/43	54.71	845.32
10/15/43	55.07	844.96
10/16/43	54.63	845.40
10/17/43	53.93	846.10
10/18/43	54.59	845.44
10/19/43	54.74	845.29
10/20/43	55.11	844.92
10/21/43	55.11	844.92
10/22/43	55.18	844.85
10/23/43	54.78	845.25
10/24/43	54.23	845.80
10/25/43	54.58	845.45
10/26/43	54.69	845.34
10/27/43	54.63	845.40
10/28/43	54.61	845.42
10/29/43	54.55	845.48
10/30/43	54.25	845.78
10/31/43	53.48	846.55
11/01/43	53.43	846.60
11/02/43	53.88	846.15
11/03/43	54.28	845.75
11/04/43	54.41	845.62
11/05/43	54.75	845.28
11/06/43	54.73	845.30
11/07/43	54.28	845.75
11/08/43	54.21	845.82
11/09/43	54.63	845.40
11/10/43	54.90	845.13
11/11/43	55.08	844.95
11/12/43	55.43	844.60
11/13/43	55.28	844.75
11/14/43	54.78	845.25
11/15/43	55.02	845.01
11/16/43	55.63	844.40
11/17/43	55.88	844.15
11/18/43	55.63	844.40
11/19/43	55.41	844.62
11/20/43	55.23	844.80
11/21/43	54.58	845.45
11/22/43	55.18	844.85
11/23/43	55.43	844.60
11/24/43	55.04	844.99
11/25/43	54.63	845.40
11/26/43	54.33	845.70
11/27/43	54.50	845.53
11/28/43	53.98	846.05
11/29/43	53.85	846.18
11/30/43	54.13	845.90
12/01/43	54.05	845.98
12/02/43	54.49	845.54
12/03/43	54.85	845.18
12/04/43	55.41	844.62
12/05/43	54.98	845.05
12/06/43	54.48	845.55
12/07/43	54.58	845.45
12/08/43	54.65	845.38
12/09/43	54.81	845.22
12/10/43	54.85	845.18
12/11/43	54.98	845.05
12/12/43	54.41	845.62
12/13/43	54.11	845.92
12/14/43	54.08	845.95
12/15/43	54.03	846.00
12/16/43	54.08	845.95
12/17/43	54.46	845.57
12/18/43	54.96	845.07
12/19/43	54.48	845.55
12/20/43	54.23	845.80
12/21/43	54.38	845.65
12/22/43	54.46	845.57
12/23/43	54.30	845.73
12/24/43	54.43	845.60
12/25/43	54.45	845.58
12/26/43	54.02	846.01
12/27/43	54.04	845.99
12/28/43	54.48	845.55
12/29/43	54.85	845.18
12/30/43	54.55	845.48
12/31/43	54.48	845.55
01/01/44	54.45	845.58
01/02/44	53.68	846.35
01/03/44	53.51	846.52
01/04/44	53.91	846.12
01/05/44	54.12	845.91
01/06/44	54.37	845.66
01/07/44	54.61	845.42
01/08/44	54.58	845.45
01/09/44	54.08	845.95
01/10/44	53.84	846.19
01/11/44	54.16	845.87
01/12/44	54.33	845.70
01/13/44	54.56	845.47
01/14/44	54.69	845.34
01/15/44	54.48	845.55
01/16/44	54.08	845.95
01/17/44	54.06	845.97
01/18/44	54.13	845.90
01/19/44	54.28	845.75
01/20/44	54.18	845.85
01/21/44	54.27	845.76
01/22/44	54.08	845.95
01/23/44	53.70	846.33
01/24/44	53.45	846.58
01/25/44	53.56	846.47
01/26/44	53.64	846.39
01/27/44	53.61	846.42
01/28/44	53.57	846.46
01/29/44	53.31	846.72
01/30/44	52.98	847.05
01/31/44	53.23	846.80
02/01/44	53.47	846.56
02/02/44	53.39	846.64
02/03/44	53.47	846.56
02/04/44	53.33	846.70
02/05/44	53.18	846.85
02/06/44	52.80	847.23
02/07/44	52.43	847.60
02/08/44	52.56	847.47
02/09/44	52.63	847.40
02/10/44	52.73	847.30
02/11/44	52.61	847.42
02/12/44	52.50	847.53
02/13/44	52.25	847.78
02/14/44	52.06	847.97
02/15/44	52.23	847.80
02/16/44	52.18	847.85
02/17/44	52.29	847.74
02/18/44	52.51	847.52
02/19/44	52.41	847.62
02/20/44	51.95	848.08
02/21/44	51.66	848.37
02/22/44	51.93	848.10
02/23/44	52.07	847.96
02/24/44	52.24	847.79
02/25/44	52.31	847.72
02/26/44	52.24	847.79
02/27/44	52.03	848.00
02/28/44	52.07	847.96
02/29/44	52.33	847.70
03/01/44	52.31	847.72
03/02/44	52.24	847.79
03/03/44	52.30	847.73
03/04/44	52.18	847.85
03/05/44	51.73	848.30
03/17/44	50.03	850.00
03/21/44	51.18	848.85
03/22/44	51.43	848.60
03/23/44	51.27	848.76
03/24/44	51.37	848.66
03/25/44	51.07	848.96
03/26/44	50.50	849.53
03/27/44	51.00	849.03
03/28/44	51.17	848.86
03/29/44	51.08	848.95
03/30/44	51.21	848.82
03/31/44	51.11	848.92
04/01/44	50.81	849.22
04/02/44	50.43	849.60
04/03/44	50.58	849.45
04/04/44	50.89	849.14
04/05/44	50.92	849.11
04/06/44	50.79	849.24
04/07/44	50.40	849.63
04/08/44	50.13	849.90
04/09/44	49.78	850.25
04/10/44	50.00	850.03
04/11/44	50.38	849.65
04/12/44	50.37	849.66
04/13/44	50.28	849.75
04/14/44	50.00	850.03
04/15/44	49.83	850.20
04/16/44	49.59	850.44
04/17/44	49.66	850.37
04/18/44	49.75	850.28
04/19/44	49.86	850.17
04/20/44	49.71	850.32
04/21/44	49.80	850.23
04/22/44	49.63	850.40
04/23/44	49.17	850.86
04/24/44	49.01	851.02
04/25/44	49.17	850.86
04/26/44	49.22	850.81
04/27/44	49.48	850.55
04/28/44	49.63	850.40
04/29/44	49.63	850.40
04/30/44	49.21	850.82
05/01/44	48.83	851.20
05/02/44	49.01	851.02

139-049-06ADB (Continued) MP Elev (msl,ft)=900.03

West Fargo North Aquifer SI (ft.)=0-230

Date	Depth to Water (ft)	WL Elev (msl, ft)
05/03/44	48.83	851.20
05/04/44	48.67	851.36
05/05/44	48.69	851.34
05/06/44	48.61	851.42
05/07/44	48.24	851.79
05/08/44	48.23	851.80
05/09/44	48.74	851.29
05/10/44	48.83	851.20
05/11/44	48.70	851.33
05/12/44	48.58	851.45
05/13/44	48.51	851.52
05/14/44	48.03	852.00
05/15/44	48.01	852.02
05/16/44	48.23	851.80
05/17/44	48.38	851.65
05/18/44	48.32	851.71
05/19/44	48.57	851.46
05/20/44	48.57	851.46
05/21/44	48.21	851.82
05/22/44	47.84	852.19
05/23/44	48.10	851.93
05/24/44	48.17	851.86
05/25/44	48.20	851.83
05/26/44	48.30	851.73
05/27/44	48.21	851.82
05/28/44	47.97	852.06
05/29/44	48.01	852.02
05/30/44	47.91	852.12
05/31/44	48.08	851.95
06/01/44	48.32	851.71
06/02/44	48.45	851.58
06/03/44	48.35	851.68
06/04/44	47.78	852.25
06/05/44	47.67	852.36
06/06/44	47.83	852.20
06/07/44	47.98	852.05
06/08/44	48.42	851.61
06/09/44	48.89	851.14
06/10/44	48.93	851.10
06/11/44	48.53	851.50
06/12/44	48.20	851.83
06/13/44	48.39	851.64
06/14/44	48.76	851.27
06/15/44	48.80	851.23
06/16/44	49.37	850.66
06/17/44	49.37	850.66
06/18/44	48.63	851.40
06/19/44	48.65	851.38
06/20/44	48.93	851.10
06/21/44	49.32	850.71
06/22/44	49.53	850.50
06/23/44	49.74	850.29
06/24/44	49.64	850.39
06/25/44	50.23	849.80
06/26/44	49.36	850.67
06/27/44	49.71	850.32
06/28/44	49.98	850.05
06/29/44	50.34	849.69
06/30/44	50.54	849.49
07/01/44	50.33	849.70
07/02/44	49.83	850.20
07/03/44	49.58	850.45
07/04/44	49.48	850.55
07/05/44	49.61	850.42
07/06/44	50.06	849.97
07/07/44	50.68	849.35
07/08/44	50.68	849.35
07/09/44	49.94	850.09
07/10/44	50.10	849.93
07/11/44	50.22	849.81
07/12/44	50.37	849.66
07/13/44	50.77	849.26
07/14/44	50.88	849.15
07/15/44	50.80	849.23
07/16/44	50.41	849.62
07/17/44	50.34	849.69
07/18/44	50.89	849.14
07/19/44	50.99	849.04
07/20/44	50.92	849.11
07/21/44	51.01	849.02
07/22/44	51.03	849.00
07/23/44	50.51	849.52
07/24/44	50.96	849.07
07/25/44	51.17	848.86
07/26/44	51.41	848.62
07/27/44	51.60	848.43
07/28/44	51.69	848.34
07/29/44	51.51	848.52
07/30/44	51.00	849.03
07/31/44	51.08	848.95
08/01/44	51.61	848.42
08/02/44	51.78	848.25
08/03/44	51.48	848.55
08/04/44	51.71	848.32
08/05/44	51.69	848.34
08/06/44	51.33	848.70
08/07/44	51.32	848.71
08/08/44	51.88	848.15
08/09/44	52.17	847.86
08/10/44	52.40	847.63
08/11/44	53.00	847.03
08/12/44	52.99	847.04
08/13/44	52.06	847.97
08/14/44	52.11	847.92
08/15/44	52.16	847.87
08/16/44	52.23	847.80
08/17/44	52.61	847.42
08/18/44	53.00	847.03
08/19/44	53.00	847.03
08/20/44	52.60	847.43
08/26/44	56.53	843.50
08/27/44	55.88	844.15
08/28/44	55.21	844.82
08/29/44	55.08	844.95
08/30/44	54.48	845.55
08/31/44	55.18	844.85
09/01/44	53.71	846.32
09/02/44	53.58	846.45
09/03/44	53.38	846.65
09/04/44	52.88	847.15
09/08/44	53.48	846.55
09/09/44	53.48	846.55
09/10/44	53.08	846.95
09/11/44	52.58	847.45
09/12/44	52.83	847.20
09/13/44	52.92	847.11
09/14/44	52.63	847.40
09/15/44	52.82	847.21
09/16/44	52.77	847.26
09/17/44	52.38	847.65
09/22/44	52.80	847.23
09/23/44	52.80	847.23
09/24/44	52.61	847.42
09/25/44	52.08	847.95
09/26/44	52.19	847.84
09/27/44	52.20	847.83
09/28/44	52.30	847.73
09/29/44	52.47	847.56
09/30/44	52.47	847.56
10/01/44	52.05	847.98
10/02/44	51.83	848.20
10/03/44	52.11	847.92
10/04/44	52.18	847.85
10/05/44	52.16	847.87
10/06/44	52.27	847.76
10/07/44	52.23	847.80
10/08/44	51.98	848.05
10/09/44	51.83	848.20
10/10/44	52.17	847.86
10/11/44	52.38	847.65
10/12/44	52.43	847.60
10/13/44	52.61	847.42
10/14/44	52.53	847.50
10/15/44	52.28	847.75
10/16/44	52.11	847.92
10/17/44	52.40	847.63
10/18/44	52.77	847.26
10/19/44	53.26	846.77
10/20/44	53.50	846.53
10/21/44	53.41	846.62
10/22/44	53.03	847.00
10/23/44	52.56	847.47
10/24/44	51.80	848.23
10/25/44	53.23	846.80
10/26/44	53.61	846.42
10/27/44	53.84	846.19
10/28/44	53.83	846.20
10/29/44	53.51	846.52
10/30/44	53.28	846.75
10/31/44	53.61	846.42
11/01/44	53.77	846.26
11/02/44	53.88	846.15
11/03/44	53.98	846.05
11/04/44	54.17	845.86
11/05/44	54.08	845.95
11/06/44	53.99	846.04
11/07/44	54.07	845.96
11/08/44	54.12	845.91
11/09/44	54.38	845.65
11/10/44	54.57	845.46
11/11/44	54.56	845.47
11/12/44	54.25	845.78
11/13/44	54.13	845.90
11/14/44	54.40	845.63
11/15/44	54.58	845.45
11/16/44	54.83	845.20
11/17/44	55.08	844.95
11/18/44	55.08	844.95
11/19/44	54.98	845.05
11/20/44	54.82	845.21
11/21/44	55.08	844.95
11/22/44	55.38	844.65
11/23/44	55.38	844.65
11/24/44	55.23	844.80
11/25/44	55.28	844.75
11/26/44	55.23	844.80
11/27/44	55.38	844.65
11/28/44	55.78	844.25
11/29/44	56.10	843.93
11/30/44	56.50	843.53
12/01/44	56.71	843.32
12/02/44	56.71	843.32
12/03/44	56.58	843.45
12/04/44	56.47	843.56
12/05/44	56.85	843.18
12/06/44	56.96	843.07
12/07/44	57.01	843.02
12/08/44	57.13	842.90
12/09/44	57.11	842.92
12/10/44	57.03	843.00
12/11/44	56.68	843.35
12/12/44	56.96	843.07
12/13/44	57.09	842.94
12/14/44	57.31	842.72
12/15/44	57.43	842.60
12/16/44	57.43	842.60
12/17/44	57.13	842.90
12/18/44	56.83	843.20
12/19/44	57.11	842.92
12/20/44	57.48	842.55
12/21/44	57.78	842.25
12/22/44	57.82	842.21
12/23/44	57.82	842.21
12/24/44	57.33	842.70
12/25/44	56.89	843.14
12/26/44	56.98	843.05
12/27/44	57.20	842.83
12/28/44	57.38	842.65
12/29/44	57.43	842.60
12/30/44	57.43	842.60
12/31/44	57.23	842.80
01/01/45	56.73	843.30
01/02/45	56.83	843.20
01/03/45	57.33	842.70
01/04/45	57.88	842.15
01/05/45	58.02	842.01
01/06/45	58.38	841.65
01/07/45	58.33	841.70
01/08/45	58.18	841.85
01/09/45	58.60	841.43
01/10/45	58.88	841.15
01/11/45	59.01	841.02
01/12/45	59.18	840.85
01/13/45	59.18	840.85
01/14/45	59.05	840.98
01/15/45	58.88	841.15
01/16/45	59.13	840.90
01/17/45	59.23	840.80
01/18/45	59.28	840.75
01/19/45	59.41	840.62
01/20/45	59.41	840.62
01/21/45	59.11	840.92
01/22/45	58.43	841.60
01/23/45	58.65	841.38
01/24/45	58.77	841.26
01/25/45	58.86	841.17
01/26/45	59.05	840.98
01/27/45	59.05	840.98
01/28/45	58.97	841.06
01/29/45	58.51	841.52
01/30/45	58.63	841.40
01/31/45	58.75	841.28
02/01/45	58.81	841.22
02/02/45	58.78	841.25
02/03/45	58.73	841.30
02/04/45	58.41	841.62
02/05/45	57.88	842.15
02/06/45	58.08	841.95
02/07/45	58.31	841.72
02/08/45	58.31	841.72
02/09/45	58.23	841.80
02/10/45	58.23	841.80
02/11/45	58.06	841.97
02/12/45	57.75	842.28
02/13/45	57.86	842.17
02/14/45	58.00	842.03
02/15/45	58.10	841.93
02/16/45	57.33	842.70
02/17/45	57.33	842.70
02/18/45	58.16	841.87
02/19/45	57.99	842.04
02/20/45	58.11	841.92
02/21/45	58.18	841.85
02/22/45	58.27	841.76
02/23/45	58.48	841.55
02/24/45	58.48	841.55
02/25/45	58.43	841.60
02/26/45	58.03	842.00
02/27/45	58.10	841.93
02/28/45	58.36	841.67
03/01/45	58.51	841.52
03/02/45	57.63	842.40
03/03/45	58.61	841.42
03/04/45	58.48	841.55
03/05/45	58.11	841.92
03/06/45	58.23	841.80
03/07/45	58.43	841.60
03/08/45	58.56	841.47
03/09/45	58.73	841.30
03/10/45	58.48	841.55
03/11/45	58.13	841.90
03/12/45	58.98	841.05
03/13/45	59.48	840.55
03/14/45	59.48	840.55
03/15/45	59.43	840.60
03/16/45	59.03	841.00
03/17/45	58.53	841.50
03/18/45	57.98	842.05
03/19/45	57.53	842.50
03/20/45	56.63	843.40
03/21/45	56.68	843.35
03/22/45	56.66	843.37
03/23/45	57.53	842.50
03/24/45	57.43	842.60
03/25/45	57.03	843.00
03/26/45	56.43	843.60
03/27/45	56.36	843.67
03/28/45	56.36	843.67
03/29/45	56.43	843.60

139-049-06ADB (Continued) MP Elev (msl,ft)=900.03

West Fargo North Aquifer SI (ft.)=0-230

Date	Depth to Water (ft)	WL Elev (msl, ft)	Date	Depth to Water (ft)	WL Elev (msl, ft)	Date	Depth to Water (ft)	WL Elev (msl, ft)	Date	Depth to Water (ft)	WL Elev (msl, ft)
03/30/45	56.48	843.55	06/18/45	56.23	843.80	09/14/45	61.08	838.95	12/04/45	62.18	837.85
03/31/45	56.48	843.55	06/19/45	56.44	843.59	09/15/45	61.03	839.00	12/05/45	62.21	837.82
04/01/45	56.13	843.90	06/20/45	56.66	843.37	09/16/45	60.66	839.37	12/06/45	62.29	837.74
04/02/45	55.63	844.40	06/21/45	56.93	843.10	09/17/45	60.61	839.42	12/07/45	62.41	837.62
04/03/45	55.88	844.15	06/22/45	57.16	842.87	09/18/45	60.83	839.20	12/08/45	62.38	837.65
04/04/45	55.95	844.08	06/23/45	57.16	842.87	09/19/45	60.98	839.05	12/09/45	62.08	837.95
04/05/45	56.01	844.02	06/24/45	57.11	842.92	09/20/45	60.91	839.12	12/10/45	61.83	838.20
04/06/45	56.08	843.95	06/25/45	57.43	842.60	09/21/45	61.18	838.85	12/11/45	62.13	837.90
04/07/45	56.07	843.96	06/26/45	57.38	842.65	09/22/45	61.13	838.90	12/12/45	62.18	837.85
04/08/45	55.88	844.15	06/27/45	57.15	842.88	09/23/45	60.73	839.30	12/13/45	62.28	837.75
04/09/45	55.16	844.87	06/28/45	57.71	842.32	09/24/45	60.63	839.40	12/21/45	63.13	836.90
04/10/45	55.43	844.60	06/29/45	58.20	841.83	09/25/45	60.96	839.07	12/22/45	63.13	836.90
04/11/45	55.49	844.54	06/30/45	58.16	841.87	09/26/45	61.08	838.95	12/23/45	62.78	837.25
04/12/45	55.53	844.50	07/01/45	57.83	842.20	09/27/45	61.33	838.70	12/24/45	61.93	838.10
04/13/45	55.61	844.42	07/02/45	57.58	842.45	09/28/45	61.26	838.77	12/25/45	61.53	838.50
04/14/45	55.68	844.35	07/03/45	57.88	842.15	09/29/45	61.18	838.85	12/26/45	61.41	838.62
04/15/45	55.58	844.45	07/04/45	57.85	842.18	09/30/45	60.81	839.22	12/27/45	61.76	838.27
04/16/45	54.93	845.10	07/05/45	57.33	842.70	10/01/45	60.36	839.67	12/28/45	61.95	838.08
04/17/45	54.88	845.15	07/11/45	58.68	841.35	10/02/45	60.84	839.19	12/29/45	61.88	838.15
04/18/45	54.98	845.05	07/12/45	58.78	841.25	10/03/45	61.03	839.00	12/30/45	61.63	838.40
04/19/45	55.18	844.85	07/13/45	58.80	841.23	10/04/45	61.11	838.92	12/31/45	61.25	838.78
04/20/45	55.43	844.60	07/14/45	58.73	841.30	10/05/45	61.03	839.00			
04/21/45	55.57	844.46	07/15/45	58.35	841.68	10/06/45	60.93	839.10	01/04/46	62.09	837.94
04/22/45	55.53	844.50	07/16/45	58.28	841.75	10/07/45	60.68	839.35	01/05/46	61.97	838.06
04/23/45	55.08	844.95	07/17/45	58.78	841.25	10/08/45	60.56	839.47	01/06/46	61.90	838.13
04/24/45	55.21	844.82	07/18/45	59.13	840.90	10/09/45	60.90	839.13	01/07/46	61.86	838.17
04/25/45	55.38	844.65	07/19/45	59.25	840.78	10/10/45	61.28	838.75	01/08/46	62.23	837.80
04/26/45	55.46	844.57	07/20/45	59.36	840.67	10/11/45	61.46	838.57	01/09/46	62.34	837.69
04/27/45	55.63	844.40	07/21/45	59.35	840.68	10/12/45	61.50	838.53	01/10/46	62.39	837.64
04/28/45	55.58	844.45	07/22/45	58.98	841.05	10/13/45	61.46	838.57	01/11/46	62.47	837.56
04/29/45	55.58	844.45	07/23/45	58.56	841.47	10/14/45	61.13	838.90	01/12/46	62.46	837.57
04/30/45	55.28	844.75	07/24/45	59.18	840.85	10/15/45	60.76	839.27	01/13/46	62.06	837.97
05/01/45	55.33	844.70	07/25/45	59.78	840.25	10/16/45	60.88	839.15	01/14/46	61.45	838.58
05/02/45	55.51	844.52	07/26/45	59.98	840.05	10/17/45	61.18	838.85	01/15/46	61.43	838.60
05/03/45	55.78	844.25	07/27/45	59.99	840.04	10/18/45	61.43	838.60	01/16/46	61.16	838.87
05/04/45	56.01	844.02	07/28/45	58.91	841.12	10/19/45	61.56	838.47	01/17/46	60.45	839.58
05/05/45	56.00	844.03	07/29/45	59.48	840.55	10/20/45	61.48	838.55	01/18/46	60.06	839.97
05/06/45	55.77	844.26	07/30/45	59.66	840.37	10/21/45	61.31	838.72	01/19/46	59.92	840.11
05/07/45	55.28	844.75	07/31/45	60.11	839.92	10/22/45	61.16	838.87	01/20/46	59.73	840.30
05/08/45	55.68	844.35	08/01/45	60.43	839.60	10/23/45	61.65	838.38	01/21/46	59.56	840.47
05/09/45	56.01	844.02	08/02/45	60.61	839.42	10/24/45	61.83	838.20	01/22/46	59.47	840.56
05/10/45	56.31	843.72	08/03/45	60.76	839.27	10/25/45	61.83	838.20	01/23/46	59.20	840.83
05/11/45	56.46	843.57	08/04/45	60.73	839.30	10/26/45	62.03	838.00	01/24/46	59.04	840.99
05/12/45	56.46	843.57	08/05/45	60.53	839.50	10/27/45	61.93	838.10	01/25/46	58.90	841.13
05/13/45	56.36	843.67	08/06/45	60.56	839.47	10/28/45	61.53	838.50	01/26/46	58.86	841.17
05/14/45	56.08	843.95	08/07/45	60.66	839.37	10/29/45	61.68	838.35	01/27/46	58.86	841.17
05/15/45	56.29	843.74	08/08/45	60.83	839.20	10/30/45	61.93	838.10	01/28/46	59.17	840.86
05/16/45	56.53	843.50	08/09/45	60.87	839.16	10/31/45	61.98	838.05	01/29/46	59.69	840.34
05/17/45	56.68	843.35	08/10/45	60.83	839.20	11/01/45	62.11	837.92	01/30/46	60.10	839.93
05/18/45	56.76	843.27	08/11/45	60.81	839.22	11/02/45	62.46	837.57	01/31/46	60.12	839.91
05/19/45	56.73	843.30	08/12/45	60.48	839.55	11/03/45	62.81	837.22	02/01/46	60.17	839.86
05/20/45	56.53	843.50	08/13/45	60.17	839.86	11/04/45	62.68	837.35	02/02/46	60.17	839.86
05/21/45	56.06	843.97	08/14/45	60.36	839.67	11/06/45	62.43	837.60	02/03/46	60.02	840.01
05/22/45	56.38	843.65	08/18/45	60.83	839.20	11/07/45	62.43	837.60	02/04/46	59.74	840.29
05/23/45	56.68	843.35	08/19/45	60.68	839.35	11/08/45	62.23	837.80	02/05/46	59.79	840.24
05/24/45	56.91	843.12	08/20/45	60.78	839.25	11/09/45	62.28	837.75	02/16/46	61.78	838.25
05/25/45	57.11	842.92	08/21/45	61.06	838.97	11/10/45	62.33	837.70	02/17/46	61.85	838.18
05/26/45	57.18	842.85	08/22/45	61.23	838.80	11/11/45	62.18	837.85	02/18/46	62.35	837.68
05/27/45	57.03	843.00	08/23/45	61.18	838.85	11/12/45	62.18	837.85	02/19/46	62.55	837.48
05/28/45	56.46	843.57	08/24/45	61.33	838.70	11/13/45	62.58	837.45	02/20/46	62.88	837.15
05/29/45	56.78	843.25	08/25/45	61.38	838.65	11/14/45	62.83	837.20	02/21/46	62.91	837.12
05/30/45	56.78	843.25	08/26/45	61.03	839.00	11/15/45	63.05	836.98	02/22/46	62.91	837.12
05/31/45	56.68	843.35	08/27/45	60.78	839.25	11/16/45	63.08	836.95	02/23/46	63.04	836.99
06/01/45	55.66	844.37	08/28/45	60.76	839.27	11/17/45	62.93	837.10	02/24/46	63.01	837.02
06/02/45	55.58	844.45	08/29/45	60.60	839.43	11/18/45	62.53	837.50	02/25/46	62.60	837.43
06/03/45	55.30	844.73	08/30/45	60.48	839.55	11/19/45	62.33	837.70	03/01/46	62.26	837.77
06/04/45	56.85	843.18	08/31/45	60.53	839.50	11/20/45	62.61	837.42	03/02/46	62.44	837.59
06/05/45	57.01	843.02	09/01/45	60.73	839.30	11/21/45	62.66	837.37	03/03/46	62.40	837.63
06/06/45	56.68	843.35	09/02/45	60.38	839.65	11/22/45	62.60	837.43	03/04/46	62.07	837.96
06/07/45	56.28	843.75	09/03/45	59.96	840.07	11/23/45	62.16	837.87	03/05/46	62.19	837.84
06/08/45	56.38	843.65	09/04/45	60.56	839.47	11/24/45	62.03	838.00	03/08/46	62.63	837.40
06/09/45	56.36	843.67	09/05/45	60.72	839.31	11/25/45	61.93	838.10	03/09/46	63.01	837.02
06/10/45	56.00	844.03	09/06/45	60.74	839.29	11/26/45	61.93	838.10	03/10/46	63.01	837.02
06/11/45	55.51	844.52	09/07/45	60.85	839.18	11/27/45	62.36	837.67	03/11/46	62.75	837.28
06/12/45	55.68	844.35	09/08/45	60.78	839.25	11/28/45	62.63	837.40	03/12/46	62.48	837.55
06/13/45	55.88	844.15	09/09/45	60.33	839.70	11/29/45	62.68	837.35	03/13/46	62.26	837.77
06/14/45	56.36	843.67	09/10/45	60.11	839.92	11/30/45	62.61	837.42	03/14/46	62.12	837.91
06/15/45	56.45	843.58	09/11/45	60.38	839.65	12/01/45	62.53	837.50	03/15/46	62.14	837.89
06/16/45	56.48	843.55	09/12/45	60.58	839.45	12/02/45	62.23	837.80	03/16/46	62.24	837.79
06/17/45	56.43	843.60	09/13/45	60.68	839.35	12/03/45	62.17	837.86	03/17/46	62.23	837.80

139-049-06ADB **(Continued)**

West Fargo North Aquifer

MP Elev (msl,ft)=900.03

SI (ft.)=0-230

Date	Depth to Water (ft)	WL Elev (msl, ft)	Date	Depth to Water (ft)	WL Elev (msl, ft)	Date	Depth to Water (ft)	WL Elev (msl, ft)	Date	Depth to Water (ft)	WL Elev (msl, ft)
03/18/46	61.85	838.18	06/06/46	59.48	840.55	08/28/46	61.96	838.07	11/18/46	63.22	836.81
03/19/46	61.61	838.42	06/07/46	59.74	840.29	08/29/46	62.06	837.97	11/19/46	63.20	836.83
03/20/46	61.37	838.66	06/08/46	59.74	840.29	08/30/46	62.14	837.89	11/20/46	63.21	836.82
03/21/46	61.02	839.01	06/09/46	59.66	840.37	08/31/46	62.14	837.89	11/21/46	63.21	836.82
03/22/46	60.68	839.35	06/10/46	59.48	840.55	09/01/46	62.09	837.94	11/22/46	63.28	836.75
03/23/46	60.73	839.30	06/11/46	59.51	840.52	09/02/46	61.80	838.23	11/23/46	63.29	836.74
03/24/46	60.70	839.33	06/12/46	59.57	840.46	09/03/46	61.49	838.54	11/24/46	63.28	836.75
03/25/46	60.28	839.75	06/13/46	59.69	840.34	09/04/46	61.35	838.68	11/25/46	63.11	836.92
03/26/46	59.98	840.05	06/14/46	59.99	840.04	09/05/46	61.30	838.73	11/26/46	63.07	836.96
03/27/46	59.92	840.11	06/15/46	59.99	840.04	09/06/46	61.45	838.58	11/27/46	63.07	836.96
03/28/46	59.95	840.08	06/16/46	59.88	840.15	09/07/46	61.47	838.56	11/28/46	63.06	836.97
03/29/46	60.23	839.80	06/17/46	59.59	840.44	09/08/46	61.46	838.57	11/29/46	63.00	837.03
03/30/46	60.33	839.70	06/18/46	59.48	840.55	09/09/46	61.23	838.80	12/06/46	63.07	836.96
03/31/46	60.31	839.72	06/19/46	59.56	840.47	09/10/46	62.03	838.00	12/07/46	63.13	836.90
04/01/46	59.83	840.20	06/20/46	59.63	840.40	09/11/46	60.88	839.15	12/08/46	63.13	836.90
04/02/46	59.35	840.68	06/21/46	60.04	839.99	09/12/46	60.83	839.20	12/09/46	63.01	837.02
04/03/46	59.23	840.80	06/22/46	60.21	839.82	09/13/46	60.88	839.15	12/10/46	63.10	836.93
04/04/46	59.10	840.93	06/23/46	59.20	840.83	09/14/46	60.88	839.15	12/11/46	63.16	836.87
04/05/46	58.99	841.04	06/24/46	60.05	839.98	09/15/46	60.88	839.15	12/12/46	63.20	836.83
04/06/46	59.08	840.95	06/25/46	60.10	839.93	09/16/46	60.77	839.26	12/13/46	63.28	836.75
04/07/46	59.06	840.97	06/26/46	60.13	839.90	09/17/46	60.70	839.33	12/14/46	63.28	836.75
04/08/46	58.62	841.41	06/27/46	60.21	839.82	09/18/46	60.76	839.27	12/15/46	63.26	836.77
04/09/46	58.43	841.60	06/28/46	60.22	839.81	09/19/46	60.76	839.27	12/16/46	63.08	836.95
04/10/46	60.60	839.43	06/29/46	60.22	839.81	09/20/46	60.66	839.37	12/17/46	62.93	837.10
04/11/46	58.78	841.25	06/30/46	60.11	839.92	09/21/46	60.63	839.40	12/18/46	62.85	837.18
04/12/46	59.53	840.50	07/01/46	60.05	839.98	09/22/46	60.61	839.42	12/19/46	62.78	837.25
04/13/46	59.73	840.30	07/02/46	60.08	839.95	09/23/46	60.49	839.54	12/20/46	62.79	837.24
04/14/46	59.72	840.31	07/03/46	60.13	839.90	09/24/46	60.48	839.55	12/21/46	62.82	837.21
04/15/46	59.47	840.56	07/04/46	60.13	839.90	09/25/46	60.51	839.52	12/22/46	62.82	837.21
04/16/46	59.49	840.54	07/05/46	59.86	840.17	09/26/46	60.67	839.36	12/23/46	62.74	837.29
04/17/46	59.57	840.46	07/06/46	59.76	840.27	09/27/46	60.95	839.08	12/24/46	62.63	837.40
04/18/46	59.68	840.35	07/07/46	59.69	840.34	09/28/46	61.05	838.98	12/25/46	62.57	837.46
04/19/46	59.83	840.20	07/09/46	59.56	840.47	09/29/46	61.05	838.98	12/26/46	62.39	837.64
04/20/46	59.88	840.15	07/10/46	59.78	840.25	09/30/46	61.05	838.98	12/27/46	62.31	837.72
04/21/46	59.84	840.19	07/11/46	60.09	839.94	10/01/46	61.13	838.90	12/28/46	62.31	837.72
04/22/46	59.50	840.53	07/12/46	60.45	839.58	10/02/46	61.19	838.84	12/29/46	62.30	837.73
04/23/46	59.23	840.80	07/13/46	60.51	839.52	10/03/46	61.26	838.77	12/30/46	62.16	837.87
04/24/46	59.30	840.73	07/14/46	60.50	839.53	10/04/46	61.38	838.65	12/31/46	62.06	837.97
04/25/46	59.44	840.59	07/15/46	60.50	839.53	10/05/46	61.38	838.65			
04/26/46	59.39	840.64	07/16/46	60.75	839.28	10/06/46	61.36	838.67	01/01/47	62.04	837.99
04/27/46	59.49	840.54	07/17/46	61.16	838.87	10/07/46	61.17	838.86	01/02/47	62.00	838.03
04/28/46	59.46	840.57	07/18/46	61.19	838.84	10/08/46	61.06	838.97	01/03/47	61.96	838.07
04/29/46	59.11	840.92	07/19/46	61.53	838.50	10/09/46	61.06	838.97	01/04/47	62.02	838.01
04/30/46	58.80	841.23	07/20/46	61.70	838.33	10/10/46	61.15	838.88	01/05/47	62.05	837.98
05/01/46	59.18	840.85	07/21/46	61.70	838.33	10/11/46	61.31	838.72	01/06/47	61.95	838.08
05/02/46	59.37	840.66	07/22/46	61.66	838.37	10/12/46	61.33	838.70	01/07/47	61.86	838.17
05/03/46	59.64	840.39	07/23/46	61.52	838.51	10/13/46	61.32	838.71	01/08/47	61.90	838.13
05/04/46	58.75	841.28	07/24/46	61.56	838.47	10/14/46	61.20	838.83	01/09/47	62.05	837.98
05/05/46	59.72	840.31	07/25/46	61.65	838.38	10/15/46	61.46	838.57	01/10/47	62.33	837.70
05/06/46	59.38	840.65	07/26/46	61.93	838.10	10/16/46	61.94	838.09	01/11/47	62.38	837.65
05/07/46	59.23	840.80	07/27/46	61.93	838.10	10/17/46	62.17	837.86	01/12/47	62.38	837.65
05/08/46	59.28	840.75	07/28/46	61.88	838.15	10/18/46	62.48	837.55	01/13/47	62.35	837.68
05/09/46	59.31	840.72	07/29/46	61.61	838.42	10/19/46	62.66	837.37	01/14/47	62.38	837.65
05/10/46	59.59	840.44	07/30/46	61.65	838.38	10/20/46	62.68	837.35	01/15/47	62.21	837.82
05/11/46	59.59	840.44	07/31/46	61.85	838.18	10/21/46	62.78	837.25	01/16/47	62.22	837.81
05/12/46	59.43	840.60	08/01/46	62.08	837.95	10/22/46	63.30	836.73	01/17/47	62.23	837.80
05/13/46	59.07	840.96	08/02/46	62.08	837.95	10/23/46	63.38	836.65	01/18/47	62.24	837.79
05/14/46	58.83	841.20	08/03/46	62.07	837.96	10/24/46	63.40	836.63	01/19/47	62.23	837.80
05/15/46	58.82	841.21	08/04/46	62.05	837.98	10/25/46	63.42	836.61	01/20/47	62.07	837.96
05/16/46	58.92	841.11	08/07/46	62.05	837.98	10/26/46	63.41	836.62	01/21/47	61.92	838.11
05/17/46	59.36	840.67	08/08/46	62.14	837.89	10/27/46	63.30	836.73	01/22/47	61.83	838.20
05/18/46	59.46	840.57	08/09/46	62.30	837.73	10/28/46	63.03	837.00	01/23/47	61.76	838.27
05/19/46	59.44	840.59	08/10/46	62.32	837.71	10/29/46	62.84	837.19	01/24/47	61.68	838.35
05/20/46	59.09	840.94	08/11/46	62.31	837.72	10/30/46	62.79	837.24	01/25/47	61.68	838.35
05/21/46	58.91	841.12	08/12/46	62.18	837.85	10/31/46	62.85	837.18	01/26/47	61.66	838.37
05/22/46	58.93	841.10	08/13/46	62.27	837.76	11/01/46	63.04	836.99	01/27/47	61.55	838.48
05/23/46	58.96	841.07	08/14/46	62.30	837.73	11/02/46	63.05	836.98	01/28/47	61.33	838.70
05/24/46	58.98	841.05	08/15/46	62.30	837.73	11/03/46	63.05	836.98	01/29/47	61.36	838.67
05/25/46	58.98	841.05	08/16/46	62.26	837.77	11/04/46	62.93	837.10	01/30/47	61.40	838.63
05/26/46	58.92	841.11	08/17/46	62.26	837.77	11/05/46	62.89	837.14	01/31/47	61.63	838.40
05/27/46	58.67	841.36	08/18/46	62.18	837.85	11/06/46	62.91	837.12	02/01/47	61.66	838.37
05/28/46	58.66	841.37	08/19/46	61.98	838.05	11/07/46	62.91	837.12	02/02/47	61.66	838.37
05/29/46	58.83	841.20	08/20/46	61.93	838.10	11/08/46	62.99	837.04	02/03/47	61.58	838.45
05/30/46	58.87	841.16	08/21/46	61.98	838.05	11/09/46	63.10	836.93	02/04/47	61.46	838.57
05/31/46	58.97	841.06	08/22/46	62.06	837.97	11/10/46	63.10	836.93	02/05/47	61.41	838.62
06/01/46	58.99	841.04	08/23/46	62.14	837.89	11/11/46	63.00	837.03	02/06/47	61.38	838.65
06/02/46	58.99	841.04	08/24/46	62.18	837.85	11/12/46	62.98	837.05	02/07/47	61.33	838.70
06/03/46	58.91	841.12	08/25/46	62.18	837.85	11/13/46	63.14	836.89	02/08/47	61.30	838.73
06/04/46	59.18	840.85	08/26/46	62.00	838.03	11/14/46	63.24	836.79	02/09/47	61.30	838.73
06/05/46	59.31	840.72	08/27/46	61.92	838.11	11/15/46	63.27	836.76	02/10/47	61.31	838.72

139-049-06ADB (Continued) MP Elev (msl,ft)=900.03

West Fargo North Aquifer SI (ft.)=0-230

Date	Depth to Water (ft)	WL Elev (msl, ft)
02/11/47	61.26	838.77
02/12/47	61.26	838.77
02/13/47	61.28	838.75
02/14/47	61.38	838.65
02/15/47	61.38	838.65
02/16/47	61.38	838.65
02/17/47	61.25	838.78
02/18/47	61.08	838.95
02/19/47	61.08	838.95
02/20/47	61.11	838.92
02/21/47	61.23	838.80
02/22/47	61.23	838.80
02/23/47	61.23	838.80
02/24/47	61.08	838.95
02/25/47	60.95	839.08
02/26/47	60.88	839.15
02/27/47	60.83	839.20
02/28/47	60.83	839.20
03/01/47	60.83	839.20
03/02/47	60.81	839.22
03/03/47	60.66	839.37
03/04/47	60.53	839.50
03/05/47	60.51	839.52
03/06/47	60.55	839.48
03/07/47	60.73	839.30
03/08/47	60.79	839.24
03/09/47	60.79	839.24
03/10/47	60.79	839.24
03/11/47	60.88	839.15
03/12/47	60.91	839.12
03/13/47	60.91	839.12
03/14/47	60.91	839.12
03/15/47	60.91	839.12
03/16/47	60.87	839.16
03/17/47	60.70	839.33
03/18/47	60.60	839.43
03/19/47	60.56	839.47
03/20/47	60.56	839.47
03/21/47	60.60	839.43
03/22/47	60.60	839.43
03/23/47	60.53	839.50
03/24/47	60.35	839.68
03/25/47	60.78	839.25
03/26/47	61.11	838.92
03/27/47	61.51	838.52
03/28/47	61.79	838.24
04/04/47	61.00	839.03
04/05/47	60.95	839.08
04/06/47	60.68	839.35
04/07/47	60.13	839.90
04/08/47	59.86	840.17
04/09/47	59.76	840.27
04/10/47	59.71	840.32
04/11/47	59.73	840.30
04/12/47	59.73	840.30
04/13/47	59.73	840.30
04/18/47	58.90	841.13
04/19/47	58.73	841.30
04/20/47	58.54	841.49
04/21/47	58.32	841.71
04/22/47	58.24	841.79
04/23/47	58.23	841.80
04/24/47	58.39	841.64
04/25/47	58.63	841.40
04/26/47	58.71	841.32
04/27/47	58.71	841.32
04/28/47	58.72	841.31
04/29/47	58.76	841.27
04/30/47	58.83	841.20
05/01/47	58.91	841.12
05/02/47	59.01	841.02
05/16/47	59.28	840.75
05/17/47	59.29	840.74
05/18/47	59.29	840.74
05/19/47	59.25	840.78
05/20/47	59.27	840.76
05/21/47	59.30	840.73
05/22/47	59.33	840.70
05/23/47	59.43	840.60
08/20/47	65.03	835.00
08/21/47	65.23	834.80
08/22/47	65.06	834.97
08/23/47	65.11	834.92
08/24/47	65.15	834.88
08/25/47	65.14	834.89
08/26/47	65.16	834.87
08/27/47	65.14	834.89
08/28/47	65.14	834.89
08/29/47	65.15	834.88
08/30/47	65.17	834.86
08/31/47	65.17	834.86
09/01/47	65.17	834.86
09/02/47	65.15	834.88
09/03/47	65.13	834.90
09/15/47	65.24	834.79
09/16/47	65.24	834.79
09/17/47	65.26	834.77
09/18/47	65.28	834.75
09/19/47	65.40	834.63
09/20/47	65.47	834.56
09/21/47	65.48	834.55
09/22/47	65.48	834.55
09/26/47	67.94	832.09
09/27/47	67.93	832.10
09/28/47	67.92	832.11
09/29/47	67.93	832.10
09/30/47	67.94	832.09
10/01/47	67.99	832.04
10/02/47	68.01	832.02
10/03/47	67.97	832.06
05/08/48	67.88	832.15
05/09/48	67.90	832.13
05/10/48	67.76	832.27
05/11/48	67.77	832.26
05/12/48	67.74	832.29
05/13/48	67.78	832.25
05/14/48	67.78	832.25
05/15/48	67.78	832.25
05/28/48	68.35	831.68
05/29/48	68.37	831.66
05/30/48	68.39	831.64
05/31/48	68.55	831.48
06/01/48	68.64	831.39
06/02/48	68.85	831.18
06/03/48	69.21	830.82
06/04/48	69.39	830.64
06/05/48	70.79	829.24
06/09/48	71.27	828.76
06/10/48	71.33	828.70
06/11/48	71.33	828.70
06/12/48	71.33	828.70
06/13/48	71.39	828.64
06/14/48	71.47	828.56
06/15/48	71.50	828.53
06/16/48	71.55	828.48
06/25/48	71.63	828.40
06/26/48	71.63	828.40
06/27/48	71.62	828.41
06/28/48	71.61	828.42
06/29/48	71.57	828.46
06/30/48	71.57	828.46
07/01/48	71.57	828.46
07/02/48	71.58	828.45
08/29/48	72.85	827.18
08/30/48	72.89	827.14
08/31/48	72.95	827.08
09/01/48	73.01	827.02
09/02/48	73.07	826.96
09/03/48	73.15	826.88
09/04/48	73.26	826.77
09/05/48	73.26	826.77
09/06/48	73.23	826.80
09/07/48	73.20	826.83
09/08/48	73.14	826.89
09/09/48	73.13	826.90
09/10/48	73.12	826.91
09/11/48	73.10	826.93
09/12/48	72.81	827.22
09/13/48	72.75	827.28
09/14/48	72.73	827.30
09/15/48	72.73	827.30
09/16/48	72.72	827.31
09/17/48	72.70	827.33
09/18/48	72.70	827.33
09/19/48	72.49	827.54
09/20/48	72.46	827.57
09/21/48	72.46	827.57
09/22/48	72.44	827.59
09/23/48	72.44	827.59
09/24/48	72.46	827.57
09/25/48	72.46	827.57
09/26/48	72.43	827.60
09/27/48	72.43	827.60
09/28/48	72.45	827.58
09/29/48	72.47	827.56
09/30/48	72.50	827.53
10/01/48	72.52	827.51
10/02/48	72.53	827.50
10/03/48	73.23	826.80
10/04/48	73.13	826.90
10/05/48	73.10	826.93
10/06/48	73.08	826.95
10/07/48	73.11	826.92
10/08/48	73.13	826.90
10/09/48	72.61	827.42
10/10/48	72.59	827.44
10/11/48	72.64	827.39
10/12/48	72.75	827.28
10/13/48	72.83	827.20
10/14/48	72.91	827.12
10/15/48	72.95	827.08
10/16/48	72.74	827.29
10/17/48	72.73	827.30
10/18/48	72.69	827.34
10/19/48	72.67	827.36
10/20/48	72.71	827.32
10/21/48	72.77	827.26
10/22/48	72.80	827.23
10/23/48	72.84	827.19
10/24/48	72.80	827.23
10/25/48	72.77	827.26
10/26/48	72.77	827.26
10/27/48	72.80	827.23
10/28/48	72.88	827.15
10/29/48	72.98	827.05
10/30/48	72.93	827.10
10/31/48	72.93	827.10
11/01/48	72.93	827.10
11/02/48	72.92	827.11
11/03/48	72.92	827.11
11/04/48	72.93	827.10
11/05/48	72.94	827.09
11/06/48	72.93	827.10
11/07/48	72.93	827.10
11/08/48	72.93	827.10
11/09/48	72.94	827.09
11/10/48	72.99	827.04
11/11/48	73.01	827.02
11/12/48	73.05	826.98
11/13/48	73.05	826.98
11/14/48	73.03	827.00
11/15/48	73.03	827.00
11/16/48	73.05	826.98
11/17/48	73.07	826.96
11/18/48	73.11	826.92
11/19/48	73.13	826.90
11/20/48	72.51	827.52
11/21/48	72.51	827.52
11/22/48	72.45	827.58
11/23/48	72.42	827.61
11/24/48	72.41	827.62
11/25/48	72.39	827.64
11/26/48	72.31	827.72
11/27/48	72.24	827.79
12/04/48	72.53	827.50
12/05/48	72.52	827.51
12/06/48	72.52	827.51
12/07/48	72.50	827.53
12/08/48	72.50	827.53
12/09/48	72.50	827.53
12/10/48	72.53	827.50
12/11/48	72.53	827.50
12/12/48	72.54	827.49
12/13/48	72.55	827.48
12/14/48	72.57	827.46
12/15/48	72.58	827.45
12/16/48	72.59	827.44
12/17/48	72.53	827.50
12/18/48	72.23	827.80
12/19/48	72.23	827.80
12/20/48	72.23	827.80
12/21/48	72.24	827.79
12/22/48	72.25	827.78
12/23/48	72.25	827.78
12/24/48	72.27	827.76
12/25/48	72.27	827.76
12/26/48	72.27	827.76
12/27/48	72.26	827.77
12/28/48	72.26	827.77
12/29/48	72.27	827.76
12/30/48	72.27	827.76
12/31/48	72.27	827.76
01/07/49	72.09	827.94
01/08/49	72.11	827.92
01/09/49	72.11	827.92
01/10/49	72.12	827.91
01/11/49	72.18	827.85
01/12/49	72.21	827.82
01/13/49	72.23	827.80
01/14/49	72.23	827.80
01/15/49	72.30	827.73
01/16/49	72.30	827.73
01/17/49	72.25	827.78
01/18/49	72.22	827.81
01/19/49	72.17	827.86
01/20/49	72.16	827.87
01/21/49	72.15	827.88
01/22/49	72.27	827.76
01/23/49	72.26	827.77
01/24/49	72.21	827.82
01/25/49	72.17	827.86
01/26/49	72.16	827.87
01/27/49	72.12	827.91
01/28/49	72.12	827.91
01/29/49	72.24	827.79
01/30/49	72.24	827.79
01/31/49	72.17	827.86
02/01/49	72.04	827.99
02/02/49	72.03	828.00
02/03/49	72.04	827.99
02/05/49	72.23	827.80
02/06/49	72.24	827.79
02/07/49	72.23	827.80
02/08/49	72.27	827.76
02/09/49	72.33	827.70
02/10/49	72.39	827.64
02/11/49	72.44	827.59
02/12/49	72.12	827.91
02/13/49	72.13	827.90
02/14/49	72.34	827.69
02/15/49	72.34	827.69
02/16/49	72.38	827.65
02/17/49	72.40	827.63
02/18/49	72.47	827.56
02/19/49	73.28	826.75
02/20/49	73.36	826.67
02/21/49	73.41	826.62
02/22/49	73.47	826.56
02/23/49	73.47	826.56
02/24/49	73.55	826.48
02/25/49	73.63	826.40
02/26/49	73.65	826.38
02/27/49	73.67	826.36
02/28/49	73.72	826.31
03/01/49	75.75	824.28
03/02/49	73.78	826.25
03/03/49	75.85	824.18
03/04/49	73.89	826.14

139-049-06ADB (Continued) MP Elev (msl,ft)=900.03

West Fargo North Aquifer SI (ft.)=0-230

Date	Depth to Water (ft)	WL Elev (msl, ft)	Date	Depth to Water (ft)	WL Elev (msl, ft)	Date	Depth to Water (ft)	WL Elev (msl, ft)	Date	Depth to Water (ft)	WL Elev (msl, ft)
03/05/49	73.23	826.80	06/17/49	66.99	833.04	09/08/49	70.72	829.31	12/03/49	72.18	827.85
03/06/49	73.25	826.78	06/18/49	67.02	833.01	09/09/49	70.78	829.25	12/04/49	71.77	828.26
03/07/49	73.26	826.77	06/19/49	67.02	833.01	09/10/49	70.80	829.23	12/05/49	71.72	828.31
03/08/49	73.28	826.75	06/20/49	66.99	833.04	09/11/49	70.79	829.24	12/06/49	71.70	828.33
03/09/49	73.31	826.72	06/21/49	67.03	833.00	09/12/49	70.81	829.22	12/07/49	71.58	828.45
03/10/49	73.33	826.70	06/22/49	67.09	832.94	09/13/49	70.76	829.27	12/08/49	71.58	828.45
03/11/49	73.35	826.68	06/23/49	67.14	832.89	09/14/49	70.93	829.10	12/09/49	71.58	828.45
03/12/49	73.35	826.68	06/24/49	67.19	832.84	09/15/49	70.98	829.05	12/10/49	71.67	828.36
03/13/49	73.23	826.80	06/25/49	67.21	832.82	09/16/49	71.05	828.98	12/11/49	71.60	828.43
03/14/49	73.24	826.79	06/26/49	67.21	832.82	09/17/49	71.08	828.95	12/12/49	71.56	828.47
03/15/49	73.23	826.80	06/27/49	67.22	832.81	09/18/49	71.11	828.92	12/13/49	71.54	828.49
03/16/49	73.22	826.81	06/28/49	67.07	832.96	09/19/49	71.18	828.85	12/14/49	71.52	828.51
03/17/49	73.21	826.82	06/29/49	67.34	832.69	09/20/49	71.25	828.78	12/17/49	71.34	828.69
03/18/49	73.22	826.81	06/30/49	67.42	832.61	09/21/49	71.34	828.69	12/18/49	71.33	828.70
03/26/49	73.08	826.95	07/01/49	67.19	832.84	09/22/49	71.45	828.58	12/19/49	71.32	828.71
03/27/49	72.95	827.08	07/02/49	67.22	832.81	09/23/49	71.63	828.40	12/20/49	71.31	828.72
03/28/49	72.63	827.40	07/03/49	67.23	832.80	09/24/49	71.67	828.36	12/21/49	71.31	828.72
03/29/49	72.41	827.62	07/04/49	67.23	832.80	09/25/49	71.71	828.32	12/22/49	71.30	828.73
03/30/49	72.25	827.78	07/05/49	67.23	832.80	09/26/49	71.76	828.27	12/23/49	71.29	828.74
03/31/49	72.23	827.80	07/06/49	67.30	832.73	09/27/49	71.83	828.20	12/24/49	71.29	828.74
04/01/49	72.23	827.80	07/07/49	68.53	831.50	09/28/49	71.90	828.13	12/31/49	69.61	830.42
04/02/49	72.63	827.40	07/08/49	69.53	830.50	09/29/49	72.03	828.00			
04/03/49	72.73	827.30	07/09/49	69.61	830.42	09/30/49	72.12	827.91	01/01/50	69.59	830.44
04/04/49	72.51	827.52	07/10/49	69.61	830.42	10/01/49	72.12	827.91	01/02/50	69.58	830.45
04/05/49	72.26	827.77	07/11/49	69.68	830.35	10/02/49	72.13	827.90	01/03/50	69.58	830.45
04/06/49	72.13	827.90	07/12/49	69.78	830.25	10/03/49	72.17	827.86	01/04/50	69.58	830.45
04/07/49	71.98	828.05	07/13/49	69.80	830.23	10/04/49	72.25	827.78	01/05/50	69.57	830.46
04/08/49	71.98	828.05	07/15/49	70.06	829.97	10/05/49	72.31	827.72	01/06/50	69.57	830.46
04/09/49	71.96	828.07	07/16/49	70.10	829.93	10/06/49	72.37	827.66	01/07/50	69.56	830.47
04/10/49	71.93	828.10	07/17/49	70.11	829.92	10/07/49	72.42	827.61	01/12/50	69.09	830.94
04/11/49	70.61	829.42	07/18/49	70.15	829.88	10/08/49	72.47	827.56	01/13/50	69.05	830.98
04/12/49	70.61	829.42	07/19/49	70.43	829.60	10/09/49	72.50	827.53	01/14/50	69.11	830.92
04/13/49	71.30	828.73	07/22/49	68.86	831.17	10/10/49	72.50	827.53	01/15/50	69.11	830.92
04/14/49	71.16	828.87	07/23/49	68.90	831.13	10/11/49	72.52	827.51	01/16/50	69.10	830.93
04/15/49	71.08	828.95	07/24/49	68.92	831.11	10/12/49	72.59	827.44	01/17/50	69.09	830.94
04/16/49	71.01	829.02	07/25/49	68.97	831.06	10/13/49	72.67	827.36	01/21/50	69.09	830.94
04/17/49	70.21	829.82	07/26/49	69.04	830.99	10/14/49	72.75	827.28	03/03/50	70.08	829.95
04/18/49	69.93	830.10	07/27/49	69.12	830.91	10/15/49	72.78	827.25	03/04/50	70.17	829.86
04/19/49	69.65	830.38	07/28/49	69.18	830.85	10/16/49	72.79	827.24	03/05/50	70.03	830.00
04/20/49	69.51	830.52	07/29/49	69.15	830.88	10/17/49	72.84	827.19	03/06/50	70.03	830.00
04/21/49	69.40	830.63	07/30/49	69.17	830.86	10/18/49	72.89	827.14	03/07/50	69.93	830.10
04/23/49	70.04	829.99	07/31/49	69.18	830.85	10/19/49	72.87	827.16	03/08/50	69.80	830.23
04/29/49	68.53	831.50	08/01/49	69.11	830.92	10/20/49	73.04	826.99	03/09/50	69.63	830.40
05/06/49	68.38	831.65	08/02/49	69.25	830.78	10/21/49	73.09	826.94	03/10/50	69.37	830.66
05/07/49	68.32	831.71	08/03/49	69.41	830.62	10/22/49	73.14	826.89	03/17/50	70.23	829.80
05/08/49	68.32	831.71	08/04/49	69.48	830.55	10/23/49	73.18	826.85	03/18/50	70.27	829.76
05/09/49	68.31	831.72	08/05/49	69.38	830.65	10/24/49	73.24	826.79	03/19/50	70.29	829.74
05/10/49	68.30	831.73	08/06/49	69.44	830.59	10/25/49	73.29	826.74	03/20/50	70.31	829.72
05/11/49	68.30	831.73	08/07/49	69.44	830.59	10/26/49	73.34	826.69	03/21/50	70.33	829.70
05/13/49	68.34	831.69	08/08/49	69.48	830.55	10/27/49	73.40	826.63	03/22/50	70.37	829.66
05/14/49	68.34	831.69	08/09/49	69.53	830.50	10/28/49	73.41	826.62	03/23/50	70.37	829.66
05/15/49	68.31	831.72	08/10/49	69.75	830.28	10/29/49	73.44	826.59	03/24/50	70.43	829.60
05/16/49	68.28	831.75	08/11/49	69.83	830.20	10/30/49	73.45	826.58	03/25/50	70.43	829.60
05/17/49	68.25	831.78	08/12/49	69.92	830.11	10/31/49	73.46	826.57	03/26/50	70.43	829.60
05/18/49	68.23	831.80	08/13/49	69.98	830.05	11/01/49	73.46	826.57	03/27/50	70.41	829.62
05/19/49	68.21	831.82	08/14/49	70.01	830.02	11/02/49	73.47	826.56	03/28/50	70.39	829.64
05/20/49	68.23	831.80	08/15/49	70.08	829.95	11/03/49	73.48	826.55	03/29/50	70.41	829.62
05/21/49	67.23	832.80	08/16/49	70.10	829.93	11/04/49	73.51	826.52	03/30/50	70.43	829.60
05/22/49	66.90	833.13	08/17/49	70.16	829.87	11/05/49	73.51	826.52	03/31/50	70.45	829.58
05/23/49	66.86	833.17	08/18/49	70.25	829.78	11/06/49	73.50	826.53	04/01/50	68.73	831.30
05/24/49	66.82	833.21	08/19/49	70.29	829.74	11/07/49	73.46	826.57	04/02/50	68.94	831.09
05/25/49	66.80	833.23	08/20/49	70.30	829.73	11/08/49	73.44	826.59	04/03/50	68.91	831.12
05/26/49	66.79	833.24	08/21/49	70.30	829.73	11/09/49	73.43	826.60	04/04/50	68.89	831.14
05/27/49	66.79	833.24	08/22/49	70.32	829.71	11/10/49	73.41	826.62	04/05/50	68.86	831.17
05/28/49	66.78	833.25	08/23/49	70.33	829.70	11/11/49	73.39	826.64	04/06/50	68.86	831.17
05/29/49	66.75	833.28	08/24/49	70.38	829.65	11/12/49	73.39	826.64	04/07/50	68.86	831.17
05/30/49	66.55	833.48	08/25/49	70.41	829.62	11/13/49	73.38	826.65	04/08/50	69.21	830.82
05/31/49	66.24	833.79	08/26/49	70.46	829.57	11/14/49	73.34	826.69	04/09/50	69.23	830.80
06/01/49	66.30	833.73	08/27/49	70.47	829.56	11/15/49	73.26	826.77	04/10/50	69.21	830.82
06/02/49	66.30	833.73	08/28/49	70.47	829.56	11/16/49	73.19	826.84	04/11/50	69.19	830.84
06/03/49	66.70	833.33	08/29/49	70.46	829.57	11/17/49	73.13	826.90	04/12/50	69.17	830.86
06/04/49	66.71	833.32	08/30/49	70.47	829.56	11/18/49	73.13	826.90	04/13/50	69.19	830.84
06/05/49	66.70	833.33	08/31/49	70.48	829.55	11/19/49	73.08	826.95	04/14/50	69.08	830.95
06/06/49	66.67	833.36	09/01/49	70.52	829.51	11/26/49	72.31	827.72	04/15/50	69.27	830.76
06/07/49	66.70	833.33	09/02/49	70.63	829.40	11/27/49	72.23	827.80	04/16/50	69.29	830.74
06/08/49	66.74	833.29	09/03/49	70.64	829.39	11/28/49	72.18	827.85	04/17/50	69.29	830.74
06/09/49	66.79	833.24	09/04/49	70.64	829.39	11/29/49	72.01	828.02	04/18/50	69.30	830.73
06/10/49	66.79	833.24	09/05/49	70.62	829.41	11/30/49	71.99	828.04	04/19/50	69.31	830.72
06/11/49	66.73	833.30	09/06/49	70.64	829.39	12/01/49	71.96	828.07	04/20/50	69.41	830.62
06/12/49	66.73	833.30	09/07/49	70.64	829.39	12/02/49	71.95	828.08	04/21/50	69.38	830.65

139-049-06ADB (Continued) MP Elev (msl,ft)=900.03

West Fargo North Aquifer SI (ft.)=0-230

Date	Depth to Water (ft)	WL Elev (msl, ft)
04/22/50	69.41	830.62
04/23/50	70.15	829.88
04/24/50	70.07	829.96
04/25/50	70.18	829.85
04/26/50	70.19	829.84
04/27/50	70.20	829.83
04/28/50	70.22	829.81
04/29/50	68.25	831.78
04/30/50	69.19	830.84
05/01/50	69.18	830.85
05/02/50	69.06	830.97
05/03/50	69.05	830.98
05/04/50	69.11	830.92
05/12/50	67.98	832.05
05/13/50	67.93	832.10
05/14/50	67.72	832.31
05/15/50	67.60	832.43
05/16/50	67.40	832.63
05/17/50	67.28	832.75
05/18/50	67.18	832.85
05/19/50	67.43	832.60
05/20/50	67.02	833.01
05/21/50	66.93	833.10
05/22/50	66.83	833.20
05/23/50	66.76	833.27
05/24/50	66.66	833.37
05/25/50	66.60	833.43
05/26/50	66.55	833.48
05/27/50	66.51	833.52
05/28/50	66.45	833.58
05/29/50	66.23	833.80
05/30/50	66.11	833.92
05/31/50	66.08	833.95
06/01/50	65.98	834.05
06/02/50	65.91	834.12
06/03/50	65.87	834.16
06/04/50	65.65	834.38
06/10/50	65.65	834.38
06/16/50	65.83	834.20
06/23/50	66.61	833.42
06/30/50	67.13	832.90
07/05/50	67.33	832.70
07/14/50	68.03	832.00
07/22/50	75.90	824.13
08/04/50	76.42	823.61
08/11/50	76.58	823.45
08/19/50	76.91	823.12
08/25/50	70.37	829.66
09/02/50	71.18	828.85
09/09/50	71.07	828.96
09/16/50	71.13	828.90
01/06/51	67.10	832.93
01/13/51	66.79	833.24
01/19/51	66.80	833.23
02/02/51	65.90	834.13
02/09/51	65.70	834.33
02/16/51	65.46	834.57
02/23/51	65.44	834.59
03/04/51	65.94	834.09
03/09/51	65.60	834.43
03/17/51	65.64	834.39
03/24/51	65.60	834.43
03/31/51	65.65	834.38
04/06/51	65.83	834.20
04/13/51	66.01	834.02
04/21/51	66.15	833.88
04/27/51	66.23	833.80
05/04/51	66.07	833.96
05/11/51	65.86	834.17
05/18/51	65.60	834.43
05/26/51	65.75	834.28
06/01/51	65.80	834.23
06/08/51	65.94	834.09
06/16/51	66.00	834.03
06/22/51	65.24	834.79
06/29/51	65.47	834.56
07/06/51	65.50	834.53
07/13/51	66.31	833.72
07/20/51	66.60	833.43
07/27/51	66.84	833.19
08/03/51	67.02	833.01
08/10/51	67.10	832.93
08/17/51	67.09	832.94
08/24/51	66.98	833.05
08/31/51	67.70	832.33
09/08/51	66.84	833.19
09/14/51	66.50	833.53
09/21/51	66.43	833.60
09/28/51	67.51	832.52
10/05/51	66.75	833.28
10/12/51	66.94	833.09
10/19/51	67.04	832.99
10/26/51	67.28	832.75
11/02/51	67.48	832.55
11/09/51	67.73	832.30
11/16/51	67.90	832.13
11/23/51	68.05	831.98
11/30/51	68.34	831.69
12/07/51	67.73	832.30
12/14/51	68.35	831.68
12/21/51	69.11	830.92
12/28/51	67.50	832.53
01/04/52	66.82	833.21
01/11/52	66.74	833.29
01/18/52	66.62	833.41
01/25/52	64.39	835.64
02/02/52	66.21	833.82
02/08/52	66.24	833.79
02/16/52	65.93	834.10
02/23/52	65.75	834.28
02/28/52	64.96	835.07
03/07/52	65.34	834.69
03/14/52	65.27	834.76
03/22/52	65.27	834.76
03/29/52	65.16	834.87
04/05/52	65.10	834.93
04/12/52	65.01	835.02
04/22/52	64.94	835.09
04/26/52	65.10	834.93
05/03/52	65.47	834.56
05/09/52	65.23	834.80
05/16/52	66.83	833.20
05/23/52	65.21	834.82
05/31/52	65.12	834.91
06/06/52	68.72	831.31
06/14/52	65.09	834.94
06/21/52	65.44	834.59
06/28/52	65.47	834.56
07/05/52	65.41	834.62
07/11/52	64.56	835.47
07/18/52	64.14	835.89
08/01/52	64.20	835.83
08/09/52	64.04	835.99
08/15/52	67.39	832.64
08/23/52	64.02	836.01
08/30/52	64.18	835.85
09/06/52	64.30	835.73
09/13/52	65.24	834.79
09/20/52	64.60	835.43
09/26/52	64.68	835.35
10/10/52	64.94	835.09
10/17/52	65.08	834.95
10/24/52	65.17	834.86
10/31/52	68.03	832.00
11/08/52	64.07	835.96
11/14/52	68.08	831.95
11/22/52	63.31	836.72
11/29/52	65.15	834.88
12/06/52	64.96	835.07
12/13/52	64.88	835.15
12/21/52	64.93	835.10
12/27/52	64.92	835.11
01/03/53	64.72	835.31
01/10/53	64.72	835.31
01/17/53	64.85	835.18
01/24/53	65.06	834.97
01/31/53	65.21	834.82
02/07/53	65.22	834.81
02/14/53	65.33	834.70
02/21/53	65.41	834.62
02/28/53	65.46	834.57
03/07/53	65.55	834.48
03/14/53	65.52	834.51
03/21/53	65.40	834.63
03/28/53	65.93	834.10
04/04/53	64.28	835.75
04/11/53	63.56	836.47
04/18/53	63.03	837.00
04/25/53	62.65	837.38
05/02/53	62.06	837.97
05/09/53	61.80	838.23
05/23/53	61.76	838.27
05/30/53	62.05	837.98
06/07/53	61.61	838.42
06/13/53	63.13	836.90
06/20/53	63.54	836.49
06/28/53	64.34	835.69
07/05/53	65.12	834.91
07/12/53	65.44	834.59
07/20/53	66.02	834.01
07/26/53	66.55	833.48
08/03/53	66.86	833.17
08/09/53	67.51	832.52
08/16/53	67.77	832.26
08/23/53	68.06	831.97
08/30/53	68.32	831.71
09/06/53	68.34	831.69
09/12/53	68.53	831.50
09/19/53	68.69	831.34
09/27/53	68.75	831.28
10/04/53	68.78	831.25
10/11/53	68.99	831.04
10/18/53	69.15	830.88
10/25/53	69.38	830.65
11/02/53	69.53	830.50
11/07/53	69.64	830.39
11/14/53	69.85	830.18
11/21/53	69.89	830.14
11/28/53	69.90	830.13
12/06/53	69.96	830.07
12/12/53	70.19	829.84
12/20/53	70.27	829.76
12/27/53	70.46	829.57
01/03/54	70.30	829.73
01/10/54	70.28	829.75
01/17/54	70.22	829.81
01/24/54	70.71	829.32
02/01/54	70.78	829.25
02/07/54	70.86	829.17
02/15/54	71.03	829.00
02/21/54	71.23	828.80
03/01/54	71.29	828.74
03/07/54	71.29	828.74
03/14/54	71.32	828.71
03/21/54	71.64	828.39
04/01/54	71.06	828.97
04/04/54	70.46	829.57
04/11/54	71.29	828.74
04/18/54	69.84	830.19
04/25/54	69.50	830.53
05/01/54	69.14	830.89
05/09/54	68.71	831.32
05/17/54	68.51	831.52
05/24/54	68.52	831.51
05/31/54	68.47	831.56
06/06/54	68.39	831.64
06/14/54	68.42	831.61
06/21/54	68.46	831.57
06/28/54	68.42	831.61
07/06/54	68.70	831.33
07/12/54	68.89	831.14
07/19/54	69.38	830.65
07/26/54	69.81	830.22
08/01/54	70.09	829.94
08/08/54	70.45	829.58
08/15/54	70.98	829.05
08/22/54	71.90	828.13
08/30/54	72.35	827.68
09/05/54	72.41	827.62
09/12/54	72.57	827.46
09/20/54	72.76	827.27
09/26/54	73.07	826.96
10/03/54	73.41	826.62
10/10/54	73.62	826.41
10/17/54	73.62	826.41
10/24/54	74.31	825.72
10/31/54	74.65	825.38
11/08/54	75.09	824.94
11/14/54	75.45	824.58
11/21/54	75.67	824.36
11/28/54	75.70	824.33
12/05/54	75.78	824.25
12/12/54	75.86	824.17
12/20/54	75.86	824.17
12/26/54	75.67	824.36
01/02/55	75.56	824.47
01/09/55	75.34	824.69
01/16/55	75.29	824.74
01/23/55	75.26	824.77
01/30/55	75.53	824.50
02/06/55	75.83	824.20
02/13/55	75.92	824.11
02/21/55	75.78	824.25
02/27/55	75.72	824.31
03/06/55	75.62	824.41
03/13/55	75.52	824.51
03/21/55	75.61	824.42
03/27/55	75.62	824.41
04/03/55	75.70	824.33
04/10/55	75.72	824.31
04/17/55	75.74	824.29
04/24/55	75.68	824.35
05/01/55	75.60	824.43
05/08/55	75.50	824.53
05/16/55	75.37	824.66
05/21/55	75.20	824.83
06/05/55	78.09	821.94
07/02/55	75.92	824.11
08/28/55	77.05	822.98
09/05/55	76.14	823.89
09/11/55	78.45	821.58
09/19/55	80.07	819.96
09/26/55	81.06	818.97
10/02/55	79.82	820.21
10/09/55	79.83	820.20
10/17/55	79.89	820.14
10/22/55	79.65	820.38
10/28/55	79.32	820.71
11/05/55	78.78	821.25
11/15/55	78.64	821.39
11/22/55	78.61	821.42
11/28/55	78.57	821.46
12/05/55	79.30	820.73
12/18/55	79.76	820.27
12/28/55	79.58	820.45
01/03/56	80.04	819.99
01/10/56	80.85	819.18
01/16/56	81.32	818.71
01/24/56	81.65	818.38
01/31/56	82.10	817.93
02/07/56	82.52	817.51
02/14/56	81.87	818.16
02/21/56	81.54	818.49
02/28/56	81.30	818.73
03/06/56	81.32	818.71
03/13/56	81.80	818.23
03/21/56	82.34	817.69
03/27/56	82.75	817.28
04/03/56	83.45	816.58
04/10/56	83.79	816.24
04/13/56	84.10	815.93
04/24/56	84.29	815.74
05/01/56	84.38	815.65
05/08/56	83.79	816.24

139-049-06ADB **(Continued)** MP Elev (msl,ft)=900.03

West Fargo North Aquifer SI (ft.)=0-230

Date	Depth to Water (ft)	WL Elev (msl, ft)
05/15/56	83.19	816.84
05/22/56	82.85	817.18
05/29/56	82.35	817.68
06/05/56	81.74	818.29
06/12/56	81.53	818.50
06/19/56	81.65	818.38
06/26/56	81.70	818.33
07/03/56	81.75	818.28
07/11/56	81.80	818.23
07/18/56	82.34	817.69
07/24/56	82.50	817.53
07/31/56	82.66	817.37
08/08/56	82.84	817.19
08/14/56	82.90	817.13
08/22/56	83.06	816.97
08/28/56	83.15	816.88
09/05/56	83.26	816.77
09/11/56	83.47	816.56
09/18/56	83.65	816.38
09/25/56	83.75	816.28
10/03/56	83.87	816.16
10/10/56	84.06	815.97
10/17/56	84.14	815.89
10/26/56	84.25	815.78
10/31/56	84.27	815.76
11/07/56	84.28	815.75
11/14/56	84.28	815.75
11/21/56	84.25	815.78
11/28/56	84.26	815.77
12/05/56	83.97	816.06
12/12/56	83.78	816.25
12/19/56	83.66	816.37
12/26/56	83.25	816.78
01/03/57	82.60	817.43
01/09/57	82.54	817.49
01/16/57	82.40	817.63
01/23/57	82.41	817.62
01/30/57	82.62	817.41
02/06/57	82.72	817.31
02/13/57	82.94	817.09
02/22/57	83.42	816.61
02/28/57	83.51	816.52
03/07/57	83.57	816.46
03/14/57	83.62	816.41
03/21/57	83.71	816.32
03/28/57	84.84	815.19
04/04/57	83.81	816.22
04/13/57	83.13	816.90
04/22/57	81.64	818.39
04/30/57	80.80	819.23
05/07/57	80.56	819.47
05/14/57	80.26	819.77
05/22/57	80.01	820.02
05/31/57	79.63	820.40
06/06/57	79.55	820.48
06/16/57	79.55	820.48
06/23/57	79.45	820.58
07/01/57	79.30	820.73
07/16/57	79.40	820.63
07/23/57	79.71	820.32
07/27/57	80.32	819.71
07/31/57	80.12	819.91
08/13/57	80.39	819.64
08/20/57	80.48	819.55
08/27/57	80.92	819.11
09/03/57	80.92	819.11
09/10/57	80.88	819.15
09/17/57	80.82	819.21
09/23/57	80.83	819.20
09/30/57	80.47	819.56
10/08/57	80.55	819.48
10/14/57	80.97	819.06
10/21/57	81.06	818.97
10/28/57	81.13	818.90
11/04/57	81.21	818.82
11/18/57	81.24	818.79
11/24/57	81.26	818.77
12/01/57	81.13	818.90
12/08/57	81.08	818.95
12/15/57	80.91	819.12
12/22/57	80.59	819.44
12/29/57	80.38	819.65
01/05/58	80.22	819.81
01/12/58	81.00	819.03
01/19/58	79.82	820.21
01/26/58	79.47	820.56
02/02/58	79.20	820.83
02/09/58	79.04	820.99
02/16/58	79.05	820.98
02/23/58	78.97	821.06
03/03/58	78.83	821.20
03/10/58	78.63	821.40
03/16/58	78.59	821.44
03/23/58	78.54	821.49
03/30/58	78.56	821.47
04/07/58	78.58	821.45
04/13/58	78.58	821.45
04/20/58	77.64	822.39
04/27/58	78.72	821.31
05/04/58	78.70	821.33
05/10/58	78.63	821.40
05/18/58	78.60	821.43
05/24/58	78.60	821.43
06/02/58	78.64	821.39
06/08/58	78.74	821.29
06/15/58	78.83	821.20
06/22/58	78.84	821.19
06/29/58	78.97	821.06
07/07/58	79.15	820.88
07/13/58	79.34	820.69
07/21/58	79.80	820.23
07/27/58	80.16	819.87
08/02/58	85.70	814.33
08/11/58	81.06	818.97
08/17/58	81.30	818.73
08/24/58	81.68	818.35
09/01/58	81.84	818.19
09/08/58	81.95	818.08
09/14/58	82.08	817.95
09/21/58	82.24	817.79
09/28/58	82.40	817.63
10/05/58	82.93	817.10
10/12/58	83.55	816.48
10/21/58	83.55	816.48
10/26/58	83.73	816.30
11/04/58	83.91	816.12
11/09/58	83.92	816.11
11/16/58	83.90	816.13
11/23/58	83.65	816.38
11/30/58	83.70	816.33
12/07/58	83.98	816.05
12/14/58	84.75	815.28
12/21/58	86.36	813.67
12/28/58	85.48	814.55
01/04/59	85.44	814.59
01/11/59	85.52	814.51
01/18/59	85.63	814.40
01/25/59	85.76	814.27
02/01/59	85.94	814.09
02/08/59	86.18	813.85
02/15/59	86.32	813.71
02/22/59	86.45	813.58
03/03/59	86.66	813.37
03/08/59	86.72	813.31
03/15/59	86.67	813.36
03/23/59	86.28	813.75
03/30/59	85.82	814.21
04/05/59	85.37	814.66
04/12/59	85.10	814.93
04/19/59	84.88	815.15
04/26/59	84.75	815.28
05/03/59	84.56	815.47
05/11/59	84.47	815.56
05/19/59	84.35	815.68
05/25/59	84.28	815.75
06/01/59	84.18	815.85
06/08/59	84.13	815.90
06/15/59	84.18	815.85
06/22/59	84.36	815.67
06/29/59	84.52	815.51
07/06/59	84.69	815.34
07/13/59	84.87	815.16
07/20/59	85.03	815.00
07/27/59	85.23	814.80
08/04/59	85.60	814.43
08/11/59	86.30	813.73
08/17/59	86.20	813.83
08/24/59	85.96	814.07
09/01/59	87.51	812.52
09/09/59	88.84	811.19
09/16/59	89.19	810.84
09/21/59	89.25	810.78
09/29/59	89.41	810.62
10/05/59	89.50	810.53
10/14/59	89.50	810.53
10/20/59	89.59	810.44
10/27/59	89.63	810.40
11/04/59	89.71	810.32
11/11/59	89.71	810.32
11/17/59	89.74	810.29
11/23/59	89.77	810.26
11/30/59	89.71	810.32
12/07/59	89.65	810.38
12/15/59	89.53	810.50
12/22/59	89.60	810.43
12/30/59	89.24	810.79
01/05/60	89.36	810.67
01/12/60	89.20	810.83
01/19/60	89.34	810.69
01/25/60	89.52	810.51
02/03/60	89.68	810.35
02/09/60	89.79	810.24
02/16/60	89.91	810.12
02/24/60	90.03	810.00
03/01/60	90.17	809.86
03/08/60	90.30	809.73
03/15/60	90.39	809.64
03/22/60	90.49	809.54
03/29/60	90.58	809.45
04/05/60	90.60	809.43
04/11/60	90.65	809.38
04/19/60	90.72	809.31
04/27/60	90.81	809.22
05/04/60	90.99	809.04
05/11/60	91.11	808.92
05/19/60	91.41	808.62
05/25/60	91.82	808.21
06/02/60	92.38	807.65
06/11/60	92.65	807.38
06/18/60	92.70	807.33
06/25/60	92.68	807.35
07/01/60	92.67	807.36
07/07/60	92.58	807.45
07/14/60	92.52	807.51
07/21/60	92.52	807.51
07/28/60	92.60	807.43
08/04/60	92.60	807.43
08/12/60	92.75	807.28
08/19/60	92.85	807.18
08/27/60	92.88	807.15
09/02/60	92.86	807.17
09/09/60	92.87	807.16
09/16/60	92.88	807.15
09/25/60	92.90	807.13
10/03/60	92.89	807.14
10/10/60	92.31	807.72
10/17/60	92.83	807.20
10/24/60	92.78	807.25
10/31/60	92.73	807.30
11/07/60	92.63	807.40
11/15/60	92.71	807.32
12/02/60	92.17	807.86
12/08/60	92.09	807.94
12/13/60	92.12	807.91
12/20/60	92.50	807.53
12/27/60	92.46	807.57
01/03/61	92.55	807.48
01/10/61	92.73	807.30
01/19/61	93.01	807.02
01/25/61	93.20	806.83
02/02/61	93.41	806.62
02/07/61	93.60	806.43
02/11/61	94.18	805.85
02/18/61	94.48	805.55
02/25/61	94.69	805.34
03/04/61	94.89	805.14
03/13/61	95.07	804.96
03/21/61	95.27	804.76
03/25/61	95.46	804.57
04/03/61	95.54	804.49
04/11/61	95.60	804.43
04/17/61	95.74	804.29
04/25/61	95.81	804.22
05/02/61	95.88	804.15
05/09/61	95.95	804.08
05/21/61	96.10	803.93
05/28/61	96.18	803.85
06/03/61	96.33	803.70
06/09/61	96.42	803.61
06/16/61	96.58	803.45
06/23/61	96.80	803.23
06/30/61	96.93	803.10
07/07/61	97.20	802.83
07/14/61	97.37	802.66
07/21/61	97.60	802.43
07/27/61	97.78	802.25
08/02/61	97.97	802.06
08/08/61	98.06	801.97
08/14/61	98.19	801.84
08/21/61	98.25	801.78
08/28/61	98.36	801.67
09/05/61	98.50	801.53
09/11/61	98.64	801.39
09/19/61	98.77	801.26
09/26/61	98.88	801.15
10/03/61	98.99	801.04
10/10/61	99.15	800.88
10/17/61	99.32	800.71
10/24/61	99.46	800.57
10/31/61	99.75	800.28
11/08/61	100.06	799.97
11/14/61	100.10	799.93
11/21/61	99.94	800.09
11/28/61	99.88	800.15
12/05/61	99.94	800.09
12/13/61	100.07	799.96
12/20/61	100.10	799.93
12/27/61	100.15	799.88
01/06/62	100.21	799.82
01/20/62	100.52	799.51
01/26/62	100.49	799.54
02/02/62	100.46	799.57
02/09/62	100.53	799.50
02/16/62	100.63	799.40
02/23/62	100.72	799.31
03/02/62	100.80	799.23
03/09/62	100.86	799.17
03/16/62	100.98	799.05
03/23/62	100.13	799.90
03/30/62	101.25	798.78
04/06/62	101.33	798.70
04/13/62	101.42	798.61
04/19/62	101.51	798.52
04/30/62	101.66	798.37
05/07/62	101.74	798.29
05/14/62	101.83	798.20
05/21/62	101.74	798.29
05/25/62	101.69	798.34
06/01/62	102.67	797.36
06/08/62	102.21	797.82
06/15/62	102.14	797.89
06/20/62	102.30	797.73
06/27/62	102.87	797.16
07/06/62	103.34	796.69

139-049-06ADB **(Continued)** MP Elev (msl,ft)=900.03

West Fargo North Aquifer SI (ft.)=0-230

Date	Depth to Water (ft)	WL Elev (msl. ft)
07/20/62	102.90	797.13
07/27/62	103.17	796.86
08/03/62	103.37	796.66
08/10/62	103.58	796.45
08/17/62	103.78	796.25
08/24/62	103.93	796.10
08/31/62	104.07	795.96
09/07/62	104.26	795.77
09/14/62	104.37	795.66
09/21/62	104.50	795.53
09/28/62	104.57	795.46
10/05/62	104.69	795.34
10/12/62	104.81	795.22
10/19/62	104.93	795.10
10/26/62	105.05	794.98
11/02/62	105.14	794.89
11/09/62	105.24	794.79
11/16/62	105.32	794.71
11/23/62	105.41	794.62
11/30/62	105.34	794.69
12/07/62	105.29	794.74
12/14/62	105.22	794.81
12/26/62	105.09	794.94
01/11/63	104.95	795.08
01/18/63	104.92	795.11
01/25/63	104.84	795.19
02/01/63	104.81	795.22
02/08/63	104.79	795.24
02/15/63	104.78	795.25
02/21/63	104.78	795.25
03/01/63	104.82	795.21
03/08/63	104.84	795.19
03/15/63	104.88	795.15
03/25/63	104.92	795.11
03/29/63	104.97	795.06
04/08/63	105.06	794.97
04/15/63	105.11	794.92
04/22/63	105.18	794.85
04/29/63	105.23	794.80
05/06/63	105.25	794.78
05/13/63	105.25	794.78
05/20/63	105.23	794.80
05/27/63	105.27	794.76
06/03/63	105.29	794.74
06/10/63	105.23	794.80
06/17/63	105.12	794.91
06/28/63	105.08	794.95
07/12/63	105.11	794.92
07/19/63	105.12	794.91
07/26/63	105.11	794.92
08/02/63	105.14	794.89
08/12/63	105.33	794.70
08/19/63	105.40	794.63
08/26/63	105.48	794.55
09/04/63	105.54	794.49
09/16/63	105.61	794.42
09/23/63	105.68	794.35
10/07/63	105.78	794.25
10/14/63	105.90	794.13
10/21/63	106.01	794.02
10/28/63	106.26	793.77
11/04/63	106.44	793.59
11/15/63	106.58	793.45
11/26/63	106.78	793.25
12/03/63	106.82	793.21
12/10/63	106.94	793.09
12/17/63	106.99	793.04
12/24/63	106.92	793.11
01/03/64	106.83	793.20
01/13/64	106.67	793.36
01/20/64	106.57	793.46
01/27/64	106.31	793.72
02/03/64	106.28	793.75
02/10/64	106.17	793.86
02/16/64	106.42	793.61
02/24/64	106.31	793.72
03/02/64	106.24	793.79
03/20/64	106.13	793.90
03/27/64	106.10	793.93
04/03/64	106.16	793.87
04/10/64	106.23	793.80
04/25/64	106.34	793.69
05/01/64	106.35	793.68
05/11/64	106.38	793.65
05/25/64	106.44	793.59
05/30/64	106.48	793.55
06/05/64	106.48	793.55
06/12/64	106.50	793.53
06/19/64	106.51	793.52
07/03/64	106.57	793.46
07/10/64	106.62	793.41
07/17/64	106.69	793.34
07/27/64	106.74	793.29
08/03/64	106.88	793.15
08/10/64	106.93	793.10
08/19/64	107.05	792.98
08/28/64	107.18	792.85
09/07/64	107.23	792.80
09/14/64	107.33	792.70
09/21/64	107.57	792.46
09/28/64	107.78	792.25
10/05/64	107.68	792.35
10/12/64	107.79	792.24
10/19/64	107.84	792.19
10/26/64	107.96	792.07
11/02/64	108.02	792.01
11/16/64	108.08	791.95
11/23/64	108.16	791.87
11/30/64	108.26	791.77
12/07/64	108.34	791.69
12/14/64	108.45	791.58
12/21/64	108.52	791.51
12/28/64	108.54	791.49
01/04/65	108.60	791.43
01/11/65	108.65	791.38
01/18/65	108.69	791.34
01/25/65	108.73	791.30
02/01/65	108.80	791.23
02/08/65	108.87	791.16
02/15/65	108.91	791.12
02/22/65	108.97	791.06
03/01/65	109.04	790.99
03/08/65	109.07	790.96
03/15/65	109.13	790.90
03/26/65	109.18	790.85
04/07/65	109.19	790.84
04/12/65	109.22	790.81
04/19/65	109.21	790.82
04/26/65	109.18	790.85
05/03/65	109.22	790.81
05/10/65	109.24	790.79
05/17/65	109.27	790.76
05/24/65	109.30	790.73
06/02/65	109.31	790.72
06/11/65	109.39	790.64
06/18/65	109.42	790.61
06/25/65	109.37	790.66
07/02/65	109.34	790.69
07/09/65	109.36	790.67
07/16/65	109.35	790.68
07/28/65	109.42	790.61
08/06/65	109.50	790.53
08/13/65	109.60	790.43
08/20/65	109.65	790.38
08/27/65	109.74	790.29
09/03/65	108.90	791.13
09/13/65	110.09	789.94
09/20/65	110.15	789.88
09/27/65	110.20	789.83
10/04/65	110.24	789.79
10/11/65	110.26	789.77
10/18/65	110.31	789.72
10/25/65	110.43	789.60
11/01/65	110.50	789.53
11/08/65	110.59	789.44
11/15/65	110.64	789.39
11/22/65	110.66	789.37
12/06/65	110.71	789.32
12/13/65	110.77	789.26
12/20/65	110.84	789.19
12/30/65	110.90	789.13
01/10/66	110.94	789.09
01/17/66	110.97	789.06
01/24/66	111.01	789.02
01/31/66	111.02	789.01
02/07/66	111.04	788.99
02/14/66	111.06	788.97
02/21/66	111.10	788.93
02/28/66	111.13	788.90
03/14/66	111.16	788.87
03/21/66	111.19	788.84
03/28/66	111.18	788.85
04/05/66	111.11	788.92
04/12/66	111.10	788.93
04/19/66	111.07	788.96
04/25/66	111.07	788.96
05/02/66	111.04	788.99
01/24/67	112.40	787.63
03/02/67	112.80	787.23
03/23/67	113.04	786.99
04/28/67	113.18	786.85
05/25/67	113.25	786.78
06/22/67	113.36	786.67
07/11/67	113.46	786.57
08/17/67	113.43	786.60
10/13/67	113.81	786.22
11/08/67	114.00	786.03
12/05/67	114.18	785.85
01/23/68	114.67	785.36
03/06/68	115.05	784.98
04/02/68	115.03	785.00
05/01/68	114.80	785.23
05/27/68	114.69	785.34
06/26/68	114.57	785.46
07/23/68	114.50	785.53
08/21/68	114.48	785.55
09/18/68	109.58	790.45
10/15/68	114.55	785.48
11/14/68	114.67	785.36
12/10/68	114.85	785.18
01/10/69	115.03	785.00
02/13/69	115.35	784.68
03/04/69	115.54	784.49
04/30/69	115.76	784.27
06/02/69	115.81	784.22
06/24/69	115.95	784.08
07/15/69	116.07	783.96
08/20/69	116.91	783.12
09/16/69	117.42	782.61
10/14/69	117.57	782.46
11/14/69	118.08	781.95
12/03/69	118.36	781.67
01/05/70	118.59	781.44
02/06/70	118.86	781.17
03/06/70	118.89	781.14
05/23/70	118.58	781.45
06/24/70	118.34	781.69
07/22/70	118.47	781.56
08/18/70	118.43	781.60
09/15/70	118.40	781.63
10/15/70	118.41	781.62
11/12/70	118.51	781.52
12/01/70	118.49	781.54
01/13/71	118.91	781.12
02/11/71	118.66	781.37
03/09/71	118.84	781.19
04/03/71	118.86	781.17
04/29/71	118.82	781.21
06/07/71	118.47	781.56
07/09/71	118.29	781.74
08/04/71	118.29	781.74
08/31/71	118.28	781.75
10/05/71	118.38	781.65
11/02/71	118.60	781.43
11/30/71	118.82	781.21
01/04/72	119.20	780.83
02/09/72	119.50	780.53
03/10/72	119.69	780.34
04/13/72	119.74	780.29
05/02/72	119.72	780.31
06/05/72	119.35	780.68
07/06/72	119.47	780.56
08/09/72	119.60	780.43
09/06/72	119.58	780.45
10/04/72	119.70	780.33
10/31/72	119.95	780.08
12/07/72	120.24	779.79
03/01/73	120.58	779.45
04/03/73	120.58	779.45
05/01/73	120.23	779.80
06/11/73	119.75	780.28
07/13/73	119.82	780.21
08/07/73	119.99	780.04
08/25/73	120.13	779.90
09/06/73	120.13	779.90
10/04/73	120.22	779.81
11/06/73	120.35	779.68
12/05/73	120.47	779.56
01/10/74	120.68	779.35
02/12/74	120.74	779.29
03/13/74	120.76	779.27
04/02/74	120.78	779.25
05/10/74	120.89	779.14
06/03/74	120.87	779.16
07/11/74	120.00	780.03
08/09/74	121.22	778.81
09/10/74	121.32	778.71
09/30/74	121.29	778.74
11/05/74	121.30	778.73
12/02/74	121.34	778.69
01/29/75	121.09	778.94
03/19/75	121.22	778.81
06/16/75	120.90	779.13
08/05/75	121.00	779.03
10/20/75	121.47	778.56
12/04/75	121.65	778.38
02/11/76	121.65	778.38
03/10/76	121.62	778.41
05/03/76	121.69	778.34
06/01/76	121.77	778.26
07/14/76	121.98	778.05
08/10/76	122.15	777.88
09/10/76	122.42	777.61
10/13/76	122.68	777.35
11/09/76	122.42	777.61
11/29/76	123.05	776.98
01/13/77	122.98	777.05
01/20/77	122.99	777.04
02/09/77	123.12	776.91
03/09/77	122.80	777.23
04/04/77	122.60	777.43
05/11/77	122.62	777.41
06/13/77	122.69	777.34
07/21/77	122.79	777.24
08/17/77	122.85	777.18
09/19/77	122.87	777.16
10/21/77	122.73	777.30
11/15/77	122.73	777.30
12/01/77	122.73	777.30
01/19/78	123.16	776.87
02/21/78	123.47	776.56
03/14/78	123.46	776.57
04/24/78	122.79	777.24
05/22/78	122.45	777.58

139-049-06ADB **(Continued)** MP Elev (msl,ft)=900.03

West Fargo North Aquifer SI (ft.)=0-230

Date	Depth to Water (ft)	WL Elev (msl, ft)
06/19/78	122.10	777.93
07/19/78	122.20	777.83
08/15/78	122.45	777.58
09/22/78	122.32	777.71
10/17/78	121.97	778.06
11/20/78	121.97	778.06
12/21/78	121.08	778.95
01/25/79	121.02	779.01
02/12/79	121.15	778.88
03/20/79	120.69	779.34
04/30/79	120.45	779.58
05/16/79	120.30	779.73
06/18/79	120.04	779.99
07/16/79	120.43	779.60
08/21/79	120.58	779.45
09/17/79	120.25	779.78
10/23/79	119.98	780.05
11/26/79	119.84	780.19
12/18/79	119.92	780.11
01/14/80	119.44	780.59
03/21/80	119.20	780.83
04/14/80	119.43	780.60
04/17/80	119.22	780.81
05/14/80	119.58	780.45
06/17/80	120.36	779.67
07/15/80	120.51	779.52
08/12/80	120.72	779.31
09/08/80	121.01	779.02
10/08/80	121.12	778.91
11/17/80	121.49	778.54
12/17/80	121.48	778.55
01/20/81	121.72	778.31
02/23/81	121.47	778.56
03/16/81	121.58	778.45
04/28/81	121.47	778.56
06/11/81	121.58	778.45
07/20/81	121.93	778.10
07/22/81	120.99	779.04
09/02/81	121.98	778.05
10/07/81	122.07	777.96
12/03/81	122.13	777.90
03/29/82	122.04	777.99
05/20/82	121.94	778.09
06/30/82	122.00	778.03
08/23/82	122.39	777.64
08/24/82	122.40	777.63
10/30/82	122.35	777.68
11/16/82	122.59	777.44
11/17/82	122.58	777.45
11/21/82	122.43	777.60
11/29/82	123.79	776.24
01/26/83	122.78	777.25
03/09/83	122.32	777.71
04/13/83	122.48	777.55
04/18/83	122.79	777.24
05/19/83	122.42	777.61
05/24/83	122.35	777.68
06/02/83	122.31	777.72
06/10/83	122.33	777.70
06/21/83	122.36	777.67
06/22/83	122.38	777.65
07/28/83	122.65	777.38
08/18/83	122.74	777.29
08/29/83	122.78	777.25
09/14/83	122.77	777.26
10/06/83	122.74	777.29
10/12/83	122.83	777.20
11/29/83	122.59	777.44
12/14/83	122.78	777.25
01/05/84	122.74	777.29
02/15/84	122.44	777.59
03/22/84	122.47	777.56
04/11/84	122.43	777.60
05/16/84	122.12	777.91
05/23/84	121.98	778.05
06/14/84	121.93	778.10
06/22/84	122.07	777.96
08/02/84	122.18	777.85
08/08/84	122.20	777.83
08/28/84	122.34	777.69
09/12/84	122.16	777.87
10/09/84	122.79	777.24
10/25/84	122.53	777.50
10/31/84	124.96	775.07
11/28/84	122.38	777.65
12/05/84	122.48	777.55
03/12/85	122.39	777.64
04/15/85	122.16	777.87
05/03/85	122.14	777.89
06/05/85	121.98	778.05
06/07/85	121.95	778.08
07/08/85	121.95	778.08
08/18/85	122.24	777.79
09/17/85	122.33	777.70
09/22/85	122.37	777.66
10/23/85	122.22	777.81
10/25/85	122.22	777.81
12/04/85	122.55	777.48
12/07/85	122.58	777.45
01/31/86	122.51	777.52
04/13/86	122.33	777.70
05/10/86	125.45	774.58
05/22/86	122.20	777.83
06/06/86	125.63	774.40
07/04/86	122.35	777.68
07/30/86	122.30	777.73
08/03/86	125.65	774.38
08/30/86	124.89	775.14
09/03/86	122.41	777.62
10/09/86	122.12	777.91
11/01/86	124.29	775.74
11/26/86	122.40	777.63
12/07/86	123.95	776.08
03/12/87	122.54	777.49
04/25/87	122.39	777.64
05/27/87	122.42	777.61
05/30/87	122.57	777.46
06/27/87	122.60	777.43
07/02/87	122.54	777.49
08/01/87	122.68	777.35
08/30/87	122.87	777.16
09/24/87	122.75	777.28
09/25/87	122.85	777.18
10/26/87	122.49	777.54
10/31/87	122.55	777.48
11/29/87	122.38	777.65
12/10/87	122.14	777.89
12/20/87	122.31	777.72
03/30/88	122.35	777.68
04/02/88	122.59	777.44
04/29/88	122.64	777.39
05/10/88	122.47	777.56
05/28/88	122.69	777.34
06/25/88	122.95	777.08
07/23/88	123.30	776.73
08/02/88	123.22	776.81
08/21/88	123.44	776.59
09/08/88	123.50	776.53
09/16/88	123.77	776.26
10/12/88	123.93	776.10
10/15/88	124.05	775.98
11/06/88	124.07	775.96
11/25/88	123.95	776.08
12/11/88	124.18	775.85
03/08/89	124.63	775.40
04/21/89	124.75	775.28
05/13/89	124.84	775.19
06/03/89	124.93	775.10
06/06/89	124.80	775.23
07/01/89	124.10	775.93
07/20/89	125.27	774.76
07/30/89	125.47	774.56
09/07/89	125.67	774.36
09/10/89	124.52	775.51
09/26/89	125.86	774.17
10/01/89	125.86	774.17
10/19/89	126.05	773.98
10/29/89	126.14	773.89
11/19/89	126.13	773.90
11/29/89	126.14	773.89
01/23/90	126.40	773.63
05/02/90	126.54	773.49
05/04/90	126.69	773.34
05/26/90	126.63	773.40
06/07/90	126.54	773.49
06/30/90	126.65	773.38
08/04/90	126.77	773.26
08/23/90	126.74	773.29
09/02/90	126.77	773.26
09/27/90	126.70	773.33
09/29/90	126.79	773.24
10/26/90	126.40	773.63
11/09/90	126.68	773.35
11/18/90	126.37	773.66
12/09/90	126.83	773.20
01/10/91	127.28	772.75
03/21/91	126.48	773.55
03/30/91	127.80	772.23
05/11/91	127.01	773.02
06/01/91	126.62	773.41
06/07/91	126.95	773.08
06/21/91	126.82	773.21
07/13/91	125.01	775.02
08/10/91	127.10	772.93
08/19/91	126.84	773.19
08/31/91	127.20	772.83
09/28/91	127.01	773.02
10/08/91	126.52	773.51
10/20/91	127.08	772.95
11/16/91	127.53	772.50
11/20/91	126.95	773.08
12/21/91	127.36	772.67
04/09/92	127.04	772.99
04/18/92	126.63	773.40
05/20/92	126.90	773.13
06/13/92	126.79	773.24
06/26/92	126.70	773.33
07/26/92	127.08	772.95
08/27/92	127.12	772.91
09/24/92	126.66	773.37
10/18/92	127.36	772.67
11/12/92	127.24	772.79
11/18/92	127.20	772.83
12/05/92	127.32	772.71
03/22/93	127.80	772.23
05/01/93	127.35	772.68
06/04/93	127.29	772.74
06/14/93	127.11	772.92
08/06/93	127.19	772.84
08/29/93	127.10	772.93
09/25/93	127.32	772.71
10/04/93	127.20	772.83
10/18/93	127.38	772.65
11/08/93	127.25	772.78
11/11/93	127.33	772.70
02/23/94	127.70	772.33
04/16/94	128.15	771.88
05/15/94	127.28	772.75
05/27/94	127.48	772.55
06/11/94	127.47	772.56
07/24/94	127.50	772.53
08/20/94	127.58	772.45
09/20/94	127.57	772.46
09/24/94	127.64	772.39
10/28/94	127.25	772.78
11/15/94	127.33	772.70
11/26/94	127.54	772.49
04/30/95	127.86	772.17
05/28/95	127.98	772.05
07/01/95	127.97	772.06
08/05/95	128.00	772.03
09/09/95	128.12	771.91
10/27/95	127.72	772.31
11/21/95	128.23	771.80
06/04/96	128.75	771.28
06/30/96	128.79	771.24
07/29/96	131.94	768.09
08/25/96	129.01	771.02
10/05/96	129.01	771.02
11/02/96	128.84	771.19

139-049-08BA2
West Fargo North Aquifer

MP Elev (msl,ft)=896.7
SI (ft.)=0-87

Date	Depth to Water (ft)	WL Elev (msl, ft)	Date	Depth to Water (ft)	WL Elev (msl, ft)	Date	Depth to Water (ft)	WL Elev (msl, ft)	Date	Depth to Water (ft)	WL Elev (msl, ft)
07/27/40	31.05	865.65	02/22/41	35.49	861.21	11/01/41	35.86	860.84	07/04/42	38.79	857.91
07/31/40	30.00	866.70	03/01/41	35.60	861.10	11/08/41	35.86	860.84	07/12/42	39.59	857.11
08/03/40	27.44	869.26	03/08/41	32.94	863.76	11/15/41	36.47	860.23	07/19/42	39.57	857.13
08/10/40	27.37	869.33	03/15/41	35.82	860.88	11/22/41	39.59	857.11	07/26/42	41.05	855.65
08/14/40	28.86	867.84	03/23/41	35.90	860.80	11/29/41	40.16	856.54	08/01/42	41.60	855.10
08/21/40	28.76	867.94	03/29/41	35.88	860.82	12/06/41	40.51	856.19	08/09/42	42.15	854.55
08/31/40	28.17	868.53	04/05/41	35.95	860.75	12/13/41	40.72	855.98	08/15/42	42.09	854.61
09/07/40	27.24	869.46	04/12/41	35.84	860.86	12/20/41	40.77	855.93	08/23/42	43.32	853.38
09/14/40	26.67	870.03	04/19/41	35.55	861.15	12/27/41	40.76	855.94	08/30/42	43.47	853.23
09/21/40	26.64	870.06	04/26/41	35.43	861.27				09/06/42	43.31	853.39
09/24/40	26.87	869.83	05/03/41	35.33	861.37	01/04/42	40.08	856.62	09/13/42	43.93	852.77
09/25/40	26.85	869.85	05/10/41	35.36	861.34	01/10/42	41.16	855.54	09/20/42	43.97	852.73
09/26/40	26.70	870.00	05/17/41	35.04	861.66	01/17/42	41.09	855.61	09/27/42	44.01	852.69
09/27/40	26.85	869.85	05/24/41	35.05	861.65	01/24/42	40.80	855.90	10/04/42	44.06	852.64
09/28/40	26.90	869.80	05/31/41	37.39	859.31	01/31/42	40.40	856.30	10/11/42	44.03	852.67
10/05/40	35.40	861.30	06/06/41	32.76	863.94	02/07/42	40.01	856.69	10/17/42	44.06	852.64
10/12/40	33.40	863.30	06/14/41	33.60	863.10	02/14/42	40.21	856.49	10/24/42	44.27	852.43
10/19/40	33.95	862.75	06/21/41	32.91	863.79	02/21/42	39.79	856.91	11/12/42	45.07	851.63
10/26/40	32.22	864.48	06/28/41	33.43	863.27	02/28/42	39.94	856.76	11/21/42	45.25	851.45
11/02/40	32.30	864.40	07/05/41	33.92	862.78	03/07/42	39.81	856.89	11/28/42	45.43	851.27
11/09/40	30.86	865.84	07/12/41	34.38	862.32	03/14/42	39.62	857.08	12/05/42	45.70	851.00
11/16/40	31.70	865.00	07/19/41	34.91	861.79	03/21/42	38.61	858.09	12/12/42	46.06	850.64
11/23/40	32.24	864.46	07/26/41	35.23	861.47	03/28/42	38.58	858.12	12/19/42	46.32	850.38
11/30/40	32.54	864.16	08/02/41	36.09	860.61	04/04/42	37.89	858.81	12/26/42	46.58	850.12
12/07/40	32.81	863.89	08/09/41	35.93	860.77	04/11/42	37.93	858.77			
12/14/40	32.84	863.86	08/16/41	36.11	860.59	04/18/42	37.85	858.85	01/02/43	46.47	850.23
12/21/40	32.91	863.79	08/23/41	36.21	860.49	04/25/42	38.26	858.44	01/09/43	46.73	849.97
12/28/40	32.97	863.73	08/30/41	36.34	860.36	05/02/42	38.18	858.52	01/16/43	46.80	849.90
			09/06/41	36.42	860.28	05/09/42	38.22	858.48	01/23/43	46.78	849.92
01/04/41	33.02	863.68	09/13/41	36.41	860.29	05/17/42	38.19	858.51	01/30/43	46.74	849.96
01/11/41	32.97	863.73	09/20/41	36.51	860.19	05/23/42	38.24	858.46	02/06/43	46.57	850.13
01/18/41	33.46	863.24	09/28/41	36.53	860.17	05/30/42	38.16	858.54	02/13/43	46.34	850.36
01/26/41	34.00	862.70	10/04/41	36.76	859.94	06/06/42	38.16	858.54	02/20/43	46.30	850.40
02/01/41	34.57	862.13	10/11/41	37.85	858.85	06/14/42	38.29	858.41	02/27/43	45.93	850.77
02/08/41	34.62	862.08	10/18/41	37.67	859.03	06/21/42	38.29	858.41	03/06/43	45.89	850.81
02/15/41	35.10	861.60	10/25/41	35.28	861.42	06/27/42	38.83	857.87	03/13/43	45.85	850.85

139-049-09ADD
West Fargo South Aquifer

MP Elev (msl,ft)=903.1
SI (ft.)=172-177

Date	Depth to Water (ft)	WL Elev (msl, ft)	Date	Depth to Water (ft)	WL Elev (msl, ft)	Date	Depth to Water (ft)	WL Elev (msl, ft)	Date	Depth to Water (ft)	WL Elev (msl, ft)
09/30/82	67.64	835.46	07/08/85	103.70	799.40	07/12/88	112.06	791.04	05/11/91	104.60	798.50
10/27/82	67.26	835.84	08/18/85	103.13	799.97	07/23/88	113.02	790.08	06/02/91	106.51	796.59
11/17/82	67.22	835.88	09/21/85	100.13	802.97	08/20/88	113.96	789.14	07/13/91	106.01	797.09
			10/25/85	100.28	802.82	08/26/88	113.93	789.17	08/10/91	111.39	791.71
03/17/83	66.99	836.11	12/06/85	99.77	803.33	09/17/88	114.29	788.81	08/31/91	110.63	792.47
04/18/83	66.70	836.40				10/15/88	110.20	792.90	09/28/91	111.15	791.95
05/19/83	66.76	836.34	05/11/86	99.67	803.43	11/06/88	109.30	793.80	10/20/91	112.70	790.40
05/24/83	66.90	836.20	06/06/86	101.70	801.40	12/11/88	108.77	794.33	11/16/91	112.86	790.24
05/25/83	66.84	836.26	07/04/86	104.75	798.35				12/21/91	111.11	791.99
06/02/83	67.27	835.83	07/15/86	104.67	798.43	04/21/89	106.52	796.58			
06/21/83	68.13	834.97	08/02/86	103.71	799.39	05/13/89	106.45	796.65	04/18/92	111.05	792.05
07/11/83	68.61	834.49	08/29/86	103.27	799.83	06/03/89	106.94	796.16	05/20/92	112.18	790.92
07/28/83	75.45	827.65	10/09/86	102.79	800.31	07/01/89	110.88	792.22	06/13/92	113.79	789.31
08/18/83	82.90	820.20	11/02/86	103.35	799.75	07/30/89	113.44	789.66	07/26/92	111.83	791.27
09/14/83	83.88	819.22	12/07/86	101.88	801.22	09/10/89	109.62	793.48	08/27/92	112.43	790.67
10/12/83	83.99	819.11	12/10/86	101.50	801.60	10/01/89	107.54	795.56	09/26/92	112.57	790.53
11/08/83	85.48	817.62				10/29/89	104.42	798.68	10/18/92	112.30	790.80
12/14/83	86.70	816.40	04/24/87	101.67	801.43	11/19/89	99.76	803.34	11/12/92	110.61	792.49
			05/30/87	106.25	796.85				12/05/92	110.11	792.99
04/11/84	86.77	816.33	06/27/87	110.96	792.14	01/03/90	94.22	808.88			
05/16/84	96.83	806.27	07/16/87	111.60	791.50	05/05/90	102.35	800.75	05/02/93	107.67	795.43
05/21/84	98.33	804.77	07/31/87	110.76	792.34	05/25/90	103.74	799.36	06/04/93	113.33	789.77
07/12/84	100.28	802.82	08/29/87	111.07	792.03	06/30/90	106.28	796.82	08/06/93	115.92	787.18
08/09/84	104.21	798.89	09/25/87	110.76	792.34	08/04/90	108.42	794.68	08/29/93	117.08	786.02
09/12/84	104.05	799.05	10/31/87	104.31	798.79	09/02/90	112.90	790.20	09/25/93	117.66	785.44
10/09/84	100.83	802.27	11/29/87	105.99	797.11	09/28/90	110.60	792.50	10/18/93	117.17	785.93
10/31/84	100.86	802.24	12/20/87	105.94	797.16	10/09/90	109.70	793.40	11/11/93	114.98	788.12
12/05/84	101.02	802.08				10/27/90	107.94	795.16			
			04/02/88	105.04	798.06	11/18/90	105.00	798.10	04/17/94	113.82	789.28
04/09/85	100.12	802.98	04/30/88	106.18	796.92	12/09/90	104.04	799.06	05/15/94	113.65	789.45
05/05/85	93.65	809.45	05/28/88	108.47	794.63				06/11/94	117.02	786.08
06/08/85	102.32	800.78	06/25/88	111.74	791.36	03/30/91	104.55	798.55	07/24/94	116.50	786.60

139-049-09CCCD MP Elev (msl,ft)=904.4

Undefined Aquifer SI (ft.)=0-0

Date	Depth to Water (ft)	WL Elev (msl, ft)
04/19/83	91.23	813.17
05/19/83	91.32	813.08
05/24/83	91.60	812.80
06/02/83	91.36	813.04
06/21/83	91.45	812.95
07/11/83	91.50	812.90
07/28/83	91.65	812.75
08/18/83	91.93	812.47
09/14/83	92.35	812.05
11/08/83	93.04	811.36
12/14/83	93.33	811.07
04/11/84	94.92	809.48
05/16/84	95.47	808.93
07/12/84	96.45	807.95
08/09/84	97.06	807.34
09/12/84	97.78	806.62
10/09/84	98.40	806.00
10/31/84	98.39	806.01
12/05/84	98.92	805.48
04/09/85	99.99	804.41
05/05/85	99.90	804.50
06/07/85	100.10	804.30
07/08/85	100.45	803.95
08/18/85	101.15	803.25
09/22/85	101.49	802.91
10/25/85	101.64	802.76
05/11/86	102.27	802.13
06/06/86	102.40	802.00
07/04/86	102.69	801.71
08/02/86	103.03	801.37
08/29/86	103.15	801.25
10/09/86	103.12	801.28
11/02/86	103.45	800.95
12/07/86	103.93	800.47
04/24/87	103.79	800.61
05/31/87	103.83	800.57
06/27/87	104.10	800.30
07/31/87	104.30	800.10
08/29/87	104.70	799.70
09/25/87	108.53	795.87
10/31/87	108.07	796.33
11/29/87	107.80	796.60
12/20/87	108.08	796.32
04/02/88	106.78	797.62
04/30/88	105.83	798.57
05/28/88	105.96	798.44
06/25/88	106.93	797.47
07/23/88	106.58	797.82
08/21/88	106.66	797.74
09/17/88	107.02	797.38
10/15/88	107.12	797.28
11/06/88	107.33	797.07
12/11/88	107.47	796.93
04/21/89	107.66	796.74
05/13/89	107.69	796.71
06/03/89	107.85	796.55
07/01/89	108.05	796.35
07/30/89	108.35	796.05
09/10/89	108.35	796.05
10/01/89	108.36	796.04
10/29/89	108.52	795.88
11/19/89	108.60	795.80
05/05/90	108.67	795.73
05/26/90	108.66	795.74
06/30/90	108.65	795.75
08/04/90	108.98	795.42
09/02/90	109.16	795.24
09/29/90	109.32	795.08
10/27/90	109.34	795.06
11/18/90	109.39	795.01
12/09/90	109.48	794.92
03/30/91	109.47	794.93
05/11/91	109.44	794.96
06/02/91	109.40	795.00
07/14/91	109.46	794.94
08/10/91	109.72	794.68
08/31/91	109.84	794.56
09/28/91	109.90	794.50
10/20/91	110.03	794.37
11/17/91	110.04	794.36
12/21/91	109.62	794.78
04/18/92	110.23	794.17
05/20/92	110.38	794.02
06/13/92	110.41	793.99
07/26/92	110.56	793.84
08/27/92	110.68	793.72
09/26/92	110.74	793.66
10/18/92	110.96	793.44
11/12/92	110.90	793.50
12/05/92	110.82	793.58
05/02/93	111.19	793.21
06/04/93	111.16	793.24
08/06/93	111.27	793.13
08/29/93	111.45	792.95
09/25/93	110.44	793.96
10/18/93	111.69	792.71
11/11/93	111.74	792.66
04/17/94	112.12	792.28
05/15/94	112.19	792.21
06/11/94	112.27	792.13
07/24/94	111.38	793.02
08/20/94	112.45	791.95
09/25/94	112.55	791.85
10/29/94	112.43	791.97
11/26/94	112.56	791.84
04/30/95	112.60	791.80
05/28/95	112.52	791.88
07/02/95	113.05	791.35
08/05/95	113.18	791.22
09/09/95	113.32	791.08
10/28/95	113.25	791.15
11/23/95	113.32	791.08
06/04/96	113.52	790.88
06/30/96	113.77	790.63
07/29/96	113.92	790.48
08/25/96	113.99	790.41
10/05/96	113.93	790.47
11/02/96	113.20	791.20

139-049-09DDD3 MP Elev (msl,ft)=906.8

West Fargo South Aquifer SI (ft.)=168-178

Date	Depth to Water (ft)	WL Elev (msl, ft)
08/01/64	44.96	861.84
08/25/64	45.33	861.47
09/30/64	44.62	862.18
11/02/64	44.70	862.10
12/10/64	44.71	862.09
01/18/65	44.92	861.88
02/15/65	44.97	861.83
03/15/65	44.96	861.84
04/14/65	44.70	862.10
05/10/65	45.04	861.76
06/11/65	45.09	861.71
07/13/65	45.32	861.48
08/03/65	45.57	861.23
09/14/65	45.54	861.26
10/21/65	45.54	861.26
11/16/65	45.59	861.21
12/14/65	45.38	861.42
01/11/66	45.51	861.29
02/08/66	45.37	861.43
03/14/66	45.52	861.28
04/14/66	45.52	861.28
05/10/66	45.69	861.11
06/14/66	45.80	861.00
07/13/66	46.23	860.57
07/22/66	46.46	860.34
08/17/66	46.21	860.59
09/28/66	46.24	860.56
10/26/66	46.25	860.55
12/02/66	46.27	860.53
12/29/66	46.06	860.74
01/26/67	45.86	860.94
03/02/67	46.02	860.78
03/23/67	46.09	860.71
04/28/67	46.74	860.06
05/25/67	46.24	860.56
06/22/67	46.42	860.38
07/11/67	46.70	860.10
08/17/67	47.33	859.47
10/12/67	47.31	859.49
11/08/67	47.35	859.45
12/05/67	47.31	859.49
01/23/68	47.34	859.46
03/06/68	47.56	859.24
04/02/68	47.42	859.38
05/01/68	47.43	859.37
05/27/68	47.54	859.26
06/26/68	47.71	859.09
07/23/68	47.93	858.87
08/21/68	48.35	858.45
09/18/68	48.23	858.57
10/15/68	48.03	858.77
11/13/68	48.15	858.65
12/10/68	47.94	858.86
01/10/69	47.99	858.81
02/13/69	47.74	859.06
03/03/69	48.18	858.62
04/30/69	47.85	858.95
06/02/69	47.96	858.84
06/24/69	48.00	858.80
07/15/69	48.15	858.65
08/21/69	48.51	858.29
09/16/69	48.23	858.57
10/15/69	48.56	858.24
11/14/69	48.58	858.22
12/03/69	48.60	858.20
01/05/70	48.63	858.17
02/06/70	48.47	858.33
03/06/70	48.35	858.45
05/23/70	48.49	858.31
06/23/70	48.59	858.21
07/22/70	49.28	857.52
09/15/70	49.66	857.14
10/16/70	49.56	857.24
11/13/70	49.49	857.31
12/01/70	49.30	857.50
01/13/71	49.37	857.43
02/11/71	49.31	857.49
04/03/71	49.39	857.41
04/29/71	49.53	857.27
06/07/71	49.68	857.12
07/09/71	49.84	856.96
08/04/71	50.07	856.73
08/31/71	50.28	856.52
10/05/71	49.97	856.83
11/02/71	49.83	856.97
11/29/71	49.90	856.90
01/04/72	49.72	857.08
02/09/72	49.79	857.01
03/09/72	49.75	857.05
04/13/72	49.80	857.00
05/02/72	49.93	856.87
06/06/72	50.12	856.68
07/06/72	50.48	856.32
08/09/72	50.57	856.23
09/05/72	50.67	856.13
10/04/72	50.95	855.85
11/01/72	50.83	855.97
12/07/72	50.02	856.78
03/01/73	50.71	856.09
04/03/73	50.64	856.16
05/01/73	50.48	856.32
06/11/73	51.04	855.76
07/13/73	51.45	855.35
08/08/73	51.12	855.68
10/04/73	50.80	856.00
11/06/73	50.71	856.09
12/05/73	50.66	856.14
01/10/74	50.50	856.30
03/13/74	50.26	856.54
04/02/74	50.18	856.62
06/04/74	50.53	856.27
09/10/74	50.79	856.01
12/02/74	50.95	855.85
03/19/75	50.64	856.16
06/16/75	50.89	855.91
09/16/75	51.20	855.60
12/04/75	51.00	855.80
03/10/76	51.03	855.77
06/01/76	51.31	855.49
09/10/76	52.48	854.32
11/30/76	52.62	854.18
03/09/77	52.58	854.22
06/13/77	53.05	853.75
09/19/77	53.58	853.22
12/01/77	53.32	853.48
03/14/78	53.09	853.71
06/19/78	53.90	852.90
08/20/78	54.96	851.84
11/20/78	55.28	851.52
03/20/79	54.41	852.39
06/18/79	54.68	852.12
09/17/79	55.39	851.41
11/26/79	55.19	851.61
03/21/80	54.42	852.38
05/22/80	55.48	851.32
06/17/80	55.80	851.00
07/15/80	55.70	851.10
08/12/80	55.90	850.90
09/09/80	56.15	850.65
10/08/80	55.79	851.01
11/17/80	55.77	851.03
02/23/81	55.43	851.37
04/27/81	55.48	851.32

139-049-10BAA
Undefined Aquifer

MP Elev (msl,ft)=906.4
SI (ft.)=204-210

Date	Depth to Water (ft)	WL Elev (msl, ft)
09/22/82	78.98	827.42
09/30/82	80.92	825.48
10/27/82	80.29	826.11
11/17/82	80.26	826.14
03/17/83	80.16	826.24
04/18/83	80.19	826.21
05/19/83	80.21	826.19
05/24/83	80.25	826.15
05/25/83	80.29	826.11
06/02/83	80.20	826.20
06/08/83	80.25	826.15
06/16/83	80.30	826.10
06/22/83	80.32	826.08
06/28/83	80.35	826.05
07/11/83	80.36	826.04
07/28/83	80.46	825.94
08/16/83	80.74	825.66
09/14/83	80.92	825.48
10/12/83	80.84	825.56
11/08/83	81.00	825.40
12/14/83	81.04	825.36
04/10/84	81.63	824.77
05/15/84	81.88	824.52
06/20/84	82.14	824.26
07/12/84	82.27	824.13
08/09/84	82.57	823.83
09/12/84	82.88	823.52
10/09/84	83.22	823.18
10/31/84	83.11	823.29
12/05/84	83.42	822.98
04/09/85	83.83	822.57
05/05/85	83.00	823.40
06/08/85	83.84	822.56
07/08/85	84.12	822.28
08/18/85	84.35	822.05
09/21/85	84.49	821.91
10/25/85	84.60	821.80
12/06/85	84.63	821.77
05/10/86	84.83	821.57
06/07/86	84.90	821.50
07/04/86	84.95	821.45
07/15/86	84.91	821.49
08/02/86	85.22	821.18
08/29/86	85.28	821.12
10/09/86	85.31	821.09
11/02/86	85.55	820.85
12/07/86	85.61	820.79
12/10/86	85.47	820.93
04/24/87	85.65	820.75
05/30/87	85.60	820.80
06/27/87	85.83	820.57
07/16/87	85.72	820.68
07/31/87	85.91	820.49
08/30/87	86.13	820.27
09/26/87	86.31	820.09
10/31/87	86.64	819.76
11/29/87	86.66	819.74
12/20/87	86.64	819.76
04/01/88	86.78	819.62
04/30/88	86.80	819.60
05/28/88	86.80	819.60
06/25/88	87.03	819.37
07/12/88	87.04	819.36
07/23/88	87.20	819.20
08/20/88	87.27	819.13
08/26/88	87.37	819.03
09/17/88	87.49	818.91
10/15/88	87.52	818.88
11/06/88	87.62	818.78
12/11/88	87.78	818.62
04/21/89	87.78	818.62
05/13/89	87.78	818.62
06/03/89	87.76	818.64
07/01/89	87.77	818.63
07/30/89	87.95	818.45
09/10/89	88.06	818.34
10/01/89	87.99	818.41
10/29/89	88.25	818.15
11/19/89	88.18	818.22
01/04/90	88.25	818.15
05/04/90	86.94	819.46
05/25/90	87.29	819.11
06/30/90	87.06	819.34

139-049-10CCC
West Fargo South Aquifer

MP Elev (msl,ft)=900.72
SI (ft.)=178-181

Date	Depth to Water (ft)	WL Elev (msl, ft)
09/08/81	54.07	846.65
11/19/81	55.84	844.88
12/03/81	55.68	845.04
05/20/82	54.83	845.89
06/30/82	54.77	845.95
08/23/82	57.04	843.68
08/24/82	55.06	845.66
10/30/82	56.56	844.16
11/17/82	54.53	846.19
11/21/82	56.46	844.26
03/17/83	54.85	845.87
04/18/83	54.28	846.44
05/19/83	54.26	846.46
05/24/83	54.32	846.40
05/25/83	54.34	846.38
06/02/83	54.34	846.38
06/21/83	54.87	845.85
07/11/83	55.32	845.40
07/28/83	65.64	835.08
08/18/83	75.30	825.42
09/14/83	75.21	825.51
10/12/83	75.37	825.35
11/08/83	76.83	823.89
12/14/83	77.63	823.09
04/11/84	88.50	812.22
05/16/84	90.14	810.58
06/21/84	91.87	808.85
07/12/84	95.28	805.44
08/09/84	101.65	799.07
09/12/84	97.73	802.99
10/09/84	95.51	805.21
10/31/84	94.73	805.99
12/05/84	94.90	805.82
04/09/85	94.04	806.68
05/05/85	86.90	813.82
06/08/85	98.21	802.51
07/08/85	101.15	799.57
08/18/85	97.25	803.47
09/21/85	94.61	806.11
10/25/85	94.04	806.68
12/06/85	93.72	807.00
05/11/86	93.07	807.65
06/06/86	96.62	804.10
07/04/86	100.82	799.90
07/15/86	100.19	800.53
08/02/86	98.32	802.40
08/29/86	97.72	803.00
10/09/86	96.52	804.20
11/02/86	97.72	803.00
12/07/86	95.67	805.05
12/10/86	95.21	805.51
04/24/87	96.16	804.56
05/30/87	102.07	798.65
06/27/87	107.59	793.13
07/16/87	108.56	792.16
07/31/87	108.62	792.10
08/29/87	108.62	792.10
09/25/87	108.05	792.67
10/31/87	99.63	801.09
11/29/87	102.01	798.71
12/20/87	101.41	799.31
04/02/88	100.17	800.55
04/30/88	102.19	798.53
05/28/88	105.55	795.17
06/25/88	109.91	790.81
07/12/88	110.27	790.45
07/23/88	111.33	789.39
08/20/88	111.97	788.75
08/26/88	112.36	788.36
09/17/88	112.59	788.13
10/15/88	106.29	794.43
11/06/88	105.54	795.18
12/11/88	104.80	795.92
04/21/89	101.79	798.93
05/13/89	102.05	798.67
06/03/89	102.59	798.13
07/01/89	108.62	792.10
07/30/89	111.47	789.25
09/10/89	105.92	794.80
10/01/89	103.04	797.68
10/29/89	97.92	802.80
11/19/89	92.56	808.16
01/03/90	86.24	814.48
05/05/90	97.15	803.57
05/25/90	97.24	803.48
06/30/90	98.05	802.67
08/04/90	106.27	794.45
09/02/90	111.60	789.12
09/28/90	106.89	793.83
10/09/90	105.70	795.02
10/27/90	103.44	797.28
11/18/90	98.92	801.80
12/09/90	98.45	802.27
03/30/91	99.37	801.35
05/11/91	99.81	800.91
06/02/91	102.42	798.30
07/13/91	101.08	799.64
08/10/91	109.67	791.05
08/31/91	107.30	793.42
09/28/91	108.37	792.35
11/17/91	108.30	792.42
12/21/91	109.16	791.56
04/18/92	107.86	792.86
05/20/92	109.09	791.63
06/13/92	112.20	788.52
07/26/92	108.43	792.29
08/27/92	109.40	791.32
09/26/92	109.53	791.19
10/18/92	109.09	791.63
11/12/92	108.69	792.03
12/05/92	106.15	794.57
05/02/93	103.53	797.19
06/04/93	111.63	789.09
08/06/93	114.34	786.38
08/29/93	116.03	784.69
09/25/93	116.27	784.45
10/18/93	115.55	785.17
11/11/93	111.88	788.84
05/15/94	111.62	789.10
06/11/94	116.57	784.15
07/24/94	115.51	785.21
08/20/94	116.65	784.07
09/25/94	118.45	782.27
10/29/94	119.22	781.50
11/26/94	118.22	782.50
04/30/95	110.78	789.94
05/28/95	113.00	787.72
07/02/95	117.91	782.81
08/05/95	113.80	786.92
09/09/95	112.20	788.52
10/28/95	108.93	791.79
11/21/95	109.25	791.47
06/04/96	100.20	800.52
06/30/96	108.51	792.21
07/29/96	114.41	786.31
08/24/96	116.22	784.50
10/05/96	114.40	786.32

139-049-11AAA
Fargo Aquifer

MP Elev (msl,ft)=901.3
SI (ft.)=0-170

Date	Depth to Water (ft)	WL Elev (msl, ft)
9/17/46	55.30	846.00

139-049-11CBB MP Elev (msl,ft)=902.9
Undefined Aquifer SI (ft.)=377-403

Date	Depth to Water (ft)	WL Elev (msl. ft)	Date	Depth to Water (ft)	WL Elev (msl. ft)	Date	Depth to Water (ft)	WL Elev (msl. ft)	Date	Depth to Water (ft)	WL Elev (msl. ft)
08/27/82	92.50	810.40	11/17/82	93.54	809.36						

139-049-12ACA MP Elev (msl,ft)=900
Undefined Aquifer SI (ft.)=0-175

Date	Depth to Water (ft)	WL Elev (msl. ft)	Date	Depth to Water (ft)	WL Elev (msl. ft)	Date	Depth to Water (ft)	WL Elev (msl. ft)	Date	Depth to Water (ft)	WL Elev (msl. ft)
07/03/40	26.46	873.54	12/28/40	27.19	872.81	10/25/41	34.84	865.16	08/21/42	33.91	866.09
07/08/40	26.27	873.73				11/01/41	34.73	865.27	08/30/42	33.62	866.38
07/09/40	26.90	873.10	01/04/41	27.18	872.82	11/08/41	34.72	865.28	09/06/42	32.43	867.57
07/10/40	26.81	873.19	01/11/41	27.11	872.89	11/15/41	34.39	865.61	09/13/42	32.40	867.60
07/11/40	26.79	873.21	01/18/41	27.12	872.88	11/22/41	34.37	865.63	09/20/42	32.43	867.57
07/12/40	26.84	873.16	01/26/41	27.04	872.96	11/30/41	34.17	865.83	09/27/42	32.28	867.72
07/13/40	26.78	873.22	02/01/41	27.08	872.92	12/06/41	34.06	865.94	10/04/42	32.28	867.72
07/15/40	26.77	873.23	02/08/41	27.05	872.95	12/13/41	33.95	866.05	10/11/42	31.99	868.01
07/17/40	26.61	873.39	02/16/41	26.98	873.02	12/20/41	33.76	866.24	10/17/42	32.01	867.99
07/18/40	26.71	873.29	02/22/41	26.89	873.11				11/12/42	34.37	865.63
07/20/40	26.91	873.09	03/01/41	27.05	872.95	01/04/42	33.69	866.31	11/21/42	33.38	866.62
07/22/40	27.05	872.95	03/09/41	27.09	872.91	01/10/42	33.57	866.43	11/28/42	32.58	867.42
07/24/40	27.11	872.89	03/15/41	27.92	872.08	01/17/42	33.51	866.49	12/04/42	32.70	867.30
07/26/40	27.02	872.98	03/23/41	27.47	872.53	01/24/42	33.44	866.56	12/12/42	32.65	867.35
07/29/40	27.03	872.97	03/29/41	27.66	872.34	01/31/42	33.41	866.59	12/19/42	32.72	867.28
07/31/40	27.00	873.00	04/05/41	28.29	871.71	02/07/42	33.37	866.63	12/26/42	32.61	867.39
08/03/40	27.78	872.22	04/12/41	28.58	871.42	02/21/42	33.26	866.74			
08/10/40	28.30	871.70	04/19/41	27.90	872.10	02/28/42	33.23	866.77	01/02/43	32.68	867.32
08/17/40	28.25	871.75	04/26/41	28.98	871.02	03/07/42	33.13	866.87	01/09/43	32.44	867.56
08/24/40	28.26	871.74	05/03/41	28.94	871.06	03/14/42	33.08	866.92	01/24/43	32.57	867.43
08/31/40	28.25	871.75	05/10/41	28.58	871.42	03/21/42	33.06	866.94	01/30/43	32.57	867.43
09/07/40	28.38	871.62	05/17/41	28.57	871.43	03/28/42	32.88	867.12	02/06/43	32.51	867.49
09/09/40	28.38	871.62	05/24/41	28.77	871.23	04/04/42	32.86	867.14	02/13/43	32.70	867.30
09/10/40	27.97	872.03	05/31/41	28.72	871.28	04/11/42	32.89	867.11	02/20/43	32.58	867.42
09/11/40	27.90	872.10	06/07/41	28.71	871.29	04/18/42	32.91	867.09	02/27/43	32.47	867.53
09/12/40	27.85	872.15	06/14/41	31.02	868.98	04/25/42	32.89	867.11	03/06/43	32.66	867.34
09/13/40	27.85	872.15	06/28/41	31.24	868.76	05/02/42	32.59	867.41	03/13/43	32.50	867.50
09/14/40	27.84	872.16	07/06/41	32.14	867.86	05/09/42	31.58	868.42	03/20/43	32.55	867.45
09/21/40	27.97	872.03	07/13/41	32.73	867.27	05/17/42	31.41	868.59	03/27/43	32.60	867.40
09/28/40	27.96	872.04	07/19/41	33.24	866.76	05/23/42	31.44	868.56	04/02/43	32.41	867.59
10/05/40	27.90	872.10	07/26/41	33.65	866.35	05/31/42	31.45	868.55	04/10/43	31.65	868.35
10/12/40	27.90	872.10	08/02/41	34.39	865.61	06/07/42	30.58	869.42	04/24/43	32.12	867.88
10/19/40	27.83	872.17	08/16/41	34.59	865.41	06/14/42	30.64	869.36	05/01/43	32.36	867.64
10/26/40	27.78	872.22	08/23/41	34.81	865.19	06/21/42	30.99	869.01	05/08/43	32.30	867.70
11/02/40	27.66	872.34	08/30/41	35.07	864.93	06/27/42	31.07	868.93	05/15/43	32.16	867.84
11/09/40	27.37	872.63	09/06/41	35.33	864.67	07/04/42	31.08	868.92	05/22/43	32.44	867.56
11/16/40	27.50	872.50	09/13/41	35.43	864.57	07/12/42	32.32	867.68	05/29/43	32.78	867.22
11/23/40	27.48	872.52	09/20/41	35.60	864.40	07/19/42	32.66	867.34	06/05/43	25.13	874.87
11/30/40	27.41	872.59	09/28/41	35.83	864.17	07/26/42	33.02	866.98	06/12/43	27.28	872.72
12/07/40	27.35	872.65	10/04/41	35.73	864.27	08/02/42	33.30	866.70	06/21/43	28.34	871.66
12/14/40	27.36	872.64	10/11/41	35.44	864.56	08/09/42	33.48	866.52	06/26/43	28.60	871.40
12/21/40	27.30	872.70	10/18/41	35.19	864.81	08/15/42	32.62	867.38			

139-049-12CAD
Fargo Aquifer

MP Elev (msl,ft)=902.8
SI (ft.)=0-140

Date	Depth to Water (ft)	WL Elev (msl, ft)	Date	Depth to Water (ft)	WL Elev (msl, ft)	Date	Depth to Water (ft)	WL Elev (msl, ft)	Date	Depth to Water (ft)	WL Elev (msl, ft)
07/08/40	41.52	861.28	12/21/40	43.47	859.33	10/04/41	37.68	865.12	07/04/42	36.82	865.98
07/09/40	39.80	863.00	12/28/40	39.20	863.60	10/11/41	38.26	864.54	07/12/42	42.67	860.13
07/10/40	38.27	864.53				10/18/41	37.23	865.57	07/19/42	42.59	860.21
07/11/40	39.21	863.59	01/04/41	39.15	863.65	10/25/41	38.02	864.78	07/26/42	43.02	859.78
07/12/40	40.10	862.70	01/11/41	48.16	854.64	11/01/41	39.67	863.13	08/02/42	38.47	864.33
07/13/40	42.11	860.69	01/18/41	34.76	868.04	11/08/41	37.76	865.04	08/08/42	37.28	865.52
07/15/40	40.25	862.55	01/26/41	44.67	858.13	11/15/41	38.38	864.42	08/15/42	39.31	863.49
07/17/40	35.12	867.68	02/01/41	35.62	867.18	11/22/41	37.47	865.33	08/23/42	39.08	863.72
07/18/40	39.76	863.04	02/08/41	38.28	864.52	11/30/41	39.61	863.19	08/30/42	35.24	867.56
07/20/40	42.77	860.03	02/16/41	37.56	865.24	12/06/41	39.19	863.61	09/06/42	37.28	865.52
07/22/40	40.24	862.56	02/22/41	38.96	863.84	12/13/41	36.56	866.24	09/13/42	37.30	865.50
07/24/40	40.50	862.30	03/09/41	37.60	865.20	12/20/41	39.16	863.64	09/20/42	37.11	865.69
07/26/40	38.66	864.14	03/15/41	39.24	863.56	12/28/41	37.45	865.35	09/27/42	38.28	864.52
07/29/40	41.73	861.07	03/23/41	37.73	865.07				10/04/42	40.24	862.56
07/31/40	42.24	860.56	03/29/41	38.33	864.47	01/04/42	38.98	863.82	10/11/42	41.51	861.29
08/03/40	42.16	860.64	04/05/41	36.80	866.00	01/10/42	37.71	865.09	10/17/42	41.21	861.59
08/10/40	39.98	862.82	04/12/41	37.89	864.91	01/17/42	37.93	864.87	10/24/42	45.72	857.08
08/17/40	40.92	861.88	05/03/41	34.31	868.49	01/24/42	37.27	865.53	11/12/42	35.55	867.25
08/24/40	39.36	863.44	05/10/41	35.21	867.59	01/31/42	37.42	865.38	11/21/42	36.58	866.22
08/31/40	38.17	864.63	05/17/41	35.01	867.79	02/07/42	36.37	866.43	11/28/42	36.81	865.99
09/07/40	41.25	861.55	05/24/41	38.28	864.52	02/14/42	40.96	861.84	12/05/42	40.49	862.31
09/14/40	40.55	862.25	05/31/41	34.34	868.46	02/21/42	36.54	866.26	12/12/42	38.67	864.13
09/21/40	43.46	859.34	06/07/41	34.24	868.56	02/28/42	38.07	864.73	12/21/42	34.85	867.95
09/24/40	39.74	863.06	06/14/41	34.59	868.21	03/07/42	36.45	866.35	12/26/42	34.76	868.04
09/25/40	37.69	865.11	06/21/41	39.85	862.95	03/14/42	36.91	865.89			
09/26/40	40.23	862.57	06/28/41	35.69	867.11	03/21/42	37.55	865.25	01/02/43	33.76	869.04
09/27/40	41.41	861.39	07/06/41	37.41	865.39	03/28/42	38.86	863.94	01/09/43	33.75	869.05
09/28/40	42.45	860.35	07/13/41	36.05	866.75	04/04/42	38.89	863.91	01/23/43	33.70	869.10
10/05/40	41.61	861.19	07/19/41	41.23	861.57	04/11/42	36.88	865.92	01/30/43	33.66	869.14
10/12/40	40.95	861.85	07/26/41	36.35	866.45	04/18/42	35.17	867.63	02/06/43	33.58	869.22
10/19/40	43.57	859.23	08/02/41	41.86	860.94	04/25/42	36.02	866.78	02/13/43	33.56	869.24
10/26/40	39.76	863.04	08/09/41	39.43	863.37	05/02/42	35.65	867.15	02/20/43	33.54	869.26
11/02/40	35.75	867.05	08/16/41	37.02	865.78	05/09/42	37.12	865.68	02/27/43	33.57	869.23
11/09/40	38.32	864.48	08/23/41	37.05	865.75	05/17/42	42.59	860.21	03/13/43	33.45	869.35
11/16/40	48.68	854.12	08/30/41	37.33	865.47	05/31/42	37.94	864.86	03/20/43	33.43	869.37
11/23/40	43.73	859.07	09/06/41	37.34	865.46	06/07/42	38.08	864.72	03/27/43	33.41	869.39
11/30/40	35.30	867.50	09/13/41	37.48	865.32	06/14/42	36.22	866.58	04/02/43	33.17	869.63
12/07/40	40.01	862.79	09/20/41	39.01	863.79	06/21/42	35.83	866.97	04/10/43	31.53	871.27
12/14/40	37.40	865.40	09/28/41	38.42	864.38	06/27/42	36.66	866.14	04/17/43	33.26	869.54

139-049-16BAA
West Fargo South Aquifer

MP Elev (msl,ft)=900.03
SI (ft.)=229-232

Date	Depth to Water (ft)	WL Elev (msl, ft)	Date	Depth to Water (ft)	WL Elev (msl, ft)	Date	Depth to Water (ft)	WL Elev (msl, ft)	Date	Depth to Water (ft)	WL Elev (msl, ft)
08/24/82	53.65	846.38	06/02/83	52.59	847.44	07/28/83	65.32	834.71	10/12/83	75.48	824.55
11/17/82	53.29	846.74	06/21/83	53.07	846.96	08/18/83	76.16	823.87	11/08/83	76.93	823.10
			07/11/83	53.82	846.21	09/14/83	75.37	824.66			

139-049-16CDD MP Elev (msl,ft)=905.18

West Fargo South Aquifer SI (ft.)=238-243

Date	Depth to Water (ft)	WL Elev (msl, ft)
07/28/83	69.34	835.84
08/16/83	78.87	826.31
09/14/83	79.66	825.52
10/12/83	79.19	825.99
11/08/83	80.58	824.60
04/11/84	92.07	813.11
05/16/84	93.73	811.45
06/22/84	95.43	809.75
07/12/84	98.87	806.31
08/09/84	104.12	801.06
09/12/84	101.21	803.97
10/09/84	99.10	806.08
10/31/84	98.29	806.89
12/05/84	98.51	806.67
04/09/85	98.52	806.66
05/05/85	91.10	814.08
06/07/85	101.94	803.24
07/08/85	103.96	801.22
08/18/85	100.87	804.31
09/22/85	98.14	807.04
10/25/85	97.78	807.40
12/07/85	97.13	808.05
05/11/86	96.30	808.88
06/08/86	101.35	803.83
07/04/86	103.55	801.63
08/02/86	102.60	802.58
08/30/86	101.33	803.85
10/09/86	100.45	804.73
11/02/86	101.49	803.69
12/07/86	99.47	805.71
04/24/87	101.04	804.14
05/31/87	105.80	799.38
06/27/87	111.61	793.57
07/31/87	112.85	792.33
08/30/87	113.05	792.13
09/25/87	112.30	792.88
10/31/87	103.46	801.72
11/29/87	105.99	799.19
12/20/87	105.35	799.83
04/02/88	104.09	801.09
04/30/88	106.17	799.01
05/28/88	109.75	795.43
06/26/88	114.21	790.97
07/23/88	115.59	789.59
08/20/88	116.25	788.93
09/01/88	117.44	787.74
09/16/88	116.72	788.46
10/15/88	109.91	795.27
11/06/88	109.19	795.99
12/10/88	108.38	796.80
04/22/89	105.29	799.89
05/13/89	105.77	799.41
06/03/89	106.31	798.87
06/30/89	107.93	797.25
07/30/89	115.42	789.76
09/10/89	109.35	795.83
09/30/89	106.58	798.60
10/28/89	101.02	804.16
11/19/89	94.99	810.19
05/05/90	100.50	804.68
05/25/90	101.02	804.16
06/30/90	103.60	801.58
08/03/90	110.11	795.07
09/01/90	115.44	789.74
09/29/90	110.42	794.76
10/28/90	106.36	798.82
11/17/90	102.66	802.52
12/09/90	101.91	803.27
03/29/91	103.14	802.04
06/02/91	106.48	798.70
08/31/91	111.01	794.17
09/29/91	112.13	793.05
10/20/91	114.05	791.13
11/16/91	113.58	791.60
12/20/91	112.70	792.48
05/20/92	112.61	792.57
07/26/92	111.89	793.29
08/27/92	112.85	792.33
09/24/92	113.06	792.12
10/17/92	112.40	792.78
11/11/92	110.03	795.15
12/05/92	109.41	795.77
05/01/93	107.09	798.09
06/04/93	115.60	789.58
08/05/93	118.00	787.18
08/29/93	119.73	785.45
09/25/93	119.94	785.24
10/18/93	119.02	786.16
11/11/93	115.14	790.04
04/16/94	119.29	785.89
05/15/94	120.53	784.65
06/11/94	128.33	776.85
07/24/94	118.43	786.75
08/20/94	127.66	777.52
09/24/94	128.35	776.83
10/28/94	128.79	776.39
11/26/94	126.60	778.58
04/30/95	114.20	790.98
05/28/95	123.26	781.92
07/01/95	124.94	780.24
08/05/95	122.40	782.78
09/09/95	114.70	790.48
10/28/95	111.47	793.71
11/21/95	112.02	793.16
06/04/96	107.57	797.61
06/30/96	122.70	782.48
08/25/96	130.44	774.74
10/05/96	124.41	780.77
11/02/96	126.63	778.55

139-049-17AAD MP Elev (msl,ft)=895

Undefined Aquifer SI (ft.)=298-301

Date	Depth to Water (ft)	WL Elev (msl, ft)
09/08/81	100.04	794.96
08/24/82	101.40	793.60
11/17/82	101.32	793.68
04/18/83	101.72	793.28
05/19/83	101.83	793.17
05/24/83	101.99	793.01
06/02/83	101.89	793.11
06/21/83	102.00	793.00
07/11/83	102.06	792.94
07/28/83	102.11	792.89
08/18/83	102.27	792.73
09/14/83	102.48	792.52
10/12/83	102.45	792.55
11/08/83	102.66	792.34
12/14/83	102.60	792.40
04/11/84	103.07	791.93
05/16/84	103.24	791.76
06/21/84	103.35	791.65
07/12/84	103.53	791.47
08/09/84	103.97	791.03
09/12/84	104.47	790.53
10/09/84	104.78	790.22
10/31/84	104.64	790.36
12/05/84	104.89	790.11
04/09/85	104.93	790.07
05/05/85	105.45	789.55
06/07/85	105.40	789.60
07/08/85	105.86	789.14
08/18/85	105.10	789.90
09/22/85	106.25	788.75
10/25/85	106.40	788.60
12/06/85	106.48	788.52
05/11/86	106.82	788.18
06/06/86	107.00	788.00
07/04/86	107.14	787.86
07/15/86	106.97	788.03
08/02/86	107.42	787.58
08/29/86	107.51	787.49
10/09/86	107.44	787.56
11/02/86	107.70	787.30
12/07/86	107.68	787.32
04/24/87	108.00	787.00
05/31/87	107.94	787.06
06/27/87	108.10	786.90
07/16/87	107.86	787.14
07/31/87	108.13	786.87
08/29/87	108.39	786.61
10/31/87	108.66	786.34
11/29/87	108.76	786.24
12/20/87	108.78	786.22
04/02/88	105.80	789.20
04/30/88	106.73	788.27
05/28/88	106.72	788.28
06/25/88	106.90	788.10
07/12/88	106.86	788.14
07/23/88	106.95	788.05
08/21/88	107.18	787.82
09/01/88	107.17	787.83
09/16/88	110.01	784.99
10/15/88	110.11	784.89
11/06/88	110.26	784.74
12/11/88	110.45	784.55
04/21/89	110.45	784.55
05/13/89	110.59	784.41
06/03/89	110.60	784.40
07/01/89	110.73	784.27
07/30/89	111.07	783.93
09/10/89	111.18	783.82
10/01/89	111.32	783.68
10/29/89	111.42	783.58
11/19/89	111.45	783.55
01/03/90	112.80	782.20
05/05/90	112.11	782.89
05/26/90	112.07	782.93
06/30/90	112.03	782.97
08/04/90	112.28	782.72
09/02/90	112.37	782.63
09/29/90	112.47	782.53
10/09/90	112.49	782.51
10/27/90	112.48	782.52
11/18/90	112.95	782.05
12/09/90	111.52	783.48
03/30/91	112.68	782.32
05/11/91	112.64	782.36
06/02/91	112.62	782.38
07/14/91	112.65	782.35
08/10/91	112.87	782.13
08/31/91	112.95	782.05
09/28/91	112.96	782.04
10/20/91	112.03	782.97
11/16/91	113.02	781.98
12/21/91	112.94	782.06
04/18/92	112.77	782.23
05/20/92	112.82	782.18
06/13/92	112.87	782.13
07/26/92	113.15	781.85
08/27/92	113.22	781.78
09/26/92	113.28	781.72
10/18/92	113.48	781.52
11/12/92	113.48	781.52
12/05/92	113.44	781.56
05/02/93	113.95	781.05
06/04/93	114.00	781.00
08/06/93	113.84	781.16
08/29/93	113.95	781.05
09/25/93	113.95	781.05
10/18/93	114.03	780.97
11/11/93	114.03	780.97
04/17/94	114.32	780.68
05/15/94	114.29	780.71
06/11/94	114.98	780.02
07/24/94	114.31	780.69
07/27/94	114.38	780.62
08/20/94	114.82	780.18
09/25/94	114.79	780.21
10/29/94	116.65	778.35
11/26/94	116.47	778.53
04/30/95	117.00	778.00
05/28/95	117.00	778.00
07/02/95	117.10	777.90
08/05/95	117.21	777.79
09/09/95	117.44	777.56
10/28/95	117.48	777.52
11/21/95	117.64	777.36
06/04/96	118.41	776.59
06/30/96	118.62	776.38
07/29/96	118.76	776.24
08/25/96	118.85	776.15
10/05/96	118.68	776.32

139-049-18BBB MP Elev (msl,ft)=895.7
Undefined Aquifer Sl (ft.)=150-210

Date	Depth to Water (ft)	WL Elev (msl. ft)
08/30/63	61.57	834.13
09/17/63	61.60	834.10
09/24/63	61.63	834.07
10/22/63	61.80	833.90
11/01/63	62.08	833.62
12/02/63	62.28	833.42
01/14/64	62.03	833.67
04/01/64	61.67	834.03
05/06/64	61.31	834.39
05/28/64	61.90	833.80
07/01/64	62.00	833.70
08/01/64	62.28	833.42
09/04/64	62.93	832.77
09/30/64	63.03	832.67
11/02/64	63.22	832.48
12/10/64	63.38	832.32
01/18/65	63.69	832.01
02/15/65	63.63	832.07
03/15/65	63.64	832.06
04/14/65	63.42	832.28
05/10/65	63.67	832.03
06/11/65	63.88	831.82
07/13/65	63.93	831.77
08/03/65	64.16	831.54
09/14/65	64.39	831.31
10/21/65	64.72	830.98
11/16/65	64.74	830.96
12/14/65	64.65	831.05
01/11/66	64.80	830.90
02/08/66	64.73	830.97
03/14/66	64.66	831.04
04/14/66	64.91	830.79
05/10/66	64.91	830.79
06/14/66	64.91	830.79
07/13/66	65.01	830.69
07/22/66	65.17	830.53
08/17/66	65.02	830.68
09/28/66	65.09	830.61
10/26/66	65.31	830.39
12/02/66	65.56	830.14
12/29/66	65.47	830.23
03/31/67	65.56	830.14
04/28/67	65.68	830.02
05/25/67	65.62	830.08
06/22/67	65.81	829.89
07/11/67	66.03	829.67
08/17/67	66.47	829.23
10/13/67	66.58	829.12
11/08/67	66.65	829.05
12/05/67	67.10	828.60
01/23/68	68.08	827.62
04/02/68	67.99	827.71
05/01/68	67.80	827.90
05/28/68	67.73	827.97
06/26/68	67.73	827.97
07/23/68	67.64	828.06
08/21/68	67.73	827.97
09/18/68	67.56	828.14
10/15/68	67.28	828.42
11/13/68	67.60	828.10
12/10/68	67.47	828.23
01/10/69	67.73	827.97
02/13/69	67.50	828.20
03/03/69	67.85	827.85
04/30/69	68.68	827.02
06/02/69	68.70	827.00
06/24/69	68.65	827.05
07/31/69	68.02	827.68
08/20/69	68.35	827.35
09/16/69	68.63	827.07
10/14/69	68.70	827.00
11/14/69	68.68	827.02
12/03/69	68.95	826.75
01/05/70	68.90	826.80
02/06/70	68.97	826.73
03/06/70	68.97	826.73
05/23/70	69.02	826.68
06/23/70	68.97	826.73
07/22/70	69.31	826.39
08/18/70	69.55	826.15
09/15/70	69.49	826.21
10/16/70	69.52	826.18
11/13/70	69.44	826.26
12/01/70	69.00	826.70
01/13/71	69.28	826.42
02/11/71	69.20	826.50
03/09/71	69.31	826.39
04/03/71	69.43	826.27
04/29/71	69.38	826.32
06/07/71	69.08	826.62
07/09/71	69.06	826.64
08/04/71	69.64	826.06
08/31/71	69.53	826.17
10/05/71	69.56	826.14
11/02/71	69.35	826.35
11/30/71	69.68	826.02
01/04/72	69.65	826.05
02/09/72	69.99	825.71
04/13/72	70.57	825.13
05/02/72	69.83	825.87
06/06/72	69.90	825.80
07/06/72	70.08	825.62
08/09/72	70.07	825.63
09/05/72	69.67	826.03
10/04/72	70.09	825.61
11/01/72	70.22	825.48
12/07/72	70.68	825.02
03/01/73	70.40	825.30
04/03/73	70.20	825.50
05/01/73	70.06	825.64
06/11/73	70.00	825.70
07/11/73	70.27	825.43
08/08/73	70.25	825.45
08/28/73	70.36	825.34
10/04/73	70.42	825.28
11/06/73	70.51	825.19
12/05/73	70.21	825.49
01/10/74	70.30	825.40
02/12/74	69.89	825.81
03/13/74	70.11	825.59
04/02/74	69.86	825.84
06/04/74	70.21	825.49
09/10/74	70.57	825.13
12/02/74	70.64	825.06
03/19/75	70.19	825.51
06/16/75	70.07	825.63
09/16/75	70.44	825.26
12/04/75	70.16	825.54
03/10/76	70.39	825.31
06/01/76	70.48	825.22
09/10/76	71.63	824.07
11/29/76	71.61	824.09
03/09/77	70.85	824.85
06/13/77	71.30	824.40
09/19/77	71.52	824.18
12/01/77	71.05	824.65
03/14/78	71.08	824.62
06/19/78	70.90	824.80
09/20/78	71.40	824.30
11/20/78	70.70	825.00
03/20/79	70.29	825.41
06/18/79	70.43	825.27
09/17/79	70.43	825.27
11/27/79	70.19	825.51
03/21/80	69.85	825.85
05/22/80	70.09	825.61
06/21/80	70.29	825.41
07/15/80	70.07	825.63
08/12/80	70.65	825.05
09/09/80	70.77	824.93
10/08/80	70.64	825.06
11/17/80	70.85	824.85
02/23/81	70.48	825.22
04/27/81	70.66	825.04
06/09/81	70.62	825.08
07/22/81	71.12	824.58
09/02/81	71.08	824.62
09/08/81	71.09	824.61
10/07/81	69.82	825.88
12/03/81	70.87	824.83
05/20/82	70.93	824.77
06/30/82	71.28	824.42
08/23/82	71.67	824.03
08/24/82	71.53	824.17
10/30/82	71.50	824.20
11/17/82	71.51	824.19
11/21/82	71.37	824.33
04/18/83	71.29	824.41
05/24/83	71.28	824.42
06/02/83	71.17	824.53
06/22/83	71.37	824.33
07/26/83	71.53	824.17
08/18/83	71.60	824.10
10/12/83	71.90	823.80
12/14/83	71.94	823.76
04/11/84	72.16	823.54
05/16/84	72.38	823.32
06/21/84	72.49	823.21
08/08/84	72.88	822.82
09/12/84	73.24	822.46
10/09/84	73.66	822.04
10/31/84	73.46	822.24
12/05/84	73.60	822.10
04/09/85	73.52	822.18
05/05/85	73.37	822.33
06/07/85	72.60	823.10
07/08/85	73.57	822.13
08/18/85	73.83	821.87
09/22/85	73.95	821.75
10/25/85	73.79	821.91
12/07/85	73.83	821.87
05/11/86	73.62	822.08
06/06/86	73.65	822.05
07/04/86	73.68	822.02
07/15/86	73.73	821.97
08/01/86	73.90	821.80
08/29/86	74.08	821.62
10/09/86	73.91	821.79
11/02/86	74.33	821.37
12/07/86	74.21	821.49
12/10/86	74.05	821.65
04/25/87	74.03	821.67
05/31/87	73.97	821.73
06/27/87	74.19	821.51
07/16/87	74.03	821.67
07/31/87	74.25	821.45
08/30/87	74.68	821.02
09/25/87	74.66	821.04
10/31/87	74.82	820.88
11/29/87	74.72	820.98
12/20/87	74.45	821.25
04/02/88	74.55	821.15
04/29/88	74.54	821.16
05/28/88	74.51	821.19
06/24/88	74.76	820.94
07/12/88	75.01	820.69
07/23/88	75.27	820.43
08/21/88	75.27	820.43
09/16/88	75.45	820.25
09/20/88	75.50	820.20
10/15/88	75.52	820.18
11/05/88	75.59	820.11
12/11/88	75.90	819.80
04/21/89	75.68	820.02
05/13/89	75.75	819.95
06/03/89	75.70	820.00
07/01/89	75.82	819.88
07/30/89	76.20	819.50
09/09/89	76.44	819.26
10/01/89	76.23	819.47
10/28/89	76.51	819.19
11/19/89	76.42	819.28
01/03/90	76.58	819.12
05/05/90	76.49	819.21
05/25/90	76.42	819.28
06/29/90	76.39	819.31
08/04/90	76.73	818.97
09/02/90	76.90	818.80
09/29/90	77.05	818.65
10/09/90	77.00	818.70
10/26/90	76.71	818.99
11/18/90	76.83	818.87
12/09/90	76.89	818.81
03/30/91	76.78	818.92
05/11/91	76.81	818.89
06/01/91	76.65	819.05
07/13/91	76.94	818.76
08/10/91	77.03	818.67
08/31/91	77.09	818.61
09/28/91	77.09	818.61
10/20/91	77.12	818.58
11/16/91	77.29	818.41
12/21/91	77.28	818.42
04/18/92	77.01	818.69
05/20/92	77.17	818.53
06/13/92	77.19	818.51
07/26/92	77.25	818.45
08/27/92	77.31	818.39
09/24/92	77.09	818.61
10/18/92	77.59	818.11
11/12/92	77.45	818.25
12/05/92	77.37	818.33
05/01/93	77.39	818.31
06/04/93	77.25	818.45
08/06/93	77.05	818.65
08/29/93	77.33	818.37
09/25/93	77.27	818.43
10/18/93	77.42	818.28
11/11/93	77.48	818.22
04/17/94	77.71	817.99
05/15/94	77.65	818.05
06/11/94	77.59	818.11
07/24/94	77.84	817.86
07/27/94	77.86	817.84
08/20/94	77.89	817.81
09/25/94	77.95	817.75
10/28/94	77.52	818.18
11/26/94	77.91	817.79
04/30/95	78.15	817.55
05/28/95	78.01	817.69
07/02/95	78.02	817.68
08/05/95	78.12	817.58
09/09/95	78.41	817.29
10/27/95	77.92	817.78
11/21/95	78.39	817.31
06/04/96	78.19	817.51
06/30/96	78.33	817.37

139-049-18BBB **(Continued)** MP Elev (msl,ft)=895.7
Undefined Aquifer Sl (ft.)=150-210

Date	Depth to Water (ft)	WL Elev (msl. ft)

07/29/96	78.34	817.36	08/25/96	78.51	817.19	10/05/96	78.47	817.23	11/02/96	78.56	817.14

139-049-21AAA1
Dakota Group Aquifer

MP Elev (msl,ft)=911.1
SI (ft.)=265-268

Date	Depth to Water (ft)	WL Elev (msl, ft)	Date	Depth to Water (ft)	WL Elev (msl, ft)	Date	Depth to Water (ft)	WL Elev (msl, ft)	Date	Depth to Water (ft)	WL Elev (msl, ft)
06/14/83	14.81	896.29	12/07/85	27.98	883.12	09/09/89	117.91	793.19	12/05/92	115.38	795.72
06/15/83	14.93	896.17				09/30/89	114.72	796.38			
06/16/83	15.13	895.97	05/10/86	30.27	880.83	10/28/89	111.10	800.00	05/01/93	112.48	798.62
06/17/83	15.19	895.91	06/08/86	30.63	880.47	11/19/89	104.49	806.61	06/05/93	120.66	790.44
06/20/83	15.38	895.72	07/03/86	30.90	880.20				08/05/93	123.30	787.80
06/24/83	15.57	895.53	08/01/86	31.27	879.83	05/05/90	105.30	805.80	09/25/93	125.53	785.57
06/27/83	15.70	895.40	08/30/86	31.63	879.47	05/28/90	106.65	804.45	10/18/93	124.80	786.30
06/28/83	15.73	895.37	10/10/86	31.94	879.16	06/29/90	107.45	803.65	11/11/93	121.53	789.57
07/11/83	16.16	894.94	11/01/86	32.33	878.77	08/03/90	110.27	800.83			
07/28/83	16.69	894.41	12/06/86	32.75	878.35	09/01/90	118.99	792.11	04/16/94	120.63	790.47
08/18/83	17.17	893.93				09/29/90	117.47	793.63	05/15/94	120.66	790.44
09/14/83	17.76	893.34	04/25/87	34.30	876.80	10/27/90	113.28	797.82	06/11/94	125.74	785.36
09/29/83	17.99	893.11	05/30/87	34.75	876.35	11/17/90	110.07	801.03	07/24/94	124.12	786.98
10/12/83	18.25	892.85	06/27/87	35.04	876.06	12/08/90	108.43	802.67	08/20/94	126.00	785.10
11/08/83	18.68	892.42	08/01/87	35.46	875.64				09/24/94	127.10	784.00
12/14/83	19.28	891.82	08/29/87	35.76	875.34	03/29/91	109.49	801.61	10/28/94	127.82	783.28
			09/26/87	36.37	874.73	05/10/91	108.99	802.11	11/26/94	127.66	783.44
04/11/84	20.85	890.25	10/31/87	36.70	874.40	06/01/91	110.11	800.99			
05/16/84	21.32	889.78	11/18/87	37.08	874.02	07/13/91	110.76	800.34	04/30/95	119.38	791.72
06/21/84	21.75	889.35	12/19/87	37.25	873.85	08/10/91	117.43	793.67	05/28/95	121.86	789.24
07/12/84	22.05	889.05				08/31/91	116.63	794.47	07/01/95	127.79	783.31
08/09/84	22.39	888.71	04/02/88	38.49	872.61	09/28/91	117.02	794.08	08/05/95	122.19	788.91
09/12/84	22.86	888.24	04/30/88	38.80	872.30	10/20/91	119.42	791.68	09/09/95	121.32	789.78
10/10/84	23.22	887.88	05/27/88	39.40	871.70	11/17/91	119.43	791.67	10/28/95	117.26	793.84
10/31/84	23.47	887.63	06/24/88	39.62	871.48	12/20/91	118.15	792.95	11/21/95	117.73	793.37
12/05/84	23.94	887.16	10/15/88	116.93	794.17						
			11/05/88	115.40	795.70	04/17/92	117.27	793.83	06/04/96	109.43	801.67
04/10/85	25.48	885.62	12/10/88	108.48	802.62	05/20/92	118.69	792.41	06/30/96	117.74	793.36
05/05/85	25.78	885.32				06/13/92	120.81	790.29	07/28/96	124.30	786.80
06/08/85	25.52	885.58	04/22/89	113.02	798.08	07/26/92	117.83	793.27	08/24/96	125.68	785.42
07/08/85	26.58	884.52	05/12/89	112.90	798.20	08/27/92	118.69	792.41	10/05/96	124.09	787.01
08/17/85	27.12	883.98	06/03/89	112.87	798.23	09/24/92	119.09	792.01	11/02/96	125.07	786.03
09/22/85	27.57	883.53	06/30/89	113.75	797.35	10/17/92	118.12	792.98			
10/26/85	27.97	883.13	07/30/89	118.70	792.40	11/11/92	116.42	794.68			

139-049-21AAA2
Dakota Group Aquifer

MP Elev (msl,ft)=911.1
SI (ft.)=232-235

Date	Depth to Water (ft)	WL Elev (msl. ft)
06/14/83	64.43	846.67
06/15/83	64.53	846.57
06/16/83	64.62	846.48
06/17/83	64.65	846.45
06/20/83	64.72	846.38
07/11/83	65.44	845.66
07/28/83	74.09	837.01
08/18/83	82.62	828.48
09/14/83	84.08	827.02
09/29/83	84.30	826.80
10/12/83	84.22	826.88
11/08/83	85.87	825.23
12/14/83	85.77	825.33
04/11/84	96.89	814.21
05/16/84	98.64	812.46
06/21/84	100.55	810.55
07/12/84	103.10	808.00
08/09/84	108.16	802.94
09/12/84	107.13	803.97
10/10/84	104.47	806.63
10/31/84	103.57	807.53
12/05/84	103.86	807.24
04/10/85	103.17	807.93
05/05/85	95.30	815.80
06/08/85	106.44	804.66
07/08/85	107.58	803.52
08/17/85	106.66	804.44
09/22/85	103.69	807.41
10/26/85	103.29	807.81
12/07/85	102.66	808.44
05/10/86	101.90	809.20
06/06/86	105.92	805.18
07/03/86	109.13	801.97
08/01/86	109.65	801.45
08/30/86	106.89	804.21
10/10/86	106.17	804.93
11/01/86	106.89	804.21
12/06/86	104.98	806.12
04/25/87	105.34	805.76
05/30/87	110.89	800.21
06/27/87	116.09	795.01
08/01/87	117.45	793.65
08/29/87	117.95	793.15
09/26/87	117.31	793.79
10/31/87	108.63	802.47
11/28/87	111.24	799.86
12/19/87	111.30	799.80
04/02/88	109.93	801.17
04/30/88	111.30	799.80
05/27/88	114.19	796.91
06/24/88	118.74	792.36
07/22/88	120.63	790.47
08/20/88	121.40	789.70
09/17/88	122.24	788.86
10/15/88	116.09	795.01
11/05/88	115.06	796.04
12/10/88	109.50	801.60
04/22/89	111.20	799.90
05/12/89	111.09	800.01
06/03/89	111.76	799.34
06/30/89	117.30	793.80
07/30/89	120.80	790.30
09/09/89	115.69	795.41
09/30/89	112.75	798.35
10/28/89	108.37	802.73
11/19/89	102.03	809.07
05/05/90	106.73	804.37
05/28/90	106.80	804.30
06/29/90	109.18	801.92
08/03/90	114.49	796.61
09/01/90	120.19	790.91
09/29/90	116.63	794.47
10/27/90	112.97	798.13
11/17/90	109.14	801.96
12/08/90	108.00	803.10
03/29/91	108.77	802.33
05/10/91	109.09	802.01
06/01/91	111.53	799.57
07/13/91	110.58	800.52
08/10/91	118.38	792.72
08/31/91	116.73	794.37
09/28/91	117.43	793.67
10/20/91	119.59	791.51
11/17/91	119.36	791.74
12/20/91	118.38	792.72
04/17/92	117.28	793.82
05/20/92	118.66	792.44
06/13/92	120.90	790.20
07/26/92	117.80	793.30
08/27/92	118.70	792.40
09/24/92	119.09	792.01
10/17/92	118.16	792.94
11/11/92	116.33	794.77
12/05/92	115.39	795.71
05/01/93	112.54	798.56
06/05/93	120.70	790.40
08/05/93	123.34	787.76
08/28/93	124.90	786.20
09/25/93	125.52	785.58
10/18/93	124.55	786.55
11/11/93	121.54	789.56
04/16/94	120.66	790.44
05/15/94	120.67	790.43
06/11/94	125.80	785.30
07/24/94	124.10	787.00
08/20/94	125.97	785.13
09/24/94	127.15	783.95
10/28/94	127.94	783.16
11/26/94	127.75	783.35
04/30/95	118.53	792.57
05/28/95	121.89	789.21
07/01/95	127.79	783.31
08/05/95	122.25	788.85
09/09/95	121.35	789.75
10/28/95	117.32	793.78
11/21/95	117.18	793.92
06/04/96	109.10	802.00
06/30/96	117.82	793.28
07/28/96	124.32	786.78
08/24/96	125.78	785.32
10/05/96	124.05	787.05
11/02/96	125.12	785.98

139-049-21AAA3
Dakota Group Aquifer

MP Elev (msl,ft)=911.4
SI (ft.)=244-249

Date	Depth to Water (ft)	WL Elev (msl. ft)
06/10/83	65.78	845.62
06/14/83	66.21	845.19
06/15/83	66.05	845.35
06/16/83	65.20	846.20
06/17/83	65.10	846.30
06/20/83	65.05	846.35
07/11/83	65.75	845.65
07/28/83	74.40	837.00
08/18/83	83.07	828.33
09/14/83	84.30	827.10
09/29/83	84.56	826.84
10/12/83	84.48	826.92
11/08/83	86.06	825.34
12/14/83	86.77	824.63
04/11/84	97.15	814.25
05/16/84	98.90	812.50
06/21/84	100.77	810.63
07/12/84	103.37	808.03
08/09/84	108.48	802.92
09/12/84	107.23	804.17
10/10/84	104.70	806.70
10/31/84	103.79	807.61
12/05/84	104.09	807.31
04/10/85	103.39	808.01
05/05/85	95.25	816.15
06/08/85	106.73	804.67
07/08/85	107.95	803.45
08/17/85	106.85	804.55
09/22/85	104.02	807.38
10/26/85	103.60	807.80
12/07/85	102.87	808.53
05/10/86	102.25	809.15
06/08/86	106.25	805.15
07/03/86	109.39	802.01
08/01/86	107.74	803.66
08/30/86	107.18	804.22
10/10/86	106.53	804.87
11/01/86	107.55	803.85
12/06/86	105.27	806.13
04/25/87	105.65	805.75
05/30/87	111.02	800.38
06/27/87	117.38	794.02
08/01/87	117.85	793.55
08/29/87	118.23	793.17
09/26/87	117.45	793.95
10/31/87	108.91	802.49
11/28/87	111.54	799.86
12/19/87	111.60	799.80
04/02/88	110.03	801.37
04/30/88	111.60	799.80
05/27/88	114.48	796.92
06/24/88	119.00	792.40
07/22/88	120.85	790.55
08/20/88	121.66	789.74
09/17/88	122.49	788.91
10/15/88	116.41	794.99
11/05/88	115.36	796.04
12/10/88	114.50	796.90
04/22/89	111.55	799.85
05/12/89	111.00	800.40
06/03/89	112.19	799.21
06/30/89	117.75	793.65
07/30/89	120.94	790.46
09/09/89	116.09	795.31
09/30/89	113.09	798.31
10/28/89	108.85	802.55
11/19/89	102.49	808.91
05/05/90	107.13	804.27
05/28/90	107.16	804.24
06/29/90	109.47	801.93
08/03/90	114.74	796.66
09/01/90	120.46	790.94
09/29/90	117.04	794.36
10/27/90	113.39	798.01
11/17/90	109.53	801.87
12/08/90	108.46	802.94
03/29/91	108.91	802.49
05/10/91	109.44	801.96
06/01/91	111.87	799.53
07/13/91	110.94	800.46
08/10/91	118.66	792.74
08/31/91	117.04	794.36
09/28/91	117.71	793.69
10/20/91	119.89	791.51
11/17/91	119.64	791.76
12/20/91	118.81	792.59
04/17/92	117.60	793.80
05/20/92	118.96	792.44
06/13/92	121.18	790.22
07/26/92	118.08	793.32
08/27/92	118.99	792.41
09/24/92	119.37	792.03
10/17/92	118.41	792.99
11/11/92	116.60	794.80
12/05/92	115.67	795.73
05/01/93	112.85	798.55
06/05/93	120.87	790.53
08/05/93	123.55	787.85
08/28/93	125.12	786.28
09/25/93	125.75	785.65
10/18/93	125.05	786.35
11/11/93	121.83	789.57
04/16/94	120.99	790.41
05/15/94	120.99	790.41
06/11/94	126.02	785.38
07/24/94	124.40	787.00
08/20/94	126.20	785.20
09/24/94	127.38	784.02
10/28/94	128.20	783.20
11/26/94	128.06	783.34
04/30/95	120.70	790.70
05/28/95	122.24	789.16
07/01/95	128.08	783.32
08/05/95	122.55	788.85
09/09/95	121.68	789.72
10/28/95	117.70	793.70
11/21/95	118.10	793.30
06/04/96	109.67	801.73
06/30/96	118.11	793.29
07/28/96	124.58	786.82
08/24/96	125.98	785.42
10/05/96	124.44	786.96
11/02/96	125.39	786.01

139-049-21AAA4 MP Elev (msl,ft)=911.3

Till Aquifer Sl (ft.)=72-75

Date	Depth to Water (ft)	WL Elev (msl, ft)
06/10/83	19.28	892.02
06/14/83	22.90	888.40
06/15/83	23.14	888.16
06/16/83	23.23	888.07
06/17/83	23.29	888.01
06/20/83	23.54	887.76
06/28/83	24.02	887.28
07/11/83	24.73	886.57
07/28/83	25.63	885.67
08/18/83	26.46	884.84
09/14/83	27.36	883.94
09/29/83	27.72	883.58
10/12/83	28.00	883.30
11/08/83	28.42	882.88
12/14/83	28.84	882.46
04/11/84	28.76	882.54
05/16/84	28.68	882.62
06/21/84	27.95	883.35
07/12/84	28.35	882.95
08/09/84	28.74	882.56
09/12/84	29.07	882.23
10/10/84	29.18	882.12
10/31/84	28.26	883.04
12/05/84	28.74	882.56
04/10/85	29.34	881.96
05/05/85	29.39	881.91
06/08/85	28.85	882.45
07/08/85	29.04	882.26
08/17/85	29.07	882.23
09/22/85	29.53	881.77
10/26/85	29.99	881.31
12/07/85	29.98	881.32
05/10/86	29.65	881.65
06/08/86	30.02	881.28
07/03/86	30.03	881.27
08/01/86	30.03	881.27
08/30/86	30.37	880.93
10/10/86	30.34	880.96
11/01/86	30.55	880.75
12/06/86	30.80	880.50
04/25/87	31.03	880.27
05/30/87	30.84	880.46
06/27/87	31.13	880.17
08/01/87	31.22	880.08
08/29/87	31.40	879.90
09/26/87	31.69	879.61
10/31/87	31.85	879.45
11/28/87	31.94	879.36
12/19/87	31.88	879.42
04/02/88	31.78	879.52
04/30/88	31.85	879.45
05/27/88	31.95	879.35
06/24/88	32.15	879.15
07/22/88	32.38	878.92
08/20/88	32.44	878.86
09/17/88	32.59	878.71
10/15/88	32.54	878.76
11/05/88	32.60	878.70
12/10/88	32.62	878.68
04/22/89	32.60	878.70
05/12/89	32.73	878.57
06/03/89	32.92	878.38
06/30/89	33.00	878.30
07/30/89	33.04	878.26
09/09/89	33.08	878.22
09/30/89	33.26	878.04
10/28/89	33.41	877.89
11/19/89	33.40	877.90
05/05/90	33.63	877.67
05/28/90	33.66	877.64
06/29/90	33.66	877.64
08/03/90	33.88	877.42
09/01/90	34.03	877.27
09/29/90	34.07	877.23
10/27/90	34.09	877.21
11/17/90	34.12	877.18
12/08/90	34.15	877.15
03/29/91	34.01	877.29
05/10/91	33.90	877.40
06/01/91	34.06	877.24
07/13/91	33.85	877.45
08/10/91	34.13	877.17
08/31/91	34.24	877.06
09/28/91	34.29	877.01
10/20/91	34.25	877.05
11/17/91	34.33	876.97
12/20/91	35.33	875.97
04/17/92	34.47	876.83
05/20/92	34.47	876.83
06/13/92	34.56	876.74
07/26/92	34.50	876.80
08/27/92	34.58	876.72
09/24/92	34.59	876.71
10/17/92	34.80	876.50
11/11/92	34.83	876.47
12/05/92	34.78	876.52
05/01/93	34.87	876.43
06/05/93	35.82	875.48
08/05/93	34.73	876.57
08/28/93	34.17	877.13
09/25/93	34.04	877.26
10/18/93	34.03	877.27
11/11/93	34.12	877.18
04/16/94	33.64	877.66
05/15/94	32.88	878.42
06/11/94	33.56	877.74
07/24/94	32.70	878.60
08/20/94	33.09	878.21
09/24/94	33.55	877.75
10/28/94	33.47	877.83
11/26/94	33.68	877.62
04/30/95	34.18	877.12
05/28/95	34.00	877.30
07/01/95	34.29	877.01
08/05/95	34.27	877.03
09/09/95	34.46	876.84
10/28/95	34.43	876.87
11/21/95	34.45	876.85
06/04/96	34.50	876.80
06/30/96	34.70	876.60
07/28/96	34.92	876.38
08/24/96	34.88	876.42
10/05/96	34.91	876.39

139-049-21AAA5 MP Elev (msl,ft)=911.2

Till Aquifer Sl (ft.)=102-105

Date	Depth to Water (ft)	WL Elev (msl, ft)
06/15/83	4.01	907.19
06/16/83	4.15	907.05
06/17/83	4.30	906.90
06/20/83	4.48	906.72
06/28/83	4.81	906.39
07/11/83	5.34	905.86
07/28/83	5.88	905.32
08/18/83	6.40	904.80
09/14/83	7.05	904.15
09/29/83	7.26	903.94
10/12/83	7.48	903.72
11/08/83	8.13	903.07
12/14/83	8.92	902.28
04/11/84	11.16	900.04
05/16/84	11.56	899.64
06/21/84	11.45	899.75
07/12/84	11.80	899.40
08/09/84	12.25	898.95
09/12/84	13.16	898.04
10/10/84	13.45	897.75
10/31/84	12.67	898.53
12/05/84	13.42	897.78
04/10/85	15.17	896.03
05/05/85	16.12	895.08
06/08/85	15.87	895.33
07/08/85	16.14	895.06
08/15/85	16.36	894.84
09/22/85	16.69	894.51
10/26/85	17.13	894.07
12/07/85	16.85	894.35
05/10/86	19.18	892.02
06/08/86	20.57	890.63
07/03/86	19.73	891.47
08/01/86	19.49	891.71
08/30/86	19.85	891.35
10/10/86	20.34	890.86
11/01/86	23.70	887.50
12/06/86	25.85	885.35
08/29/87	35.20	876.00
09/26/87	36.03	875.17
10/31/87	37.24	873.96
11/28/87	38.01	873.19
12/19/87	38.57	872.63
04/30/88	41.00	870.20
05/27/88	41.54	869.66
06/24/88	42.03	869.17
07/22/88	43.43	867.77
08/20/88	43.95	867.25
09/17/88	44.55	866.65
10/15/88	44.60	866.60
11/05/88	45.27	865.93
12/10/88	45.85	865.35
04/22/89	47.73	863.47
05/12/89	48.29	862.91
06/03/89	48.43	862.77
06/30/89	48.62	862.58
07/30/89	48.99	862.21
09/09/89	49.88	861.32
09/30/89	49.04	862.16
10/28/89	49.45	861.75
11/19/89	49.74	861.46
05/05/90	51.13	860.07
05/28/90	51.18	860.02
06/29/90	50.74	860.46
08/03/90	51.00	860.20
09/01/90	51.17	860.03
09/29/90	51.37	859.83
10/27/90	51.53	859.67
11/17/90	51.66	859.54
12/08/90	51.93	859.27
03/29/91	52.67	858.53
05/10/91	52.59	858.61
06/01/91	52.74	858.46
07/13/91	52.33	858.87
08/10/91	52.34	858.86
08/31/91	52.45	858.75
09/28/91	52.55	858.65
10/20/91	52.77	858.43
11/17/91	53.00	858.20
12/20/91	52.32	858.88
04/17/92	54.13	857.07
05/20/92	54.37	856.83
06/13/92	54.42	856.78
07/26/92	54.12	857.08
08/27/92	55.07	856.13
09/24/92	55.07	856.13
10/17/92	55.19	856.01
11/11/92	55.34	855.86
12/05/92	55.51	855.69
05/01/93	56.28	854.92
06/05/93	56.19	855.01
08/05/93	55.37	855.83
08/28/93	55.48	855.72
09/25/93	55.72	855.48
10/18/93	55.83	855.37
11/11/93	56.07	855.13
04/16/94	57.00	854.20
05/15/94	57.10	854.10
06/11/94	57.27	853.93
07/24/94	56.30	854.90
08/20/94	56.71	854.49
09/24/94	56.66	854.54
10/28/94	56.55	854.65
11/26/94	56.72	854.48
04/30/95	57.56	853.64
05/28/95	57.54	853.66
07/01/95	57.60	853.60
08/05/95	57.19	854.01
09/09/95	57.25	853.95
10/28/95	57.17	854.03
11/21/95	57.33	853.87
06/04/96	57.90	853.30
06/30/96	59.38	851.82
07/28/96	59.44	851.76
08/24/96	59.23	851.97
10/05/96	59.13	852.07
11/02/96	59.23	851.97

139-049-21AAA6
Lake Clay Sed. Aquifer

MP Elev (msl,ft)=910.6
SI (ft.)=43-48

Date	Depth to Water (ft)	WL Elev (msl. ft)
06/16/83	20.72	889.88
06/20/83	20.71	889.89
06/27/83	20.75	889.85
06/28/83	20.73	889.87
07/11/83	20.66	889.94
07/28/83	20.61	889.99
08/18/83	20.67	889.93
09/14/83	20.71	889.89
09/29/83	20.74	889.86
10/12/83	20.67	889.93
11/08/83	20.71	889.89
12/14/83	20.75	889.85
04/11/84	20.30	890.30
05/16/84	20.16	890.44
06/21/84	19.30	891.30
07/12/84	19.47	891.13
08/09/84	19.72	890.88
09/12/84	19.82	890.78
10/10/84	20.00	890.60
10/31/84	18.52	892.08
12/05/84	18.96	891.64
04/10/85	19.72	890.88
05/05/85	19.85	890.75
06/08/85	18.05	892.55
07/08/85	18.40	892.20
08/17/85	18.87	891.73
09/22/85	18.91	891.69
10/26/85	19.26	891.34
12/07/85	19.66	890.94
05/10/86	16.62	893.98
06/08/86	17.95	892.65
07/03/86	17.00	893.60
08/01/86	17.32	893.28
08/30/86	18.04	892.56
10/10/86	18.10	892.50
11/01/86	18.71	891.89
12/06/86	18.95	891.65
04/25/87	19.56	891.04
05/30/87	18.80	891.80
06/27/87	17.90	892.70
08/01/87	18.03	892.57
08/29/87	18.16	892.44
09/26/87	18.51	892.09
10/31/87	19.02	891.58
11/28/87	19.22	891.38
12/19/87	19.40	891.20
04/02/88	19.37	891.23
04/30/88	19.50	891.10
05/27/88	19.74	890.86
06/24/88	19.82	890.78
07/22/88	20.02	890.58
08/20/88	20.02	890.58
09/14/88	20.12	890.48
09/17/88	20.05	890.55
10/15/88	19.85	890.75
11/05/88	19.77	890.83
12/10/88	20.14	890.46
04/22/89	19.83	890.77
05/12/89	20.03	890.57
06/03/89	19.82	890.78
06/30/89	20.00	890.60
07/30/89	20.21	890.39
09/09/89	19.84	890.76
09/30/89	19.93	890.67
10/28/89	20.20	890.40
11/19/89	20.23	890.37
05/05/90	20.54	890.06
05/28/90	20.45	890.15
06/29/90	19.28	891.32
08/03/90	19.58	891.02
09/01/90	19.86	890.74
09/29/90	19.98	890.62
10/27/90	20.05	890.55
11/17/90	20.10	890.50
12/08/90	20.28	890.32
03/29/91	20.63	889.97
05/10/91	20.08	890.52
06/01/91	20.20	890.40

139-049-21DCD
West Fargo South Aquifer

MP Elev (msl,ft)=909.65
SI (ft.)=191-197

Date	Depth to Water (ft)	WL Elev (msl. ft)
09/08/81	59.72	849.93
08/24/82	60.83	848.82
11/17/82	60.38	849.27
03/17/83	60.62	849.03
04/18/83	60.29	849.36
05/19/83	60.32	849.33
05/24/83	60.37	849.28
06/02/83	60.40	849.25
06/21/83	60.73	848.92
07/11/83	61.28	848.37
07/28/83	67.14	842.51
08/18/83	71.83	837.82
09/14/83	73.76	835.89
10/12/83	74.42	835.23
11/08/83	75.71	833.94
12/14/83	76.50	833.15
04/11/84	83.89	825.76
05/16/84	85.52	824.13
06/21/84	84.25	825.40
07/12/84	88.91	820.74
08/09/84	92.47	817.18
09/12/84	93.00	816.65
10/10/84	91.46	818.19
10/31/84	90.60	819.05
12/05/84	90.75	818.90
04/10/85	89.98	819.67
05/05/85	85.81	823.84
06/08/85	91.70	817.95
07/08/85	92.90	816.75
08/17/85	93.48	816.17
09/22/85	91.59	818.06
10/26/85	91.04	818.61
12/07/85	90.54	819.11
05/10/86	89.90	819.75
06/08/86	92.25	817.40
07/03/86	94.43	815.22
08/01/86	94.17	815.48
08/30/86	93.90	815.75
10/10/86	93.56	816.09
11/01/86	93.95	815.70
12/06/86	93.02	816.63
04/25/87	92.19	817.46
05/30/87	94.97	814.68
06/27/87	99.34	810.31
08/01/87	100.91	808.74
08/29/87	101.65	808.00
09/26/87	101.63	808.02
10/31/87	98.39	811.26
11/28/87	97.65	812.00
12/19/87	97.70	811.95
04/02/88	97.23	812.42
04/30/88	97.17	812.48
05/27/88	99.04	810.61
06/24/88	102.04	807.61
07/22/88	103.68	805.97
08/20/88	104.54	805.11
09/01/88	104.98	804.67
09/17/88	105.30	804.35
10/15/88	102.26	807.39
11/05/88	101.39	808.26
12/10/88	100.63	809.02
04/22/89	98.19	811.46
05/12/89	98.08	811.57
06/03/89	98.54	811.11
06/30/89	100.95	808.70
07/30/89	103.89	805.76
09/09/89	102.20	807.45
09/30/89	100.35	809.30
04/25/90	94.56	815.09
04/26/90	94.65	815.00
05/05/90	94.80	814.85
05/28/90	95.05	814.60
06/29/90	96.24	813.41
08/03/90	99.28	810.37
09/01/90	103.30	806.35
09/29/90	102.35	807.30
10/27/90	100.32	809.33
11/17/90	99.06	810.59
12/08/90	97.25	812.40
03/29/91	97.12	812.53
05/10/91	96.92	812.73
06/01/91	98.18	811.47
07/13/91	98.29	811.36
08/10/91	101.99	807.66
08/31/91	102.06	807.59
09/28/91	102.46	807.19
10/20/91	103.77	805.88
11/17/91	104.02	805.63
12/20/91	103.65	806.00
04/17/92	102.86	806.79
05/20/92	103.80	805.85
06/13/92	104.93	804.72
07/26/92	103.75	805.90
08/27/92	104.22	805.43
09/24/92	104.43	805.22
10/17/92	104.20	805.45
11/11/92	103.24	806.41
12/05/92	103.54	806.11
05/01/93	100.09	809.56
06/05/93	104.24	805.41
08/05/93	106.89	802.76
08/28/93	107.83	801.82
09/25/93	108.49	801.16

139-049-22BBB
West Fargo South Aquifer

MP Elev (msl,ft)=910.4
Sl (ft.)=130-220

Date	Depth to Water (ft)	WL Elev (msl, ft)
09/17/63	49.52	860.88
09/24/63	49.51	860.89
10/03/63	49.57	860.83
11/01/63	49.62	860.78
12/02/63	49.62	860.78
01/14/64	49.52	860.88
03/01/64	49.46	860.94
04/01/64	49.38	861.02
05/06/64	49.16	861.24
06/01/64	48.92	861.48
07/01/64	49.59	860.81
08/01/64	49.18	861.22
08/26/64	49.73	860.67
10/01/64	50.06	860.34
11/02/64	50.18	860.22
12/09/64	50.16	860.24
01/18/65	50.25	860.15
04/13/65	50.26	860.14
05/10/65	50.45	859.95
06/11/65	50.13	860.27
07/13/65	50.78	859.62
08/03/65	50.97	859.43
09/14/65	51.02	859.38
10/21/65	51.02	859.38
11/16/65	51.05	859.35
12/14/65	50.88	859.52
01/11/66	50.94	859.46
02/08/66	50.22	860.18
04/14/66	51.05	859.35
05/10/66	51.14	859.26
06/14/66	51.25	859.15
07/13/66	51.58	858.82
07/22/66	51.76	858.64
08/17/66	51.63	858.77
09/28/66	51.68	858.72
10/25/66	51.70	858.70
12/02/66	51.67	858.73
12/29/66	51.53	858.87
01/27/67	51.53	858.87
03/02/67	51.55	858.85
03/23/67	51.60	858.80
04/28/67	52.60	857.80
05/25/67	51.69	858.71
06/22/67	51.85	858.55
07/11/67	52.11	858.29
08/17/67	52.63	857.77
11/08/67	52.80	857.60
12/05/67	52.75	857.65
01/23/68	52.78	857.62
03/06/68	53.05	857.35
04/02/68	52.86	857.54
05/01/68	53.02	857.38
05/28/68	53.07	857.33
06/26/68	51.75	858.65
07/23/68	53.09	857.31
08/21/68	53.70	856.70
09/18/68	53.80	856.60
10/15/68	53.45	856.95
11/13/68	53.66	856.74
12/10/68	53.37	857.03
01/10/69	53.58	856.82
02/13/69	53.19	857.21
03/03/69	53.43	856.97
04/30/69	53.36	857.04
06/02/69	53.50	856.90
06/24/69	53.44	856.96
07/15/69	53.44	856.96
08/21/69	53.84	856.56
09/16/69	54.02	856.38
10/14/69	53.90	856.50
11/14/69	53.85	856.55
12/03/69	53.98	856.42
01/05/70	53.90	856.50
02/06/70	53.94	856.46
03/06/70	53.96	856.44
05/23/70	54.04	856.36
06/23/70	54.02	856.38
07/22/70	54.64	855.76
08/18/70	54.81	855.59
09/15/70	55.05	855.35
10/16/70	54.97	855.43
11/13/70	54.91	855.49
12/01/70	54.72	855.68
01/13/71	54.72	855.68
02/11/71	54.70	855.70
03/09/71	54.72	855.68
04/03/71	54.82	855.58
04/29/71	54.95	855.45
06/07/71	55.09	855.31
07/09/71	55.26	855.14
08/04/71	55.51	854.89
08/31/71	55.68	854.72
10/05/71	55.57	854.83
11/02/71	55.21	855.19
11/29/71	55.27	855.13
01/04/72	55.09	855.31
02/09/72	55.24	855.16
03/09/72	55.15	855.25
04/13/72	55.20	855.20
05/02/72	55.40	855.00
06/06/72	55.55	854.85
07/06/72	55.87	854.53
08/09/72	56.02	854.38
09/05/72	56.08	854.32
10/04/72	56.29	854.11
11/01/72	56.28	854.12
12/07/72	56.60	853.80
03/01/73	56.31	854.09
04/03/73	56.08	854.32
05/01/73	56.15	854.25
06/11/73	56.45	853.95
07/10/73	56.85	853.55
08/08/73	56.79	853.61
08/28/73	56.88	853.52
10/04/73	56.54	853.86
11/06/73	56.43	853.97
12/05/73	56.29	854.11
01/10/74	56.24	854.16
02/12/74	56.03	854.37
03/14/74	55.99	854.41
04/03/74	56.31	854.09
06/04/74	56.36	854.04
09/10/74	56.76	853.64
12/02/74	56.72	853.68
03/19/75	56.42	853.98
06/16/75	57.64	852.76
09/16/75	56.97	853.43
12/04/75	56.72	853.68
03/11/76	56.88	853.52
06/01/76	57.05	853.35
09/10/76	58.24	852.16
11/30/76	58.57	851.83
03/09/77	57.26	853.14
06/13/77	58.50	851.90
09/19/77	59.58	850.82
12/01/77	59.28	851.12
03/14/78	58.99	851.41
06/19/78	59.67	850.73
09/20/78	60.85	849.55
11/20/78	60.73	849.67
03/20/79	60.29	850.11
06/18/79	60.60	849.80
09/17/79	61.27	849.13
11/27/79	61.12	849.28
03/21/80	60.79	849.61
05/22/80	61.43	848.97
06/21/80	61.72	848.68
07/15/80	62.22	848.18
08/12/80	62.60	847.80
09/09/80	62.51	847.89
10/08/80	62.24	848.16
11/17/80	62.15	848.25
02/23/81	61.82	848.58
04/27/81	61.87	848.53
06/08/81	62.38	848.02
07/22/81	62.70	847.70
09/02/81	62.76	847.64
09/08/81	62.75	847.65
10/08/81	62.75	847.65
12/03/81	62.44	847.96
05/20/82	62.40	848.00
06/30/82	62.96	847.44
08/23/82	64.11	846.29
08/24/82	63.86	846.54
10/30/82	63.50	846.90
11/17/82	63.35	847.05
11/21/82	63.39	847.01
03/17/83	63.65	846.75
04/18/83	63.18	847.22
05/19/83	63.20	847.20
05/24/83	63.24	847.16
06/02/83	63.25	847.15
06/21/83	63.72	846.68
07/11/83	64.37	846.03
07/28/83	74.21	836.19
08/18/83	83.28	827.12
09/14/83	83.35	827.05
09/29/83	84.03	826.37
10/12/83	84.01	826.39
04/11/84	96.80	813.60
05/16/84	98.47	811.93
06/21/84	100.07	810.33
08/09/84	108.67	801.73
09/12/84	106.02	804.38
10/10/84	103.88	806.52
10/31/84	103.07	807.33
12/05/84	103.32	807.08
05/05/85	95.84	814.56
06/08/85	106.61	803.79
07/08/85	108.48	801.92
08/17/85	105.71	804.69
09/22/85	103.03	807.37
10/26/85	102.67	807.73
12/07/85	102.05	808.35
05/10/86	101.42	808.98
06/08/86	106.08	804.32
07/03/86	109.10	801.30
08/01/86	106.99	803.41
08/30/86	106.30	804.10
10/10/86	105.50	804.90
11/01/86	106.32	804.08
12/06/86	104.38	806.02
04/25/87	104.69	805.71
05/30/87	111.47	798.93
06/27/87	116.04	794.36
08/01/87	116.98	793.42
08/29/87	117.47	792.93
09/26/87	116.85	793.55
10/31/87	108.29	802.11
11/28/87	110.80	799.60
12/19/87	109.83	800.57
04/02/88	109.10	801.30
04/30/88	110.93	799.47
05/27/88	113.99	796.41
06/24/88	118.47	791.93
07/22/88	120.25	790.15
08/20/88	120.92	789.48
09/01/88	121.73	788.67
09/17/88	121.67	788.73
10/15/88	115.59	794.81
11/05/88	114.41	795.99
12/10/88	113.63	796.77
04/22/89	110.43	799.97
05/12/89	110.52	799.88
06/03/89	111.36	799.04
06/30/89	117.32	793.08
07/30/89	120.30	790.10
09/09/89	114.80	795.60
09/30/89	111.85	798.55
10/28/89	106.80	803.60
11/19/89	100.70	809.70
05/05/90	106.15	804.25
05/28/90	105.95	804.45
06/29/90	107.91	802.49
08/03/90	114.75	795.65
09/01/90	120.18	790.22
09/29/90	115.76	794.64
10/27/90	112.27	798.13
11/17/90	108.45	801.95
12/08/90	107.26	803.14
03/29/91	108.34	802.06
05/10/91	108.57	801.83
06/01/91	111.22	799.18

139-049-23ADC
Undefined Aquifer

MP Elev (msl,ft)=904
Sl (ft.)=0-167

Date	Depth to Water (ft)	WL Elev (msl, ft)
06/18/87	85.40	818.60
06/02/89	60.00	844.00
03/29/91	75.00	829.00
07/27/94	91.64	812.36

139-049-23DAD MP Elev (msl,ft)=905
Undefined Aquifer SI (ft.)=146-155

Date	Depth to Water (ft)	WL Elev (msl, ft)	Date	Depth to Water (ft)	WL Elev (msl, ft)	Date	Depth to Water (ft)	WL Elev (msl, ft)	Date	Depth to Water (ft)	WL Elev (msl, ft)
08/07/80	66.40	838.60	05/18/84	66.00	839.00	10/27/87	94.00	811.00	03/29/91	76.00	829.00

139-049-28DDD MP Elev (msl,ft)=903.5
West Fargo South Aquifer SI (ft.)=148-151

Date	Depth to Water (ft)	WL Elev (msl, ft)	Date	Depth to Water (ft)	WL Elev (msl, ft)	Date	Depth to Water (ft)	WL Elev (msl, ft)	Date	Depth to Water (ft)	WL Elev (msl, ft)
08/24/82	52.78	850.72	06/08/86	79.25	824.25	09/09/89	89.40	814.10	12/06/92	90.83	812.67
09/08/82	51.63	851.87	07/03/86	80.75	822.75	09/30/89	88.08	815.42			
11/18/82	52.30	851.20	08/01/86	81.32	822.18	10/28/89	86.92	816.58	05/01/93	87.73	815.77
			08/30/86	81.30	822.20	11/19/89	84.20	819.30	06/05/93	89.98	813.52
04/18/83	52.19	851.31	10/10/86	81.08	822.42				08/05/93	92.46	811.04
05/19/83	52.27	851.23	11/01/86	81.34	822.16	05/05/90	82.74	820.76	08/28/93	93.11	810.39
05/24/83	52.30	851.20	12/06/86	80.95	822.55	05/28/90	83.01	820.49	09/25/93	93.74	809.76
06/02/83	52.34	851.16				06/29/90	83.64	819.86	10/18/93	94.03	809.47
06/21/83	52.67	850.83	04/25/87	79.53	823.97	08/03/90	85.63	817.87	11/12/93	93.50	810.00
07/28/83	55.95	847.55	05/30/87	82.35	821.15	09/01/90	88.72	814.78			
08/18/83	59.86	843.64	06/27/87	84.90	818.60	09/29/90	89.03	814.47	04/16/94	93.00	810.50
09/15/83	62.25	841.25	08/01/87	86.39	817.11	10/27/90	87.80	815.70	05/15/94	93.13	810.37
10/12/83	63.34	840.16	08/29/87	86.90	816.60	11/07/90	87.30	816.20	06/11/94	94.44	809.06
11/08/83	64.40	839.10	09/26/87	87.63	815.87	11/17/90	86.55	816.95	07/24/94	94.87	808.63
12/15/83	64.75	838.75	10/31/87	84.74	818.76	12/08/90	85.65	817.85	08/20/94	95.60	807.90
			11/28/87	84.80	818.70				09/24/94	96.00	807.50
04/11/84	71.03	832.47	12/19/87	84.82	818.68	03/29/91	85.06	818.44	10/28/94	96.13	807.37
05/16/84	72.57	830.93				05/10/91	84.58	818.92	11/26/94	96.78	806.72
06/21/84	74.25	829.25	04/02/88	83.88	819.62	06/01/91	85.42	818.08			
07/12/84	75.44	828.06	04/30/88	84.13	819.37	07/13/91	85.94	817.56	04/30/95	93.89	809.61
08/09/84	78.16	825.34	05/27/88	85.50	818.00	08/10/91	87.81	815.69	05/28/95	93.89	809.61
09/12/84	79.75	823.75	06/24/88	87.70	815.80	08/31/91	88.53	814.97	07/01/95	96.14	807.36
10/10/84	78.72	824.78	07/22/88	89.30	814.20	09/28/91	88.80	814.70	08/05/95	94.91	808.59
10/31/84	77.89	825.61	08/20/88	90.08	813.42	10/20/91	89.67	813.83	09/09/95	95.30	808.20
12/05/84	77.99	825.51	09/02/88	90.50	813.00	11/17/91	90.11	813.39	10/27/95	93.23	810.27
			09/17/88	90.84	812.66	12/20/91	90.14	813.36	11/21/95	93.32	810.18
04/10/85	77.18	826.32	10/15/88	89.26	814.24						
05/05/85	74.99	828.51	11/05/88	88.53	814.97	04/17/92	89.48	814.02	06/04/96	88.16	815.34
06/08/85	78.20	825.30	12/10/88	87.80	815.70	05/20/92	90.26	813.24	06/30/96	90.50	813.00
07/08/85	79.27	824.23				06/13/92	90.86	812.64	07/28/96	93.35	810.15
08/17/85	80.79	822.71	04/22/89	85.69	817.81	07/26/92	90.59	812.91	08/24/96	94.60	808.90
09/22/85	79.40	824.10	05/12/89	85.57	817.93	08/27/92	90.79	812.71	10/05/96	95.35	808.15
10/26/85	78.80	824.70	06/03/89	85.95	817.55	09/24/92	90.90	812.60	11/02/96	95.76	807.74
			06/30/89	87.44	816.06	10/17/92	91.05	812.45	11/13/96	96.36	807.14
05/10/86	77.79	825.71	07/30/89	89.56	813.94	11/11/92	90.45	813.05			

139-049-29CDC MP Elev (msl,ft)=905
Ponderosa Aquifer SI (ft.)=169-177

Date	Depth to Water (ft)	WL Elev (msl, ft)	Date	Depth to Water (ft)	WL Elev (msl, ft)	Date	Depth to Water (ft)	WL Elev (msl, ft)	Date	Depth to Water (ft)	WL Elev (msl, ft)
9/16/94	89.00	816.00									

139-049-29DDD1 MP Elev (msl,ft)=909.97
West Fargo South Aquifer SI (ft.)=238-243

Date	Depth to Water (ft)	WL Elev (msl, ft)	Date	Depth to Water (ft)	WL Elev (msl, ft)	Date	Depth to Water (ft)	WL Elev (msl, ft)	Date	Depth to Water (ft)	WL Elev (msl, ft)
10/27/90	95.41	814.56	12/20/91	97.92	812.05	08/05/93	100.22	809.75			
11/07/90	95.55	814.42				08/28/93	100.87	809.10	04/30/95	102.83	807.14
11/17/90	94.07	815.90	04/17/92	97.10	812.87	09/25/93	101.52	808.45	05/28/95	102.82	807.15
12/08/90	93.19	816.78	05/20/92	97.90	812.07	10/18/93	101.75	808.22	07/01/95	105.22	804.75
			06/13/92	98.57	811.40	11/12/93	101.11	808.86	08/05/95	103.88	806.09
03/29/91	92.47	817.50	07/26/92	98.21	811.76				09/09/95	104.22	805.75
05/10/91	92.06	817.91	08/27/92	98.46	811.51	04/16/94	100.65	809.32	10/27/95	102.54	807.43
06/01/91	93.03	816.94	09/24/92	98.54	811.43	05/15/94	100.79	809.18	11/21/95	102.06	807.91
07/13/91	93.51	816.46	10/17/92	98.67	811.30	06/11/94	102.19	807.78			
08/10/91	95.58	814.39	11/11/92	98.05	811.92	07/24/94	102.52	807.45	06/04/96	96.89	813.08
08/31/91	96.23	813.74	12/06/92	97.39	812.58	08/20/94	103.38	806.59	06/30/96	99.48	810.49
09/28/91	96.50	813.47				09/24/94	103.76	806.21	07/28/96	102.42	807.55
10/20/91	97.38	812.59	05/01/93	95.31	814.66	10/29/94	105.48	804.49	08/24/96	103.69	806.28
11/17/91	97.80	812.17	06/05/93	97.68	812.29	11/26/94	106.19	803.78	10/05/96	104.37	805.60

139-049-29DDD2
West Fargo South Aquifer

MP Elev (msl,ft)=908.94
SI (ft.)=142-147

Date	Depth to Water (ft)	WL Elev (msl, ft)
10/27/90	94.56	814.38
11/07/90	94.09	814.85
11/17/90	93.33	815.61
12/08/90	92.47	816.47
03/29/91	91.92	817.02
05/10/91	91.51	817.43
06/01/91	92.29	816.65
07/13/91	92.74	816.20
08/10/91	94.75	814.19
08/31/91	95.46	813.48
09/28/91	95.73	813.21
10/20/91	96.36	812.58
11/17/91	97.04	811.90
12/20/91	97.15	811.79
04/17/92	96.32	812.62
05/20/92	97.18	811.76
06/13/92	97.68	811.26
07/26/92	97.48	811.46
08/27/92	97.72	811.22
09/24/92	97.78	811.16
10/17/92	97.95	810.99
11/11/92	97.32	811.62
12/06/92	96.68	812.26
05/01/93	94.52	814.42
06/05/93	96.88	812.06
08/05/93	99.48	809.46
08/28/93	100.08	808.86
09/25/93	100.73	808.21
10/18/93	101.02	807.92
11/12/93	100.50	808.44
04/16/94	100.02	808.92
05/15/94	100.12	808.82
06/11/94	101.40	807.54
07/24/94	102.00	806.94
08/20/94	102.37	806.57
09/24/94	103.07	805.87
10/29/94	105.95	802.99
11/26/94	105.83	803.11
04/30/95	103.32	805.62
05/28/95	103.24	805.70
07/01/95	105.47	803.47
08/05/95	104.30	804.64
09/09/95	104.63	804.31
10/27/95	103.04	805.90
11/21/95	102.65	806.29
06/04/96	97.27	811.67
06/30/96	99.73	809.21
07/28/96	102.73	806.21
08/24/96	103.99	804.95
10/05/96	104.63	804.31

139-049-30DCC
Ponderosa Aquifer

MP Elev (msl,ft)=900.87
SI (ft.)=165-170

Date	Depth to Water (ft)	WL Elev (msl, ft)
10/27/90	76.35	824.52
11/07/90	76.15	824.72
11/14/90	76.15	824.72
11/17/90	75.78	825.09
12/08/90	75.33	825.54
03/29/91	74.46	826.41
05/10/91	74.15	826.72
06/01/91	74.47	826.40
07/13/91	75.08	825.79
08/10/91	75.66	825.21
08/31/91	76.46	824.41
09/28/91	76.65	824.22
10/20/91	77.05	823.82
11/17/91	77.45	823.42
12/20/91	77.73	823.14
04/17/92	77.51	823.36
05/20/92	77.97	822.90
06/13/92	78.38	822.49
07/26/92	78.46	822.41
08/27/92	78.61	822.26
09/24/92	78.52	822.35
10/17/92	78.94	821.93
11/11/92	78.61	822.26
12/06/92	78.36	822.51
05/01/93	76.93	823.94
06/05/93	77.45	823.42
08/05/93	79.14	821.73
08/28/93	79.54	821.33
09/25/93	80.14	820.73
10/18/93	80.50	820.37
11/12/93	80.57	820.30
04/16/94	80.46	820.41
05/15/94	80.51	820.36
06/11/94	81.10	819.77
07/24/94	81.70	819.17
08/20/94	82.00	818.87
09/24/94	82.26	818.61
10/28/94	84.72	816.15
11/26/94	85.35	815.52
04/30/95	84.42	816.45
05/28/95	84.14	816.73
07/01/95	85.08	815.79
08/05/95	85.08	815.79
09/09/95	85.49	815.38
10/27/95	84.33	816.54
11/21/95	84.46	816.41
06/04/96	80.96	819.91
06/30/96	81.60	819.27
07/28/96	83.01	817.86
08/24/96	83.86	817.01
10/05/96	84.66	816.21
11/02/96	85.04	815.83

139-049-32DDC
Ponderosa Aquifer

MP Elev (msl,ft)=909.56
SI (ft.)=240-245

Date	Depth to Water (ft)	WL Elev (msl, ft)
10/11/90	87.47	822.09
11/07/90	87.47	822.09
11/14/90	86.66	822.90
11/17/90	87.33	822.23
12/08/90	85.93	823.63
03/29/91	85.08	824.48
05/10/91	84.72	824.84
06/01/91	85.13	824.43
07/13/91	85.82	823.74
08/10/91	86.84	822.72
08/31/91	87.72	821.84
09/28/91	87.94	821.62
10/20/91	88.56	821.00
11/17/91	89.00	820.56
12/20/91	89.20	820.36
04/17/92	88.73	820.83
05/20/92	89.35	820.21
06/13/92	89.80	819.76
07/26/92	89.83	819.73
08/27/92	89.99	819.57
09/24/92	89.96	819.60
10/17/92	90.30	819.26
11/11/92	89.88	819.68
12/06/92	89.46	820.10
05/01/93	87.61	821.95
06/05/93	88.83	820.73
08/05/93	90.02	819.54
08/28/93	91.57	817.99
09/25/93	92.15	817.41
10/18/93	92.50	817.06
11/12/93	92.39	817.17
04/16/94	92.04	817.52
05/15/94	92.14	817.42
06/11/94	92.87	816.69
07/24/94	93.60	815.96
08/20/94	93.66	815.90
09/24/94	94.34	815.22
10/28/94	94.32	815.24
11/26/94	94.04	815.52
04/30/95	93.29	816.27
05/28/95	93.04	816.52
07/01/95	94.51	815.05
08/05/95	94.12	815.44
09/09/95	94.56	815.00
10/27/95	93.00	816.56
11/21/95	93.08	816.48
06/04/96	88.72	820.84
06/30/96	89.95	819.61
07/28/96	92.01	817.55
08/24/96	93.12	816.44
10/05/96	94.12	815.44
11/02/96	94.45	815.11

139-050-01CCC MP Elev (msl,ft)=899.08

94/10 Channel Aquifer SI (ft.)=258-261

Date	Depth to Water (ft)	WL Elev (msl. ft)
09/08/81	60.15	838.93
08/25/82	60.41	838.67
11/17/82	60.50	838.58
03/17/83	60.10	838.98
04/18/83	60.20	838.88
05/24/83	60.22	838.86
06/02/83	60.10	838.98
06/22/83	60.24	838.84
07/28/83	60.40	838.68
08/18/83	60.54	838.54
09/14/83	60.79	838.29
10/12/83	60.81	838.27
11/08/83	60.89	838.19
12/14/83	60.08	839.00
04/11/84	61.17	837.91
05/16/84	61.48	837.60
06/21/84	61.59	837.49
07/11/84	61.78	837.30
08/08/84	62.09	836.99
09/12/84	62.40	836.68
10/09/84	62.81	836.27
10/31/84	63.62	835.46
12/05/84	62.81	836.27
04/09/85	62.81	836.27
05/05/85	62.70	836.38
06/07/85	62.68	836.40
07/08/85	62.96	836.12
08/18/85	63.22	835.86
09/22/85	63.20	835.88
10/25/85	63.19	835.89
12/08/85	63.33	835.75
05/10/86	62.98	836.10
06/06/86	63.04	836.04
07/04/86	63.33	835.75
07/15/86	63.19	835.89
08/03/86	63.51	835.57
08/30/86	63.55	835.53
10/11/86	63.63	835.45
11/01/86	63.83	835.25
12/06/86	63.74	835.34
12/09/86	63.60	835.48
04/25/87	63.59	835.49
05/30/87	63.47	835.61
06/27/87	63.75	835.33
07/16/87	63.62	835.46
07/31/87	63.89	835.19
08/29/87	64.05	835.03
09/25/87	64.23	834.85
10/31/87	64.44	834.64
11/28/87	64.48	834.60
12/19/87	64.13	834.95
04/02/88	64.32	834.76
04/29/88	64.23	834.85
05/27/88	64.18	834.90
06/25/88	64.64	834.44
07/12/88	64.79	834.29
07/23/88	65.02	834.06
08/21/88	64.93	834.15
09/02/88	65.13	833.95
09/16/88	65.17	833.91
10/14/88	65.18	833.90
11/05/88	65.17	833.91
12/11/88	65.58	833.50
04/21/89	65.28	833.80
05/13/89	65.39	833.69
06/03/89	65.37	833.71
07/01/89	65.56	833.52
07/30/89	65.95	833.13
09/10/89	66.00	833.08
10/01/89	65.73	833.35
10/28/89	66.08	833.00
11/19/89	65.94	833.14
01/04/90	66.08	833.00
05/04/90	65.93	833.15
05/25/90	65.85	833.23
06/30/90	65.85	833.23
08/04/90	66.23	832.85
09/02/90	66.34	832.74
09/29/90	66.50	832.58
10/09/90	66.50	832.58
10/26/90	66.19	832.89
11/18/90	66.32	832.76
12/08/90	66.38	832.70
03/30/91	66.25	832.83
05/11/91	66.28	832.80
06/01/91	66.19	832.89
07/13/91	66.41	832.67
08/10/91	66.58	832.50
08/31/91	66.67	832.41
09/28/91	66.65	832.43
10/20/91	67.09	831.99
11/16/91	66.83	832.25
12/21/91	66.83	832.25
04/18/92	66.59	832.49
05/20/92	66.93	832.15
06/13/92	66.86	832.22
07/26/92	66.95	832.13
08/27/92	67.01	832.07
09/24/92	66.82	832.26
10/18/92	67.22	831.86
11/12/92	67.12	831.96
12/05/92	67.02	832.06
05/01/93	67.03	832.05
06/04/93	66.92	832.16
08/06/93	66.76	832.32
08/29/93	67.02	832.06
09/25/93	66.98	832.10

139-050-02BAA MP Elev (msl,ft)=898.4

Prosper Aquifer SI (ft.)=225-230

Date	Depth to Water (ft)	WL Elev (msl. ft)
12/21/91	56.86	841.54
04/18/92	56.76	841.64
05/20/92	56.94	841.46
06/13/92	57.00	841.40
07/26/92	56.97	841.43
08/27/92	57.02	841.38
09/24/92	56.92	841.48
10/17/92	57.13	841.27
11/11/92	56.77	841.63
12/05/92	56.98	841.42
05/01/93	56.80	841.60
06/05/93	56.77	841.63
08/05/93	56.48	841.92
08/28/93	56.87	841.53
09/25/93	56.87	841.53
10/17/93	56.92	841.48
11/11/93	56.97	841.43
04/16/94	57.01	841.39
05/15/94	57.03	841.37
06/11/94	57.18	841.22
07/24/94	57.21	841.19
07/27/94	57.20	841.20
08/20/94	57.36	841.04
09/24/94	57.14	841.26
10/28/94	58.51	839.89
11/26/94	58.79	839.61
04/29/95	58.99	839.41
05/28/95	58.92	839.48
07/01/95	59.12	839.28
08/05/95	59.13	839.27
09/09/95	59.25	839.15
10/27/95	59.15	839.25
11/21/95	59.38	839.02
06/04/96	59.30	839.10
06/30/96	59.45	838.95
07/28/96	59.63	838.77
08/24/96	59.77	838.63
10/05/96	59.60	838.80
11/02/96	59.60	838.80

139-050-12CCC
94/10 Channel Aquifer

MP Elev (msl,ft)=900.4
SI (ft.)=178-183

Date	Depth to Water (ft)	WL Elev (msl. ft)
03/18/83	60.16	840.24
04/18/83	60.22	840.18
05/20/83	60.23	840.17
05/24/83	60.35	840.05
06/02/83	60.12	840.28
06/22/83	60.11	840.29
08/18/83	60.31	840.09
09/14/83	60.67	839.73
10/12/83	60.75	839.65
11/08/83	60.96	839.44
12/14/83	60.86	839.54
04/11/84	61.33	839.07
05/16/84	61.55	838.85
06/21/84	61.72	838.68
07/12/84	61.89	838.51
08/09/84	62.23	838.17
09/12/84	62.58	837.82
10/10/84	63.11	837.29
10/31/84	62.95	837.45
12/05/84	63.19	837.21
04/10/85	63.07	837.33
05/05/85	63.01	837.39
06/08/85	62.88	837.52
07/08/85	63.34	837.06
08/17/85	63.72	836.68
09/22/85	63.58	836.82
10/26/85	63.70	836.70
12/07/85	63.47	836.93
06/08/86	63.74	836.66
07/05/86	63.77	836.63
08/03/86	63.86	836.54
08/30/86	64.02	836.38
10/11/86	64.19	836.21
11/01/86	64.46	835.94
12/06/86	64.40	836.00
04/24/87	64.13	836.27
05/30/87	64.05	836.35
06/27/87	64.28	836.12
08/01/87	64.32	836.08
08/29/87	64.54	835.86
09/26/87	64.62	835.78
10/31/87	65.07	835.33
11/28/87	65.01	835.39
12/19/87	64.65	835.75
04/02/88	64.80	835.60
04/30/88	64.78	835.62
05/27/88	64.80	835.60
06/15/88	65.22	835.18
06/24/88	64.93	835.47
07/22/88	65.52	834.88
08/20/88	65.53	834.87
09/16/88	65.68	834.72
10/15/88	65.70	834.70
11/05/88	65.84	834.56
12/10/88	66.29	834.11
04/21/89	65.88	834.52
05/12/89	65.92	834.48
06/03/89	65.90	834.50
07/01/89	66.15	834.25
07/30/89	66.42	833.98
09/10/89	66.66	833.74
09/30/89	66.37	834.03
10/28/89	66.70	833.70
11/19/89	66.46	833.94
05/05/90	66.55	833.85
05/25/90	66.40	834.00
06/29/90	66.40	834.00
08/03/90	66.41	833.99
09/01/90	66.86	833.54
09/29/90	67.13	833.27
10/26/90	66.69	833.71
11/08/90	66.81	833.59
11/17/90	67.04	833.36
12/08/90	66.96	833.44
03/29/91	67.07	833.33
05/10/91	66.80	833.60
06/01/91	66.85	833.55
07/13/91	67.07	833.33
08/10/91	67.17	833.23
08/31/91	67.25	833.15
09/28/91	67.23	833.17
10/20/91	67.23	833.17
11/17/91	67.05	833.35
12/20/91	67.53	832.87
04/17/92	67.33	833.07
05/20/92	67.41	832.99
06/13/92	67.47	832.93
07/26/92	67.57	832.83
08/27/92	67.69	832.71
09/24/92	67.38	833.02
10/17/92	67.88	832.52
12/05/92	67.69	832.71
05/01/93	67.69	832.71
06/05/93	67.57	832.83
08/05/93	67.53	832.87
08/28/93	67.66	832.74
09/25/93	67.67	832.73
10/18/93	67.80	832.60
11/11/93	67.93	832.47
04/16/94	68.10	832.30
05/15/94	68.12	832.28
06/11/94	68.03	832.37
07/24/94	68.29	832.11
08/20/94	68.38	832.02
09/24/94	68.46	831.94
10/28/94	68.01	832.39
11/26/94	68.54	831.86
04/30/95	68.74	831.66
05/28/95	68.60	831.80
07/01/95	68.94	831.46
08/05/95	68.77	831.63
09/09/95	69.08	831.32
10/27/95	68.47	831.93
11/21/95	69.07	831.33
06/04/96	68.70	831.70
06/30/96	68.83	831.57
07/28/96	68.98	831.42
08/24/96	68.95	831.45
10/05/96	68.88	831.52

139-050-23AAA
Horace Aquifer

MP Elev (msl,ft)=901.82
SI (ft.)=148-151

Date	Depth to Water (ft)	WL Elev (msl. ft)
06/05/64	27.99	873.83
07/01/64	28.33	873.49
08/01/64	28.30	873.52
09/03/64	28.51	873.31
10/01/64	28.06	873.76
11/02/64	28.44	873.38
12/09/64	28.70	873.12
05/10/65	29.05	872.77
06/11/65	29.12	872.70
08/03/66	29.84	871.98
07/11/67	30.44	871.38
07/23/68	32.26	869.56
07/31/69	32.14	869.68
12/04/69	32.49	869.33
12/01/70	32.42	869.40
11/29/71	33.40	868.42
12/07/72	34.04	867.78
12/05/73	34.29	867.53
12/04/75	34.36	867.46
11/30/76	35.40	866.42
11/20/78	37.57	864.25
05/22/80	36.88	864.94
06/24/80	37.39	864.43
07/15/80	36.60	865.22
08/13/80	37.66	864.16
09/09/80	38.18	863.64
10/08/80	37.71	864.11
11/17/80	38.10	863.72
02/23/81	37.62	864.20
04/27/81	37.85	863.97
06/08/81	37.61	864.21
07/22/81	38.24	863.58
09/02/81	38.03	863.79
09/08/81	37.82	864.00
10/08/81	38.08	863.74
12/03/81	38.11	863.71
05/20/82	38.32	863.50
10/30/82	38.70	863.12
11/17/82	38.39	863.43
11/21/82	39.10	862.72
04/18/83	38.62	863.20
05/24/83	38.82	863.00
06/02/83	38.49	863.33
06/22/83	38.83	862.99
07/28/83	38.84	862.98
08/18/83	38.89	862.93
09/14/83	39.67	862.15
10/12/83	40.21	861.61
11/08/83	40.81	861.01
04/11/84	42.62	859.20
05/16/84	43.55	858.27
06/21/84	44.15	857.67
07/12/84	44.54	857.28
05/05/85	48.59	853.23
06/08/85	47.18	854.64
07/08/85	47.84	853.98
08/17/85	48.57	853.25
09/22/85	48.44	853.38
10/26/85	48.70	853.12
05/10/86	48.71	853.11
06/08/86	48.89	852.93
07/05/86	49.08	852.74
08/03/86	49.10	852.72
08/30/86	49.29	852.53
10/11/86	49.70	852.12
11/01/86	50.10	851.72
12/06/86	50.14	851.68
04/24/87	49.47	852.35
05/30/87	49.40	852.42
06/27/87	49.06	852.76
08/01/87	49.99	851.83
08/29/87	50.40	851.42
09/26/87	50.70	851.12
10/31/87	51.50	850.32
11/28/87	51.41	850.41
12/19/87	50.95	850.87
04/02/88	50.96	850.86
04/30/88	50.90	850.92
05/27/88	50.85	850.97
06/24/88	51.01	850.81
07/22/88	51.57	850.25
08/20/88	51.64	850.18
09/01/88	51.95	849.87
09/16/88	51.91	849.91
10/15/88	52.04	849.78
11/05/88	52.35	849.47
12/10/88	52.94	848.88
04/21/89	52.35	849.47
05/12/89	52.30	849.52
06/03/89	52.24	849.58
07/01/89	52.20	849.62
07/30/89	52.46	849.36
09/10/89	52.84	848.98
09/30/89	52.31	849.51
10/28/89	52.81	849.01
11/19/89	52.37	849.45
05/05/90	52.09	849.73
05/25/90	51.80	850.02
06/29/90	51.58	850.24
08/03/90	51.84	849.98
09/01/90	52.24	849.58
09/29/90	52.69	849.13
10/26/90	52.13	849.69
11/08/90	52.46	849.36
11/17/90	52.58	849.24
12/08/90	52.57	849.25
03/29/91	53.12	848.70
05/10/91	52.75	849.07
06/01/91	52.72	849.10
07/13/91	53.02	848.80
08/10/91	52.88	848.94
08/31/91	52.96	848.86
09/28/91	52.75	849.07
10/20/91	52.94	848.88
11/17/91	52.93	848.89
12/20/91	53.52	848.30
04/17/92	53.25	848.57
05/20/92	53.39	848.43
06/13/92	53.42	848.40
07/26/92	53.75	848.07
08/27/92	53.81	848.01
09/24/92	53.47	848.35
10/17/92	54.22	847.60
12/05/92	53.94	847.88
05/01/93	53.93	847.89
06/05/93	53.72	848.10
08/05/93	54.02	847.80
08/28/93	53.92	847.90
09/25/93	53.91	847.91
10/18/93	54.14	847.68
11/11/93	54.36	847.46
04/16/94	54.68	847.14
05/15/94	54.67	847.15
06/11/94	54.54	847.28
07/24/94	54.91	846.91
08/20/94	55.08	846.74
09/24/94	55.16	846.66
10/28/94	54.65	847.17
11/26/94	55.36	846.46
04/30/95	55.80	846.02
05/28/95	55.55	846.27
07/01/95	55.75	846.07
08/05/95	55.64	846.18
09/09/95	56.06	845.76
10/27/95	55.30	846.52
11/21/95	56.09	845.73
06/04/96	55.26	846.56
06/30/96	55.33	846.49
07/28/96	55.38	846.44
08/24/96	55.24	846.58
10/05/96	55.29	846.53
11/02/96	55.68	846.14
11/13/96	56.43	845.39

140-048-04CBB MP Elev (msl,ft)=894.9

Undefined Aquifer SI (ft.)=0-0

Date	Depth to Water (ft)	WL Elev (msl, ft)	Date	Depth to Water (ft)	WL Elev (msl, ft)	Date	Depth to Water (ft)	WL Elev (msl, ft)	Date	Depth to Water (ft)	WL Elev (msl, ft)
07/19/40	21.15	873.75	04/05/41	21.09	873.81				09/27/42	21.57	873.33
07/24/40	20.89	874.01	04/12/41	20.87	874.03	01/04/42	21.54	873.36	10/04/42	21.88	873.02
07/31/40	20.66	874.24	04/20/41	21.04	873.86	01/10/42	21.55	873.35	10/11/42	21.90	873.00
08/03/40	20.78	874.12	04/27/41	21.07	873.83	01/17/42	21.49	873.41	10/17/42	21.91	872.99
08/10/40	20.88	874.02	05/03/41	21.02	873.88	01/25/42	21.53	873.37	10/25/42	21.88	873.02
08/17/40	20.91	873.99	05/10/41	21.16	873.74	02/01/42	21.58	873.32	11/12/42	22.02	872.88
08/24/40	20.89	874.01	05/17/41	21.12	873.78	02/07/42	21.55	873.35	11/21/42	22.13	872.77
08/31/40	20.88	874.02	05/24/41	21.18	873.72	02/15/42	21.52	873.38	11/28/42	22.05	872.85
09/07/40	20.97	873.93	05/31/41	21.16	873.74	02/21/42	21.53	873.37	12/05/42	22.02	872.88
09/14/40	21.01	873.89	06/07/41	20.98	873.92	02/28/42	21.64	873.26	12/12/42	22.03	872.87
09/21/40	21.06	873.84	06/15/41	20.98	873.92	03/07/42	21.67	873.23	12/19/42	21.96	872.94
09/28/40	21.08	873.82	06/22/41	21.10	873.80	03/14/42	21.71	873.19	12/26/42	21.98	872.92
10/05/40	21.07	873.83	06/29/41	21.08	873.82	03/21/42	21.73	873.17			
10/12/40	21.10	873.80	07/06/41	21.12	873.78	03/28/42	21.79	873.11	01/02/43	22.04	872.86
10/19/40	21.10	873.80	07/13/41	21.35	873.55	04/05/42	21.78	873.12	01/09/43	21.93	872.97
10/26/40	21.10	873.80	07/19/41	21.29	873.61	04/11/42	21.61	873.29	01/16/43	21.95	872.95
11/02/40	21.05	873.85	07/26/41	21.33	873.57	04/18/42	21.87	873.03	01/23/43	21.98	872.92
11/09/40	21.07	873.83	08/03/41	21.40	873.50	04/25/42	21.90	873.00	01/30/43	21.99	872.91
11/16/40	21.03	873.87	08/09/41	21.32	873.58	05/02/42	21.36	873.54	02/06/43	21.95	872.95
11/23/40	21.15	873.75	08/16/41	21.39	873.51	05/09/42	21.22	873.68	02/13/43	21.98	872.92
11/30/40	20.74	874.16	08/23/41	21.30	873.60	05/17/42	21.45	873.45	02/20/43	21.92	872.98
12/07/40	20.62	874.28	08/30/41	21.37	873.53	05/23/42	21.39	873.51	02/27/43	21.84	873.06
12/14/40	21.11	873.79	09/06/41	21.39	873.51	05/30/42	21.51	873.39	03/06/43	21.99	872.91
12/21/40	21.04	873.86	09/13/41	21.36	873.54	06/07/42	21.43	873.47	03/13/43	22.00	872.90
12/28/40	20.99	873.91	09/20/41	21.34	873.56	06/14/42	21.39	873.51	03/20/43	21.97	872.93
			09/28/41	21.43	873.47	06/21/42	21.44	873.46	03/27/43	21.93	872.97
01/05/41	21.02	873.88	10/04/41	21.37	873.53	06/27/42	21.41	873.49	04/02/43	21.90	873.00
01/11/41	21.07	873.83	10/11/41	21.37	873.53	07/04/42	21.61	873.29	04/10/43	22.04	872.86
01/18/41	21.08	873.82	10/18/41	21.39	873.51	07/12/42	21.59	873.31	04/17/43	22.09	872.81
01/26/41	20.24	874.66	10/25/41	21.38	873.52	07/19/42	21.76	873.14	04/24/43	21.92	872.98
02/01/41	21.08	873.82	11/02/41	21.38	873.52	07/26/42	21.76	873.14	05/01/43	22.08	872.82
02/08/41	21.06	873.84	11/09/41	21.39	873.51	08/02/42	21.89	873.01	05/08/43	22.11	872.79
02/16/41	21.02	873.88	11/15/41	21.39	873.51	08/09/42	21.97	872.93	05/15/43	22.03	872.87
02/22/41	21.13	873.77	11/23/41	21.39	873.51	08/15/42	22.01	872.89	05/22/43	22.09	872.81
03/01/41	21.02	873.88	11/30/41	21.45	873.45	08/23/42	21.92	872.98	05/29/43	21.96	872.94
03/09/41	21.06	873.84	12/06/41	21.50	873.40	08/30/42	22.22	872.68	06/05/43	21.88	873.02
03/15/41	21.05	873.85	12/13/41	21.41	873.49	09/06/42	22.01	872.89	06/12/43	21.80	873.10
03/23/41	21.13	873.77	12/20/41	21.44	873.46	09/13/42	22.09	872.81	06/21/43	21.93	872.97
03/29/41	21.08	873.82	12/28/41	21.53	873.37	09/20/42	21.51	873.39	06/26/43	21.87	873.03

140-048-23DDD MP Elev (msl,ft)=905.1

Undefined Aquifer SI (ft.)=0-0

Date	Depth to Water (ft)	WL Elev (msl, ft)	Date	Depth to Water (ft)	WL Elev (msl, ft)	Date	Depth to Water (ft)	WL Elev (msl, ft)	Date	Depth to Water (ft)	WL Elev (msl, ft)
07/19/40	42.37	862.73	06/22/41	42.53	862.57	02/15/42	42.94	862.16	11/12/42	43.29	861.81
07/24/40	42.59	862.51	06/29/41	42.24	862.86	02/21/42	42.90	862.20	11/21/42	43.45	861.65
07/31/40	42.64	862.46	07/13/41	42.65	862.45	02/28/42	43.04	862.06	11/28/42	43.14	861.96
08/03/40	42.41	862.69	07/19/41	42.62	862.48	03/07/42	42.97	862.13	12/07/42	43.35	861.75
08/10/40	42.67	862.43	07/26/41	42.89	862.21	03/14/42	42.91	862.19	12/12/42	43.35	861.75
10/19/40	42.83	862.27	08/03/41	42.89	862.21	03/21/42	42.99	862.11	12/19/42	43.39	861.71
10/26/40	42.85	862.25	08/09/41	43.03	862.07	04/18/42	43.02	862.08	12/26/42	43.30	861.80
11/02/40	42.54	862.56	08/16/41	43.03	862.07	04/25/42	42.94	862.16			
11/09/40	42.76	862.34	08/23/41	43.05	862.05	05/09/42	42.74	862.36	01/02/43	43.34	861.76
11/16/40	42.40	862.70	08/30/41	42.82	862.28	05/17/42	42.74	862.36	01/09/43	43.25	861.85
11/23/40	42.81	862.29	09/06/41	42.89	862.21	05/23/42	42.71	862.39	01/16/43	43.29	861.81
11/30/40	42.50	862.60	09/13/41	42.89	862.21	05/30/42	42.74	862.36	01/23/43	43.31	861.79
12/07/40	42.59	862.51	09/20/41	42.63	862.47	06/07/42	42.72	862.38	01/30/43	43.33	861.77
12/14/40	42.58	862.52	09/28/41	42.79	862.31	06/14/42	42.69	862.41	02/06/43	43.26	861.84
12/21/40	42.51	862.59	10/11/41	42.79	862.31	06/21/42	43.02	862.08	02/13/43	43.32	861.78
12/28/40	42.50	862.60	10/18/41	42.76	862.34	06/27/42	42.99	862.11	02/20/43	43.31	861.79
			10/25/41	42.29	862.81	07/04/42	42.97	862.13	02/27/43	43.27	861.83
01/05/41	42.41	862.69	11/02/41	42.77	862.33	07/12/42	43.01	862.09	03/06/43	43.30	861.80
01/11/41	42.40	862.70	11/08/41	42.87	862.23	07/19/42	42.99	862.11	03/13/43	43.34	861.76
01/18/41	42.63	862.47	11/15/41	42.81	862.29	07/26/42	43.13	861.97	03/27/43	43.22	861.88
02/01/41	42.52	862.58	11/23/41	42.91	862.19	08/02/42	43.33	861.77	04/02/43	43.30	861.80
02/08/41	42.42	862.68	11/30/41	42.87	862.23	08/09/42	43.39	861.71	04/10/43	43.45	861.65
02/16/41	42.36	862.74	12/06/41	42.85	862.25	08/15/42	43.69	861.41	04/17/43	43.70	861.40
02/22/41	42.95	862.15	12/13/41	42.82	862.28	08/23/42	43.61	861.49	04/24/43	43.64	861.46
03/01/41	42.27	862.83	12/20/41	42.81	862.29	09/06/42	42.97	862.13	05/01/43	43.53	861.57
04/20/41	42.19	862.91	12/28/41	42.80	862.30	09/13/42	43.60	861.50	05/08/43	43.60	861.50
04/27/41	42.37	862.73				09/20/42	43.61	861.49	05/15/43	43.68	861.42
05/03/41	42.22	862.88	01/10/42	42.95	862.15	09/27/42	43.53	861.57	05/22/43	43.56	861.54
05/10/41	42.24	862.86	01/17/42	42.93	862.17	10/04/42	43.61	861.49	05/29/43	43.52	861.58
05/17/41	42.33	862.77	01/25/42	42.97	862.13	10/11/42	43.53	861.57	06/05/43	43.35	861.75
05/31/41	42.36	862.74	02/01/42	43.05	862.05	10/17/42	43.01	862.09	06/12/43	43.36	861.74
06/15/41	42.24	862.86	02/07/42	42.88	862.22	10/25/42	43.51	861.59	06/21/43	43.55	861.55

140-048-32CBB2
West Moorhead Aquifer

MP Elev (msl,ft)=901.4
SI (ft.)=0-131

Date	Depth to Water (ft)	WL Elev (msl, ft)
07/17/40	39.24	862.16
07/19/40	39.40	862.00
07/24/40	37.93	863.47
07/30/40	39.26	862.14
08/03/40	38.50	862.90
08/10/40	39.23	862.17
08/17/40	38.19	863.21
08/24/40	38.24	863.16
08/31/40	37.92	863.48
09/07/40	37.84	863.56
09/14/40	37.88	863.52
09/21/40	38.73	862.67
09/28/40	40.19	861.21
10/05/40	37.79	863.61
10/12/40	38.49	862.91
10/19/40	37.73	863.67
10/26/40	37.38	864.02
11/02/40	38.45	862.95
11/09/40	37.38	864.02
11/16/40	37.23	864.17
11/23/40	37.40	864.00
11/30/40	37.07	864.33
12/07/40	37.80	863.60
12/14/40	37.23	864.17
12/28/40	37.26	864.14
01/05/41	38.35	863.05
01/11/41	37.15	864.25
01/18/41	36.86	864.54
01/26/41	37.52	863.88
02/01/41	36.90	864.50
02/08/41	37.47	863.93
02/16/41	38.17	863.23
02/22/41	37.40	864.00
03/01/41	37.15	864.25
03/09/41	37.14	864.26
03/15/41	37.32	864.08
03/23/41	38.29	863.11
03/29/41	37.80	863.60
04/05/41	37.57	863.83
04/12/41	37.60	863.80
04/20/41	39.13	862.27
04/27/41	39.26	862.14
05/03/41	38.94	862.46
05/10/41	38.61	862.79
05/17/41	38.84	862.56
05/24/41	38.53	862.87
05/31/41	39.96	861.44
06/08/41	39.02	862.38
06/15/41	40.03	861.37
06/22/41	41.19	860.21
07/06/41	39.41	861.99
07/26/41	40.83	860.57
08/03/41	42.62	858.78
08/09/41	41.07	860.33
08/16/41	40.86	860.54
08/23/41	40.22	861.18
08/30/41	40.26	861.14
09/06/41	40.22	861.18
09/13/41	39.64	861.76
09/20/41	41.02	860.38
09/28/41	41.12	860.28
10/04/41	40.82	860.58
10/11/41	38.75	862.65
10/18/41	39.16	862.24
10/25/41	38.87	862.53
11/09/41	40.19	861.21
11/15/41	38.42	862.98
11/22/41	38.22	863.18
11/30/41	38.67	862.73
12/06/41	38.38	863.02
12/13/41	39.01	862.39
12/20/41	38.47	862.93
12/28/41	39.22	862.18
01/04/42	43.78	857.62
01/10/42	38.67	862.73
01/17/42	40.23	861.17
02/01/42	39.71	861.69
02/08/42	40.09	861.31
02/15/42	39.38	862.02
02/21/42	39.03	862.37
02/28/42	39.03	862.37
03/07/42	39.89	861.51
03/15/42	39.23	862.17
03/21/42	38.90	862.50
03/28/42	37.96	863.44
04/05/42	38.42	862.98
04/12/42	38.42	862.98
04/18/42	38.29	863.11
04/25/42	39.39	862.01
05/02/42	37.84	863.56
05/09/42	39.03	862.37
05/17/42	39.04	862.36
06/07/42	39.03	862.37
06/21/42	39.04	862.36
06/27/42	39.03	862.37
07/27/42	40.37	861.03

140-049-05BBA
West Fargo North Aquifer

MP Elev (msl,ft)=888.5
SI (ft.)=244-247

Date	Depth to Water (ft)	WL Elev (msl, ft)
09/08/81	82.55	805.95
08/24/82	83.50	805.00
11/17/82	82.66	805.84
04/19/83	82.42	806.08
06/22/83	83.00	805.50
07/28/83	83.17	805.33
08/17/83	83.61	804.89
09/14/83	83.47	805.03
10/11/83	83.13	805.37
11/08/83	83.10	805.40
12/14/83	82.97	805.53
05/15/84	83.10	805.40
06/20/84	83.11	805.39
07/11/84	83.44	805.06
08/08/84	84.13	804.37
09/11/84	84.19	804.31
10/09/84	83.94	804.56
10/30/84	83.41	805.09
12/04/84	83.44	805.06
04/09/85	83.36	805.14
05/04/85	83.35	805.15
06/09/85	83.40	805.10
07/08/85	83.65	804.85
08/18/85	83.86	804.64
09/21/85	83.79	804.71
10/25/85	83.64	804.86
12/07/85	83.81	804.69
05/09/86	83.38	805.12
06/07/86	83.99	804.51
07/04/86	84.13	804.37
08/02/86	84.20	804.30
08/31/86	84.27	804.23
10/11/86	84.11	804.39
11/01/86	84.06	804.44
12/06/86	84.01	804.49
04/25/87	84.02	804.48
05/30/87	84.18	804.32
06/27/87	84.63	803.87
08/01/87	84.65	803.85
08/29/87	84.71	803.79
09/26/87	85.53	802.97
10/30/87	84.53	803.97
11/28/87	84.60	803.90
12/19/87	84.30	804.20
04/02/88	84.25	804.25
04/30/88	84.42	804.08
05/28/88	84.63	803.87
06/24/88	85.10	803.40
07/23/88	85.55	802.95
08/20/88	85.32	803.18
08/25/88	85.38	803.12
09/17/88	85.43	803.07
10/14/88	85.16	803.34
11/05/88	85.15	803.35
12/10/88	85.34	803.16
04/22/89	84.81	803.69
05/13/89	85.23	803.27
06/03/89	85.24	803.26
07/01/89	85.53	802.97
07/30/89	86.29	802.21
09/09/89	85.87	802.63
09/30/89	85.61	802.89
10/28/89	85.79	802.71
11/18/89	85.69	802.81
05/05/90	85.73	802.77
05/26/90	85.84	802.66
06/30/90	85.88	802.62
08/04/90	86.32	802.18
09/01/90	86.50	802.00
09/29/90	86.63	801.87
10/27/90	86.49	802.01
11/17/90	86.38	802.12
12/08/90	86.26	802.24
03/30/91	86.08	802.42
05/11/91	86.19	802.31
06/01/91	86.32	802.18
07/13/91	86.52	801.98
08/09/91	86.81	801.69
08/31/91	86.95	801.55
09/28/91	86.82	801.68
10/19/91	86.83	801.67
11/16/91	86.87	801.63
12/20/91	86.08	802.42
04/17/92	86.60	801.90
05/20/92	86.81	801.69
06/13/92	87.02	801.48
07/26/92	86.96	801.54
08/27/92	87.20	801.30
09/24/92	86.81	801.69
10/17/92	87.19	801.31
11/11/92	86.91	801.59
12/05/92	86.98	801.52
05/01/93	87.03	801.47
06/05/93	87.08	801.42
08/05/93	86.54	801.96
08/28/93	86.95	801.55
09/25/93	86.84	801.66
10/17/93	87.01	801.49
11/11/93	86.94	801.56
04/16/94	86.95	801.55
05/15/94	87.00	801.50
06/11/94	87.19	801.31
07/23/94	87.20	801.30
07/27/94	87.30	801.20
08/20/94	87.44	801.06
09/24/94	87.28	801.22
10/28/94	88.86	799.64
11/26/94	89.30	799.20
04/29/95	89.40	799.10
05/28/95	89.30	799.20
07/01/95	89.84	798.66
08/05/95	89.66	798.84
09/09/95	89.90	798.60
10/27/95	89.17	799.33
11/21/95	89.76	798.74
06/04/96	89.75	798.75
06/30/96	90.01	798.49
07/28/96	90.19	798.31
08/24/96	90.25	798.25
10/05/96	90.08	798.42
11/02/96	89.35	799.15

140-049-08DDA MP Elev (msl,ft)=889.7

West Fargo North Aquifer SI (ft.)=148-151

Date	Depth to Water (ft)	WL Elev (msl, ft)
09/08/81	87.23	803.47
08/24/82	87.88	802.82
11/17/82	87.32	803.38
04/19/83	87.11	803.59
06/22/83	87.63	803.07
07/28/83	87.64	803.06
08/17/83	87.92	802.78
09/14/83	88.03	802.67
10/11/83	87.69	803.01
11/08/83	87.76	802.94
12/14/83	87.20	803.50
04/10/84	87.46	803.24
05/15/84	87.79	802.91
06/20/84	87.82	802.88
07/11/84	88.19	802.51
08/08/84	88.43	802.27
09/11/84	88.77	801.93
10/09/84	88.69	802.01
10/30/84	88.58	802.12
12/04/84	88.35	802.35
04/09/85	88.12	802.58
05/04/85	87.78	802.92
06/09/85	88.23	802.47
07/08/85	88.47	802.23
08/18/85	88.61	802.09
09/21/85	88.52	802.18
10/25/85	88.37	802.33
12/08/85	88.37	802.33
05/11/86	88.30	802.40
06/07/86	88.60	802.10
07/04/86	88.70	802.00
08/02/86	88.89	801.81
08/31/86	88.87	801.83
10/11/86	89.02	801.68
11/01/86	89.23	801.47
12/06/86	89.69	801.01
04/25/87	89.70	801.00
05/30/87	89.65	801.05
06/27/87	89.05	801.65
08/01/87	89.20	801.50
08/29/87	89.33	801.37
09/26/87	89.10	801.60
10/30/87	89.46	801.24
11/28/87	89.46	801.24
12/19/87	89.06	801.64
04/02/88	88.76	801.94
04/29/88	89.02	801.68
05/28/88	89.00	801.70
06/24/88	89.39	801.31
07/23/88	89.93	800.77
08/20/88	89.73	800.97
09/17/88	89.75	800.95
10/14/88	89.58	801.12
11/05/88	89.58	801.12
12/10/88	89.97	800.73
04/22/89	89.38	801.32
05/13/89	89.83	800.87
06/03/89	89.93	800.77
07/01/89	90.08	800.62
07/30/89	90.73	799.97
09/09/89	90.49	800.21
09/30/89	90.13	800.57
10/28/89	90.46	800.24
11/18/89	90.32	800.38
05/05/90	90.52	800.18
05/26/90	90.52	800.18
06/30/90	90.57	800.13
08/04/90	91.09	799.61
09/01/90	91.24	799.46
09/29/90	91.38	799.32
10/27/90	91.26	799.44
11/17/90	91.14	799.56
12/08/90	90.95	799.75
03/30/91	90.77	799.93
05/11/91	90.97	799.73
06/01/91	91.00	799.70
07/13/91	91.32	799.38
08/09/91	91.53	799.17
08/31/91	91.81	798.89
09/27/91	91.61	799.09
09/28/91	91.70	799.00
10/19/91	91.69	799.01
11/16/91	91.67	799.03
12/20/91	91.77	798.93
04/17/92	91.35	799.35
05/20/92	91.46	799.24
06/13/92	91.63	799.07
07/26/92	91.63	799.07
08/27/92	91.78	798.92
09/24/92	91.46	799.24
10/17/92	91.93	798.77
11/11/92	91.64	799.06
12/05/92	91.67	799.03
05/01/93	91.68	799.02
06/05/93	91.73	798.97
08/05/93	91.41	799.29
08/28/93	91.67	799.03
09/25/93	91.60	799.10
10/17/93	91.71	798.99
11/11/93	91.78	798.92
04/16/94	91.68	798.02
05/15/94	91.70	798.00
06/11/94	91.84	797.86
07/23/94	91.97	797.73
08/20/94	92.07	797.63
09/24/94	92.02	797.68
10/28/94	93.47	796.23
11/26/94	94.08	795.62
04/29/95	94.12	795.58
05/28/95	94.05	795.65
07/01/95	94.49	795.21
08/05/95	94.28	795.42
09/09/95	94.66	795.04
10/27/95	93.87	795.83
11/21/95	94.60	795.10
09/24/96	95.10	794.60
10/05/96	94.83	794.87

140-049-17BBB MP Elev (msl,ft)=892.9

West Fargo North Aquifer SI (ft.)=212-215

Date	Depth to Water (ft)	WL Elev (msl, ft)
09/08/81	90.77	802.13
08/24/82	91.37	801.53
11/17/82	90.88	802.02
03/17/83	90.75	802.15
04/19/83	90.73	802.17
06/22/83	91.14	801.76
07/28/83	91.15	801.75
08/17/83	91.40	801.50
09/14/83	91.60	801.30
10/11/83	91.27	801.63
11/08/83	91.30	801.60
12/14/83	91.01	801.89
04/10/84	91.04	801.86
05/15/84	91.35	801.55
06/20/84	91.37	801.53
07/11/84	91.48	801.42
08/08/84	91.70	801.20
09/11/84	92.15	800.75
10/09/84	92.10	800.80
10/30/84	92.04	800.86
12/04/84	91.93	800.97
04/09/85	91.65	801.25
05/04/85	91.10	801.80
06/09/85	91.72	801.18
07/08/85	91.80	801.10
08/18/85	92.02	800.88
09/21/85	91.92	800.98
10/25/85	91.75	801.15
12/08/85	92.14	800.76
05/11/86	91.73	801.17
06/07/86	92.00	800.90
07/04/86	91.80	801.10
08/02/86	92.21	800.69
08/31/86	92.17	800.73
10/11/86	92.41	800.49
11/01/86	92.66	800.24
12/06/86	92.50	800.40
04/25/87	92.25	800.65
05/30/87	92.27	800.63
06/27/87	92.45	800.45
08/01/87	92.48	800.42
08/29/87	92.58	800.32
09/26/87	92.35	800.55
10/30/87	92.80	800.10
11/28/87	92.77	800.13
12/19/87	92.28	800.62
04/02/88	92.25	800.65
04/29/88	92.35	800.55
05/28/88	92.37	800.53
06/24/88	92.74	800.16
07/23/88	93.14	799.76
08/20/88	93.08	799.82
08/25/88	93.15	799.75
09/17/88	93.17	799.73
10/14/88	93.00	799.90
11/05/88	93.16	799.74
12/10/88	93.00	799.90
04/22/89	92.75	800.15
05/13/89	93.15	799.75
06/03/89	93.19	799.71
07/01/89	93.38	799.52
07/30/89	93.94	798.96
09/09/89	93.90	799.00
09/30/89	93.65	799.25
10/28/89	93.90	799.00
11/18/89	93.79	799.11
05/05/90	94.00	798.90
05/26/90	93.98	798.92
06/30/90	94.15	798.75
08/04/90	94.44	798.46
09/01/90	94.55	798.35
09/29/90	94.75	798.15
10/27/90	94.69	798.21
11/17/90	94.54	798.36
12/08/90	94.38	798.52
03/30/91	93.30	799.60
05/11/91	93.50	799.40
06/01/91	94.50	798.40
07/13/91	94.85	798.05
08/09/91	94.87	798.03
08/31/91	95.10	797.80
09/28/91	94.97	797.93
10/19/91	95.07	797.83
11/16/91	95.09	797.81
12/20/91	95.18	797.72
04/17/92	94.82	798.08
05/20/92	94.92	797.98
06/13/92	94.99	797.91
07/26/92	95.14	797.76
08/27/92	95.32	797.58
09/24/92	94.92	797.98
10/17/92	95.46	797.44
11/11/92	95.13	797.77
12/05/92	95.25	797.65
05/01/93	95.28	797.62
06/05/93	95.26	797.64
08/05/93	94.97	797.93
08/28/93	95.21	797.69
09/25/93	95.12	797.78
10/17/93	95.30	797.60
11/11/93	95.27	797.63
04/16/94	95.25	797.65
05/15/94	95.30	797.60
06/11/94	95.29	797.61
07/23/94	95.40	797.50
08/20/94	95.63	797.27
09/24/94	95.59	797.31
10/28/94	94.99	797.91
11/26/94	95.66	797.24
04/29/95	95.68	797.22
05/28/95	95.58	797.32
07/01/95	96.00	796.90
08/05/95	95.57	797.33
09/09/95	96.18	796.72
10/27/95	95.32	797.58
11/21/95	96.15	796.75
09/24/96	96.58	796.32
10/05/96	96.28	796.62
11/02/96	96.60	796.30

140-049-18DDD
West Fargo North Aquifer

MP Elev (msl,ft)=893.13
SI (ft.)=165-170

Date	Depth to Water (ft)	WL Elev (msl, ft)
11/16/91	100.76	792.37
12/20/91	100.95	792.18
04/17/92	100.41	792.72
05/20/92	100.49	792.64
06/13/92	100.46	792.67
07/26/92	100.66	792.47
08/27/92	100.78	792.35
09/24/92	100.34	792.79
10/17/92	101.07	792.06
11/11/92	100.69	792.44
12/05/92	100.85	792.28
05/01/93	100.89	792.24
06/05/93	100.76	792.37
08/05/93	100.80	792.33
08/28/93	100.71	792.42
09/25/93	100.59	792.54
10/17/93	100.86	792.27
11/11/93	100.90	792.23
04/16/94	100.93	792.20
05/15/94	100.83	792.30
06/11/94	100.72	792.41
07/23/94	100.98	792.15
08/20/94	101.12	792.01
09/24/94	101.20	791.93
10/28/94	102.01	791.12
11/26/94	102.78	790.35
04/29/95	102.82	790.31
05/28/95	102.68	790.45
07/01/95	102.93	790.20
08/05/95	102.44	790.69
09/09/95	103.23	789.90
10/27/95	102.39	790.74
11/21/95	103.34	789.79
06/04/96	103.21	789.92
06/30/96	103.39	789.74
07/28/96	103.43	789.70
08/24/96	103.34	789.79
10/05/96	103.33	789.80
11/02/96	103.75	789.38

140-049-19DDD2
West Fargo North Aquifer

MP Elev (msl,ft)=894.9
SI (ft.)=153-156

Date	Depth to Water (ft)	WL Elev (msl, ft)
08/24/82	105.54	789.36
11/17/82	105.39	789.51
03/17/83	105.69	789.21
04/19/83	105.55	789.35
05/24/83	105.62	789.28
06/02/83	105.32	789.58
06/22/83	105.68	789.22
07/28/83	105.59	789.31
08/17/83	105.58	789.32
09/14/83	106.08	788.82
10/11/83	105.80	789.10
11/08/83	105.96	788.94
12/14/83	105.70	789.20
04/10/84	105.62	789.28
05/15/84	105.87	789.03
06/20/84	105.87	789.03
07/11/84	105.68	789.22
08/08/84	105.45	789.45
09/11/84	105.89	789.01
10/09/84	106.15	788.75
10/31/84	105.98	788.92
12/04/84	106.26	788.64
04/09/85	106.00	788.90
05/03/85	105.93	788.97
06/08/85	106.03	788.87
07/08/85	106.01	788.89
08/18/85	106.18	788.72
09/21/85	106.07	788.83
10/25/85	105.97	788.93
12/08/85	106.51	788.39
06/07/86	106.19	788.71
07/04/86	105.62	789.28
08/02/86	106.62	788.28
08/31/86	106.35	788.55
10/11/86	106.76	788.14
11/01/86	107.07	787.83
12/06/86	106.98	787.92
04/25/87	106.71	788.19
05/30/87	106.50	788.40
06/27/87	106.49	788.41
08/01/87	106.52	788.38
08/29/87	106.71	788.19
09/26/87	106.52	788.38
10/30/87	107.06	787.84
11/28/87	107.14	787.76
12/19/87	106.59	788.31
04/02/88	106.66	788.24
04/29/88	106.70	788.20
05/28/88	106.55	788.35
06/24/88	106.59	788.31
07/23/88	106.87	788.03
08/20/88	106.89	788.01
08/25/88	107.02	787.88
09/17/88	106.96	787.94
10/14/88	106.99	787.91
11/05/88	107.27	787.63
12/10/88	108.01	786.89
04/22/89	107.38	787.52
05/13/89	107.69	787.21
06/03/89	107.80	787.10
07/01/89	107.70	787.20
07/30/89	107.92	786.98
09/09/89	108.13	786.77
09/30/89	107.88	787.02
10/28/89	108.38	786.52
11/16/89	108.36	786.54
05/05/90	109.04	785.86
05/26/90	108.92	785.98
06/30/90	109.10	785.80
08/04/90	109.19	785.71
09/01/90	109.18	785.72
09/29/90	109.57	785.33
10/27/90	109.43	785.47
11/17/90	109.43	785.47
12/08/90	109.19	785.71
03/30/91	109.20	785.70
05/11/91	109.35	785.55
06/01/91	109.28	785.62
08/09/91	109.73	785.17
08/31/91	109.98	784.92
09/28/91	109.72	785.18
10/19/91	109.83	785.07
11/16/91	109.97	784.93
12/20/91	110.04	784.86
04/17/92	109.68	785.22
05/20/92	109.59	785.31
06/13/92	109.57	785.33
07/26/92	109.74	785.16
08/27/92	109.88	785.02
09/24/92	109.42	785.48
10/17/92	110.10	784.80
11/11/92	109.78	785.12
12/05/92	109.98	784.92
05/01/93	110.12	784.78
06/05/93	109.93	784.97
08/05/93	110.07	784.83
08/28/93	110.10	784.80
09/25/93	109.92	784.98
10/17/93	110.13	784.77
11/11/93	110.10	784.80
04/16/94	110.04	784.86
05/15/94	110.11	784.79
06/11/94	109.98	784.92
07/23/94	110.20	784.70

140-049-19DDD4
West Fargo North Aquifer

MP Elev (msl,ft)=897.08
SI (ft.)=153-158

Date	Depth to Water (ft)	WL Elev (msl, ft)
09/24/94	112.12	784.96
10/28/94	111.84	785.24
11/26/94	112.58	784.50
04/29/95	112.72	784.36
05/28/95	113.68	783.40
07/01/95	112.78	784.30
08/05/95	112.45	784.63
09/09/95	113.06	784.02
10/27/95	112.24	784.84
11/21/95	113.23	783.85
06/04/96	113.29	783.79
06/30/96	113.30	783.78
07/28/96	113.51	783.57
08/24/96	113.35	783.73
10/05/96	113.30	783.78
11/02/96	113.73	783.35

140-049-29DDD
West Fargo North Aquifer

MP Elev (msl,ft)=893.3
SI (ft.)=0-210.7

Date	Depth to Water (ft)	WL Elev (msl, ft)
08/19/63	92.80	800.50
09/17/63	93.17	800.13
09/24/63	93.20	800.10
10/22/63	93.38	799.92
11/01/63	93.96	799.34
12/21/63	94.21	799.09
01/14/64	93.69	799.61
04/01/64	93.32	799.98
05/05/64	93.35	799.95
05/27/64	94.10	799.20
06/28/64	93.89	799.41
07/30/64	94.41	798.89
08/24/64	94.27	799.03
09/30/64	93.01	800.29
11/02/64	93.18	800.12
12/09/64	92.98	800.32
04/14/65	93.83	799.47
05/10/65	94.20	799.10
06/11/65	94.53	798.77
07/13/65	94.50	798.80
08/03/65	94.63	798.67
07/11/67	97.18	796.12
07/23/68	98.37	794.93
07/14/69	99.57	793.73
12/03/69	101.12	792.18
12/01/70	101.50	791.80
11/30/71	103.00	790.30
12/04/72	105.32	787.98
12/05/73	104.78	788.52
12/02/74	106.58	786.72
12/04/75	106.07	787.23
11/29/76	108.05	785.25
12/01/77	101.43	791.87
02/23/81	107.60	785.70
04/28/81	107.10	786.20
06/10/81	108.90	784.40
07/22/81	107.40	785.90

140-049-30ADD1
West Fargo North Aquifer

MP Elev (msl,ft)=895.84
SI (ft.)=156-161

Date	Depth to Water (ft)	WL Elev (msl, ft)
12/20/91	115.36	780.48
04/17/92	115.25	780.59
05/20/92	115.25	780.59
06/13/92	115.21	780.63
07/26/92	115.16	780.68
08/27/92	115.39	780.45
09/24/92	115.07	780.77
06/05/93	115.39	780.45
08/05/93	115.75	780.09
08/28/93	115.69	780.15
09/25/93	115.50	780.34
10/17/93	115.76	780.08
11/11/93	115.71	780.13
04/16/94	116.61	779.23
05/15/94	115.71	780.13
06/11/94	115.62	780.22
07/24/94	115.85	779.99
08/20/94	115.87	779.97
09/24/94	116.00	779.84
10/28/94	115.40	780.44
11/26/94	116.16	779.68
04/29/95	116.05	779.79
05/28/95	116.14	779.70
07/01/95	116.32	779.52
08/05/95	116.05	779.79
09/09/95	116.55	779.29
10/27/95	116.35	779.49
11/21/95	115.94	779.90
06/04/96	116.80	779.04
06/30/96	116.78	779.06
07/28/96	116.83	779.01
08/24/96	116.35	779.49
10/05/96	116.90	778.94
11/02/96	116.67	779.17

140-049-30ADD2
West Fargo North Aquifer

MP Elev (msl,ft)=896.48
SI (ft.)=198-208

Date	Depth to Water (ft)	WL Elev (msl, ft)
11/16/91	115.76	780.72
12/20/91	116.19	780.29
04/17/92	115.68	780.80
05/20/92	115.74	780.74
06/13/92	115.69	780.79
07/26/92	115.84	780.64
08/27/92	115.95	780.53
09/24/92	115.51	780.97
10/17/92	116.24	780.24
11/11/92	115.84	780.64
12/05/92	116.05	780.43
05/01/93	116.26	780.22
06/05/93	116.08	780.40
08/05/93	116.21	780.27
08/28/93	116.13	780.35
09/25/93	115.99	780.49
10/17/93	116.23	780.25
11/11/93	116.23	780.25
04/16/94	116.36	780.12
05/15/94	116.39	780.09
06/11/94	116.12	780.36
07/23/94	116.37	780.11
08/20/94	115.49	780.99
09/24/94	116.57	779.91
10/28/94	115.93	780.55
11/26/94	116.67	779.81
04/29/95	116.80	779.68
05/28/95	116.66	779.82
07/01/95	116.96	779.52
08/05/95	116.44	780.04
09/09/95	117.12	779.36
10/27/95	116.32	780.16
11/21/95	117.31	779.17
06/04/96	117.43	779.05
06/30/96	117.50	778.98
07/28/96	117.68	778.80
08/24/96	117.46	779.02
10/05/96	117.50	778.98
11/02/96	117.95	778.53

140-049-32BBB
West Fargo North Aquifer

MP Elev (msl,ft)=898.3
SI (ft.)=174-228

Date	Depth to Water (ft)	WL Elev (msl, ft)
08/19/63	99.31	798.99
09/17/63	99.66	798.64
09/24/63	99.63	798.67
10/22/63	99.72	798.58
11/01/63	100.53	797.77
12/02/63	100.70	797.60
01/14/64	100.05	798.25
04/01/64	99.72	798.58
05/05/64	101.40	796.90
05/27/64	100.85	797.45
06/28/64	100.75	797.55
07/30/64	100.91	797.39
08/24/64	100.81	797.49
09/30/64	101.35	796.95
11/02/64	101.54	796.76
12/09/64	101.39	796.91
01/18/65	102.34	795.96
02/12/65	102.10	796.20
03/15/65	102.22	796.08
04/14/65	102.24	796.06
05/10/65	102.63	795.67
06/11/65	103.02	795.28
07/13/65	102.89	795.41
08/03/65	102.99	795.31
09/14/65	103.24	795.06
10/21/65	104.21	794.09
11/16/65	104.20	794.10
12/14/65	104.05	794.25
01/11/66	104.45	793.85
02/08/66	103.93	794.37
04/14/66	104.47	793.83
05/10/66	104.12	794.18
06/14/66	104.16	794.14
07/22/66	104.26	794.04
08/17/66	104.02	794.28
09/28/66	103.75	794.55
10/26/66	104.74	793.56
12/03/66	105.60	792.70
12/28/66	104.82	793.48
01/26/67	105.51	792.79
03/02/67	104.90	793.40
03/22/67	105.34	792.96
04/28/67	105.14	793.16
05/25/67	105.13	793.17
06/22/67	105.57	792.73
07/11/67	105.74	792.56
08/17/67	105.90	792.40
10/13/67	105.85	792.45
11/09/67	106.37	791.93
12/05/67	106.34	791.96
01/23/68	106.87	791.43
03/06/68	106.89	791.41
04/02/68	106.96	791.34
05/01/68	106.63	791.67
05/28/68	106.82	791.48
06/26/68	107.08	791.22
07/23/68	106.90	791.40
08/21/68	106.86	791.44
09/18/68	106.86	791.44
10/15/68	106.71	791.59
11/14/68	107.21	791.09
12/10/68	107.29	791.01
02/13/69	107.89	790.41
03/04/69	108.11	790.19
04/30/69	107.69	790.61
06/02/69	107.98	790.32
06/24/69	107.72	790.58
07/14/69	108.08	790.22
08/20/69	108.67	789.63
09/16/69	109.06	789.24
10/14/69	109.02	789.28
11/13/69	109.27	789.03
12/03/69	109.75	788.55
01/05/70	109.96	788.34
02/06/70	110.08	788.22
03/06/70	110.08	788.22
05/06/70	110.02	788.28
05/23/70	110.14	788.16
06/24/70	110.39	787.91
07/22/70	109.68	788.62
08/18/70	110.01	788.29
09/15/70	110.65	787.65
10/15/70	110.98	787.32
11/12/70	110.70	787.60
12/01/70	110.07	788.23
01/14/71	111.01	787.29
02/11/71	110.75	787.55
03/09/71	110.76	787.54
04/03/71	111.17	787.13
04/29/71	110.92	787.38
06/07/71	110.95	787.35
07/09/71	111.17	787.13
08/04/71	111.25	787.05
08/31/71	110.90	787.40
10/05/71	111.09	787.21
11/02/71	110.90	787.40
11/30/71	111.53	786.77
01/04/72	111.45	786.85
02/09/72	112.06	786.24
03/10/72	111.38	786.92
04/13/72	111.40	786.90
05/02/72	111.65	786.65
06/05/72	111.78	786.52
07/06/72	111.95	786.35
08/08/72	110.84	787.46
09/06/72	111.32	786.98
10/04/72	112.42	785.88
10/31/72	111.32	786.98
12/04/72	112.93	785.37
03/01/73	113.16	785.14
04/03/73	113.19	785.11
05/01/73	113.05	785.25
06/11/73	112.99	785.31
07/13/73	112.96	785.34
08/28/73	112.95	785.35
10/04/73	113.28	785.02
11/06/73	113.58	784.72
12/05/73	113.34	784.96
01/10/74	113.63	784.67
02/12/74	113.05	785.25
03/13/74	113.48	784.82
04/02/74	113.37	784.93
06/03/74	113.52	784.78
09/10/74	113.93	784.37
12/02/74	114.62	783.68
03/19/75	114.07	784.23
06/16/75	114.17	784.13
09/25/75	114.89	783.41
12/04/75	114.65	783.65
03/11/76	115.34	782.96
06/01/76	115.28	783.02
09/10/76	115.99	782.31
11/29/76	116.47	781.83
03/09/77	116.02	782.28
06/13/77	116.43	781.87
09/19/77	116.57	781.73
12/01/77	116.20	782.10
03/14/78	116.61	781.69
06/19/78	116.15	782.15
09/20/78	116.77	781.53
11/20/78	117.26	781.04
03/20/79	115.95	782.35
06/18/79	115.70	782.60
09/17/79	115.40	782.90
11/27/79	115.27	783.03
03/21/80	115.32	782.98
05/22/80	114.94	783.36
06/21/80	115.10	783.20
07/15/80	115.09	783.21
08/12/80	115.32	782.98
09/08/80	115.45	782.85
10/08/80	115.57	782.73
11/17/80	116.04	782.26
02/23/81	115.68	782.62
04/28/81	116.05	782.25
06/10/81	115.95	782.35
07/22/81	116.21	782.09
09/01/81	116.25	782.05
10/07/81	116.36	781.94
12/03/81	116.27	782.03
03/29/82	115.91	782.39
05/20/82	116.42	781.88
06/30/82	116.64	781.66
08/23/82	116.59	781.71
08/24/82	116.29	782.01
10/27/82	116.28	782.02
10/30/82	116.54	781.76
11/17/82	116.51	781.79
11/21/82	117.21	781.09
03/17/83	116.73	781.57
04/18/83	116.61	781.69
05/19/83	116.48	781.82
05/24/83	117.30	781.00
06/02/83	116.36	781.94
06/08/83	116.42	781.88
06/22/83	116.73	781.57
07/28/83	116.65	781.65
08/17/83	116.60	781.70
09/14/83	117.09	781.21
10/11/83	116.89	781.41
12/14/83	116.68	781.62
04/10/84	116.57	781.73
05/15/84	116.79	781.51
06/20/84	116.64	781.66
07/11/84	116.50	781.80
08/08/84	116.32	781.98
09/11/84	116.73	781.57
10/09/84	117.00	781.30
10/31/84	116.84	781.46
12/04/84	117.09	781.21
04/09/85	116.80	781.50
05/03/85	116.65	781.65
06/07/85	116.50	781.80
07/08/85	116.80	781.50
08/18/85	116.94	781.36
09/21/85	116.80	781.50
10/25/85	116.68	781.62
12/08/85	117.15	781.15
05/09/86	116.77	781.53
06/06/86	116.71	781.59
07/04/86	116.20	782.10
08/02/86	117.28	781.02
08/31/86	116.95	781.35
10/11/86	117.37	780.93
11/01/86	117.70	780.60
12/06/86	117.55	780.75
04/24/87	117.19	781.11
05/30/87	117.06	781.24
06/27/87	116.30	782.00
07/31/87	116.94	781.36
08/29/87	117.21	781.09
09/26/87	117.03	781.27
10/30/87	117.58	780.72
11/28/87	117.56	780.74
12/19/87	116.98	781.32
04/01/88	117.36	780.94
04/29/88	117.15	781.15
05/28/88	117.13	781.17
06/15/88	117.61	780.69
06/24/88	117.15	781.15
07/23/88	117.47	780.83
08/20/88	117.50	780.80
09/17/88	117.63	780.67
10/14/88	117.66	780.64
11/05/88	117.94	780.36
12/10/88	118.21	780.09
04/22/89	118.18	780.12
05/13/89	118.55	779.75
06/03/89	118.69	779.61
07/01/89	118.64	779.66
07/30/89	118.93	779.37
09/09/89	119.18	779.12
09/30/89	118.85	779.45
10/28/89	119.48	778.82
11/18/89	119.42	778.88
05/05/90	120.25	778.05
05/25/90	120.07	778.23
06/30/90	120.36	777.94
08/04/90	120.54	777.76
09/01/90	120.52	777.78
09/29/90	120.79	777.51
10/27/90	120.76	777.54
11/17/90	120.55	777.75
12/08/90	120.40	777.90
03/30/91	120.36	777.94
05/11/91	120.69	777.61
06/01/91	120.57	777.73
07/13/91	120.87	777.43
08/09/91	120.85	777.45
08/31/91	121.01	777.29
09/28/91	120.91	777.39
10/19/91	121.03	777.27
11/16/91	121.12	777.18
12/20/91	121.30	777.00
04/17/92	120.80	777.50
05/20/92	120.85	777.45
06/13/92	120.81	777.49
07/26/92	120.97	777.33
08/27/92	121.12	777.18
09/24/92	120.63	777.67
10/17/92	121.36	776.94
11/11/92	120.97	777.33
12/05/92	121.03	777.27
05/01/93	121.41	776.89
06/05/93	121.24	777.06
08/05/93	121.38	776.92
08/28/93	121.24	777.06
09/25/93	121.08	777.22
10/17/93	121.32	776.98
11/11/93	121.33	776.97
04/16/94	121.48	776.82
05/15/94	121.53	776.77
06/11/94	121.21	777.09
07/24/94	121.50	776.80
08/20/94	121.68	776.62
09/24/94	121.68	776.62
10/28/94	121.04	777.26
11/26/94	121.76	776.54
04/29/95	122.00	776.30
05/28/95	121.86	776.44
07/01/95	122.08	776.22
08/05/95	121.70	776.60
09/09/95	122.37	775.93
10/27/95	121.57	776.73
11/21/95	122.54	775.76
06/04/96	122.71	775.59
06/30/96	122.88	775.42

140-049-32BBB (Continued) MP Elev (msl,ft)=898.3
West Fargo North Aquifer SI (ft.)=174-228

Date	Depth to Water (ft)	WL Elev (msl, ft)	Date	Depth to Water (ft)	WL Elev (msl, ft)	Date	Depth to Water (ft)	WL Elev (msl, ft)	Date	Depth to Water (ft)	WL Elev (msl, ft)
07/28/96	122.96	775.34	08/24/96	122.82	775.48	10/05/96	122.74	775.56	11/02/96	123.14	775.16

140-049-32BBB2 MP Elev (msl,ft)=898
Till Aquifer SI (ft.)=127-130

Date	Depth to Water (ft)	WL Elev (msl, ft)	Date	Depth to Water (ft)	WL Elev (msl, ft)	Date	Depth to Water (ft)	WL Elev (msl, ft)	Date	Depth to Water (ft)	WL Elev (msl, ft)
06/15/83	59.56	838.44	06/06/86	113.32	784.68	09/09/89	114.90	783.10			
06/16/83	81.83	816.17	07/04/86	113.45	784.55	09/30/89	114.91	783.09	05/01/93	117.40	780.60
06/17/83	84.63	813.37	08/02/86	113.55	784.45	10/28/89	114.99	783.01	06/05/93	117.34	780.66
06/22/83	95.08	802.92	08/31/86	113.64	784.36	11/18/89	115.02	782.98	08/05/93	117.25	780.75
06/28/83	105.00	793.00	10/11/86	113.73	784.27				08/28/93	117.27	780.73
07/11/83	100.25	797.75	11/01/86	113.70	784.30	05/05/90	115.63	782.37	09/25/93	117.35	780.65
07/28/83	100.89	797.11	12/06/86	113.74	784.26	05/25/90	115.64	782.36	10/17/93	117.40	780.60
08/17/83	109.44	788.56				06/30/90	115.64	782.36	11/11/93	117.63	780.37
09/14/83	110.73	787.27	04/24/87	113.74	784.26	08/04/90	116.77	781.23			
09/29/83	111.11	786.89	05/30/87	113.83	784.17	09/01/90	115.94	782.06	04/16/94	117.60	780.40
10/11/83	111.37	786.63	06/27/87	113.83	784.17	09/29/90	115.85	782.15	05/15/94	117.58	780.42
11/08/83	111.74	786.26	07/31/87	113.85	784.15	10/27/90	115.93	782.07	06/11/94	117.68	780.32
12/14/83	112.01	785.99	08/29/87	113.88	784.12	11/17/90	116.15	781.85	07/24/94	117.70	780.30
			09/26/87	113.90	784.10	12/08/90	116.15	781.85	08/20/94	117.62	780.38
04/10/84	112.33	785.67	10/30/87	114.00	784.00				09/24/94	117.79	780.21
05/15/84	112.38	785.62	11/28/87	114.09	783.91	03/30/91	116.33	781.67	10/28/94	117.70	780.30
06/20/84	112.36	785.64	12/19/87	114.01	783.99	05/11/91	116.59	781.41	11/26/94	117.76	780.24
07/11/84	112.46	785.54				06/01/91	116.56	781.44			
08/08/84	112.61	785.39	04/01/88	114.07	783.93	07/13/91	116.94	781.06	04/29/95	117.90	780.10
09/11/84	112.77	785.23	04/29/88	114.10	783.90	08/09/91	116.83	781.17	05/28/95	117.85	780.15
10/09/84	112.85	785.15	05/28/88	114.12	783.88	08/31/91	116.76	781.24	07/01/95	117.90	780.10
10/31/84	112.77	785.23	06/24/88	114.17	783.83	09/28/91	116.75	781.25	08/05/95	117.86	780.14
12/04/84	112.75	785.25	07/23/88	114.29	783.71	10/19/91	116.80	781.20	09/09/95	118.08	779.92
			08/20/88	114.30	783.70	11/16/91	116.81	781.19	10/27/95	118.02	779.98
04/09/85	112.89	785.11	09/17/88	114.38	783.62	12/20/91	116.90	781.10	11/21/95	118.39	779.61
05/03/85	112.97	785.03	10/14/88	114.38	783.62						
06/07/85	112.99	785.01	11/05/88	114.44	783.56	04/17/92	117.01	780.99	06/04/96	118.64	779.36
07/08/85	113.00	785.00	12/10/88	114.84	783.16	05/20/92	117.19	780.81	06/30/96	118.66	779.34
08/18/85	113.05	784.95				06/13/92	117.33	780.67	07/28/96	118.77	779.23
09/21/85	113.23	784.77	04/22/89	114.60	783.40	07/27/92	117.40	780.60	08/24/96	118.84	779.16
10/25/85	113.27	784.73	05/13/89	114.68	783.32	08/27/92	117.47	780.53	10/05/96	118.80	779.20
12/08/85	113.35	784.65	06/03/89	114.72	783.28	09/24/92	117.52	780.48	11/02/96	118.85	779.15
			07/01/89	114.72	783.28	10/17/92	117.45	780.55	11/13/96	118.85	779.15
05/09/86	113.33	784.67	07/30/89	114.83	783.17	11/11/92	117.38	780.62			

140-049-32BBB3 MP Elev (msl,ft)=897.7
Till Aquifer SI (ft.)=97-100

Date	Depth to Water (ft)	WL Elev (msl, ft)	Date	Depth to Water (ft)	WL Elev (msl, ft)	Date	Depth to Water (ft)	WL Elev (msl, ft)	Date	Depth to Water (ft)	WL Elev (msl, ft)
06/15/83	48.05	849.65	06/16/83	85.92	811.78	06/17/83	92.70	805.00			

140-049-33ABB
West Fargo North Aquifer

MP Elev (msl,ft)=893.3
SI (ft.)=184-189

Date	Depth to Water (ft)	WL Elev (msl, ft)
10/27/82	107.55	785.75
11/17/82	107.87	785.43
04/18/83	108.03	785.27
05/19/83	107.90	785.40
05/24/83	108.08	785.22
05/25/83	108.28	785.02
06/02/83	107.77	785.53
06/08/83	107.89	785.41
06/22/83	108.14	785.16
07/28/83	108.09	785.21
08/17/83	108.07	785.23
09/14/83	108.54	784.76
10/11/83	108.30	785.00
11/08/83	108.40	784.90
12/14/83	108.31	784.99
04/10/84	107.99	785.31
05/15/84	108.22	785.08
06/20/84	108.08	785.22
07/12/84	108.00	785.30
08/08/84	107.89	785.41
09/11/84	108.32	784.98
10/09/84	108.55	784.75
10/31/84	108.38	784.92
12/04/84	108.58	784.72
04/09/85	108.30	785.00
05/05/85	108.11	785.19
06/07/85	108.04	785.26
07/08/85	108.40	784.90
08/18/85	108.59	784.71
09/21/85	108.45	784.85
10/25/85	108.34	784.96
12/08/85	108.65	784.65
05/09/86	108.29	785.01
06/06/86	108.35	784.95
07/04/86	107.60	785.70
08/02/86	108.96	784.34
08/31/86	108.70	784.60
10/11/86	109.03	784.27
11/02/86	109.02	784.28
12/07/86	109.01	784.29
04/24/87	108.93	784.37
05/31/87	108.69	784.61
06/27/87	108.80	784.50
07/31/87	108.74	784.56
08/29/87	109.99	783.31
09/26/87	108.70	784.60
10/31/87	109.33	783.97
11/28/87	109.32	783.98
04/01/88	109.15	784.15
04/29/88	108.94	784.36
05/28/88	108.93	784.37
06/24/88	108.92	784.38
07/23/88	109.31	783.99
08/20/88	109.34	783.96
09/01/88	109.55	783.75
09/17/88	109.48	783.82
10/14/88	109.50	783.80
11/05/88	109.73	783.57
12/10/88	110.41	782.89
04/22/89	109.77	783.53
05/13/89	110.12	783.18
06/03/89	110.25	783.05
07/01/89	110.19	783.11
07/30/89	110.54	782.76
09/09/89	110.75	782.55
09/30/89	110.37	782.93
10/28/89	110.97	782.33
11/18/89	110.93	782.37
05/05/90	111.52	781.78
05/25/90	111.00	782.30
06/30/90	111.63	781.67
08/04/90	111.84	781.46
09/01/90	111.85	781.45
09/29/90	112.14	781.16
10/27/90	112.10	781.20
11/17/90	111.93	781.37
12/09/90	111.86	781.44
03/30/91	111.66	781.64
05/11/91	111.96	781.34
06/01/91	111.01	782.29
07/13/91	112.17	781.13
08/09/91	112.15	781.15
08/31/91	112.36	780.94
09/28/91	112.25	781.05
10/19/91	112.36	780.94
11/16/91	112.42	780.88
12/20/91	112.61	780.69
04/17/92	112.02	781.28
05/20/92	112.12	781.18
06/13/92	112.09	781.21
07/26/92	112.30	781.00
08/27/92	112.41	780.89
09/24/92	111.95	781.35
10/17/92	112.72	780.58
11/11/92	111.99	781.31
12/05/92	112.41	780.89
05/01/93	112.67	780.63
08/05/93	112.63	780.67
08/28/93	112.50	780.80
09/25/93	112.34	780.96
10/17/93	112.59	780.71
11/11/93	112.67	780.63
04/16/94	112.77	780.53
05/15/94	112.76	780.54
06/11/94	112.51	780.79
07/24/94	112.80	780.50
08/20/94	112.98	780.32

140-049-34ABB2
Nodak Aquifer

MP Elev (msl,ft)=897.6
SI (ft.)=163-168

Date	Depth to Water (ft)	WL Elev (msl, ft)
10/27/82	96.06	801.54
11/17/82	95.96	801.64
03/17/83	96.00	801.60
04/18/83	96.22	801.38
05/19/83	96.30	801.30
05/24/83	96.36	801.24
05/25/83	96.45	801.15
06/02/83	96.35	801.25
06/08/83	96.50	801.10
06/22/83	96.66	800.94
07/28/83	96.98	800.62
08/17/83	97.60	800.00
09/14/83	98.24	799.36
10/11/83	98.23	799.37
11/08/83	98.19	799.41
12/14/83	98.03	799.57
04/10/84	99.08	798.52
05/15/84	99.42	798.18
06/20/84	99.64	797.96
07/12/84	100.07	797.53
08/08/84	100.61	796.99
09/11/84	101.25	796.35
10/09/84	101.25	796.35
10/31/84	100.83	796.77
12/04/84	100.75	796.85
04/09/85	100.68	796.92
05/05/85	100.69	796.91
06/07/85	100.82	796.78
07/08/85	101.40	796.20
08/18/85	102.05	795.55
09/21/85	102.01	795.59
10/25/85	101.73	795.87
12/06/85	101.62	795.98
05/09/86	101.48	796.12
06/06/86	101.84	795.76
07/04/86	102.14	795.46
08/02/86	102.58	795.02
08/31/86	102.66	794.94
10/11/86	102.60	795.00
11/02/86	102.57	795.03
12/07/86	102.34	795.26
04/24/87	101.85	795.75
05/31/87	102.28	795.32
06/27/87	102.99	794.61
07/31/87	103.58	794.02
08/29/87	103.90	793.70
09/26/87	103.89	793.71
10/31/87	103.96	793.64
11/28/87	103.74	793.86
12/19/87	103.35	794.25
04/01/88	103.07	794.53
04/29/88	102.99	794.61
05/28/88	103.28	794.32
06/24/88	103.78	793.82
07/23/88	104.61	792.99
08/20/88	104.88	792.72
09/01/88	105.23	792.37
09/17/88	105.20	792.40
10/14/88	105.09	792.51
11/05/88	104.86	792.74
12/10/88	104.76	792.84
04/22/89	104.18	793.42
05/13/89	104.42	793.18
06/03/89	104.55	793.05
07/01/89	104.83	792.77
07/30/89	105.70	791.90
09/09/89	105.87	791.73
09/30/89	105.67	791.93
10/28/89	105.62	791.98
11/18/89	105.30	792.30
05/05/90	104.13	793.47
05/25/90	104.21	793.39
06/30/90	105.20	792.40
08/04/90	106.02	791.58
09/01/90	106.25	791.35
09/29/90	106.34	791.26
10/27/90	106.05	791.55
11/17/90	105.83	791.77
12/09/90	105.37	792.23
03/30/91	104.70	792.90
05/11/91	104.97	792.63
06/01/91	104.92	792.68
07/13/91	105.28	792.32
08/09/91	105.38	792.22
08/31/91	105.82	791.78
09/28/91	105.85	791.75
10/19/91	105.92	791.68
11/16/91	105.99	791.61
12/20/91	105.97	791.63
04/17/92	105.68	791.92
05/20/92	105.84	791.76
06/13/92	106.06	791.54
07/26/92	106.21	791.39
08/27/92	106.36	791.24
09/24/92	106.08	791.52
10/17/92	106.33	791.27
11/11/92	106.05	791.55
12/05/92	105.95	791.65
05/01/93	105.26	792.34
06/05/93	105.39	792.21
08/05/93	105.90	791.70
08/28/93	106.14	791.46
09/25/93	106.37	791.23
10/17/93	106.72	790.88
11/11/93	106.50	791.10
04/16/94	106.13	791.47
05/15/94	106.19	791.41
06/11/94	106.37	791.23
07/24/94	106.70	790.90
08/20/94	106.90	790.70

140-049-34ABB3
Nodak Aquifer

MP Elev (msl,ft)=897.05
SI (ft.)=163-168

Date	Depth to Water (ft)	WL Elev (msl, ft)
09/24/94	107.30	789.75
10/28/94	107.10	789.95
11/26/94	107.49	789.56
04/30/95	107.07	789.98
05/26/95	106.97	790.08
07/01/95	107.47	789.58
08/05/95	107.54	789.51
09/09/95	108.01	789.04
10/27/95	107.22	789.83
11/23/95	107.36	789.69
06/04/96	106.15	790.90
06/30/96	106.95	790.10
07/28/96	107.28	789.77
08/24/96	107.74	789.31
10/05/96	108.09	788.96
11/02/96	108.05	789.00

140-049-34BBB MP Elev (msl,ft)=895.08

West Fargo North Aquifer SI (ft.)=165-170

Date	Depth to Water (ft)	WL Elev (msl, ft)
11/16/91	112.23	782.85
12/20/91	113.24	781.84
04/17/92	113.73	781.35
05/20/92	112.89	782.19
06/13/92	112.90	782.18
07/26/92	113.08	782.00
08/27/92	113.21	781.87
09/24/92	112.75	782.33
10/17/92	113.44	781.64
11/11/92	113.07	782.01
12/05/92	113.13	781.95
05/01/93	113.32	781.76
08/05/93	113.37	781.71
08/28/93	113.28	781.80
09/25/93	113.17	781.91
10/17/93	113.40	781.68
11/11/93	113.40	781.68
04/16/94	113.49	781.59
05/15/94	113.52	781.56
06/11/94	113.31	781.77
07/24/94	113.60	781.48
08/20/94	113.72	781.36
09/24/94	113.79	781.29
10/28/94	113.14	781.94
11/26/94	113.81	781.27
04/30/95	113.97	781.11
05/28/95	113.80	781.28
07/01/95	114.08	781.00
08/05/95	113.95	781.13
09/09/95	114.43	780.65
10/27/95	113.62	781.46
11/23/95	114.39	780.69
06/04/96	114.47	780.61
06/30/96	114.69	780.39
07/28/96	114.83	780.25
08/24/96	114.74	780.34
10/05/96	114.69	780.39
11/02/96	115.01	780.07

140-049-34CCCA MP Elev (msl,ft)=901.6

Undefined Aquifer SI (ft.)=8-18

Date	Depth to Water (ft)	WL Elev (msl, ft)
08/11/94	7.05	894.55
09/09/94	7.37	894.23
09/20/94	7.32	894.28
10/06/94	7.46	894.14

140-049-35BAA MP Elev (msl,ft)=900.7

Nodak Aquifer SI (ft.)=171-176

Date	Depth to Water (ft)	WL Elev (msl, ft)
11/17/82	94.53	806.17
03/17/83	94.23	806.47
04/18/83	94.34	806.36
05/19/83	94.31	806.39
05/24/83	94.33	806.37
05/25/83	94.32	806.38
06/02/83	94.35	806.35
06/08/83	94.37	806.33
06/22/83	94.44	806.26
07/28/83	94.64	806.06
08/17/83	94.71	805.99
09/14/83	94.71	805.99
10/11/83	95.09	805.61
11/08/83	95.23	805.47
12/14/83	95.40	805.30
04/10/84	95.92	804.78
05/15/84	96.14	804.56
06/20/84	96.36	804.34
09/11/84	96.99	803.71
10/09/84	97.22	803.48
10/31/84	97.33	803.37
12/04/84	97.55	803.15
04/09/85	98.11	802.59
05/05/85	98.10	802.60
06/07/85	98.30	802.40
07/08/85	98.44	802.26
08/18/85	98.70	802.00
09/21/85	98.90	801.80
10/25/85	99.08	801.62
12/06/85	99.25	801.45
05/09/86	99.25	801.45
06/06/86	99.91	800.79
07/04/86	99.94	800.76
08/02/86	100.08	800.62
08/31/86	100.16	800.54
10/11/86	100.34	800.36
11/02/86	100.48	800.22
12/07/86	100.54	800.16
04/24/87	100.71	799.99
05/31/87	100.80	799.90
06/27/87	100.85	799.85
07/31/87	100.99	799.71
08/29/87	101.10	799.60
09/26/87	101.28	799.42
10/31/87	101.45	799.25
11/28/87	101.56	799.14
12/19/87	101.56	799.14
04/01/88	101.86	798.84
04/29/88	101.83	798.87
05/28/88	101.88	798.82
06/24/88	101.98	798.72
07/23/88	102.15	798.55
08/20/88	102.25	798.45
09/01/88	102.31	798.39
09/17/88	105.10	795.60
10/14/88	104.97	795.73
11/05/88	104.75	795.95
12/10/88	104.35	796.35
04/22/89	103.77	796.93
05/13/89	103.82	796.88
06/03/89	103.89	796.81
07/01/89	104.02	796.68
07/30/89	104.32	796.38
09/09/89	104.43	796.27
09/30/89	104.84	795.86
10/26/89	104.95	795.75
11/18/89	104.98	795.72
05/05/90	103.22	797.48
05/25/90	103.45	797.25
06/30/90	103.94	796.76
08/04/90	104.35	796.35
09/01/90	104.73	795.97
09/29/90	105.02	795.68
10/27/90	105.17	795.53
11/17/90	105.24	795.46
12/09/90	105.15	795.55
03/30/91	103.90	796.80
05/11/91	104.02	796.68
06/01/91	104.20	796.50
07/13/91	104.30	796.40
08/09/91	104.35	796.35
08/31/91	104.45	796.25
09/28/91	104.37	796.33
06/13/92	104.98	795.72
07/26/92	105.11	795.59
08/27/92	105.23	795.47
09/24/92	105.30	795.40
10/17/92	105.34	795.36
11/11/92	105.38	795.32
12/05/92	105.36	795.34
05/01/93	104.91	795.79
06/05/93	104.79	795.91
08/05/93	103.90	796.80
08/28/93	104.18	796.52
09/25/93	104.40	796.30
10/17/93	106.01	794.69
11/11/93	105.97	794.73
04/16/94	105.48	795.22
05/15/94	105.51	795.19
06/11/94	105.80	794.90
07/24/94	106.19	794.51
08/20/94	106.40	794.30
09/24/94	106.42	794.28
10/28/94	106.32	794.38
11/26/94	106.58	794.12
04/30/95	106.07	794.63
05/28/95	106.00	794.70
07/01/95	106.54	794.16
08/05/95	106.70	794.00
09/09/95	107.12	793.58
10/27/95	106.44	794.26
11/23/95	106.03	794.67
06/04/96	104.92	795.78
06/30/96	105.25	795.45
07/28/96	106.02	794.68
08/24/96	106.74	793.96
10/05/96	107.16	793.54
11/02/96	107.06	793.64

140-049-35CA MP Elev (msl,ft)=897

Undefined Aquifer SI (ft.)=0-70

Date	Depth to Water (ft)	WL Elev (msl, ft)	Date	Depth to Water (ft)	WL Elev (msl, ft)	Date	Depth to Water (ft)	WL Elev (msl, ft)	Date	Depth to Water (ft)	WL Elev (msl, ft)
07/16/40	8.85	888.15	02/16/41	8.27	888.73	11/01/41	8.02	888.98	06/21/42	5.51	891.49
07/18/40	8.74	888.26	03/01/41	8.02	888.98	11/08/41	8.54	888.46	06/27/42	5.85	891.15
07/22/40	8.83	888.17	03/09/41	8.05	888.95	11/15/41	8.02	888.98	07/04/42	5.85	891.15
07/24/40	8.87	888.13	03/29/41	8.06	888.94	11/22/41	8.01	888.99	07/12/42	6.23	890.77
07/26/40	8.92	888.08	04/05/41	7.87	889.13	11/29/41	8.03	888.97	07/19/42	6.45	890.55
07/29/40	9.01	887.99	04/12/41	6.69	890.31	12/06/41	8.05	888.95	07/26/42	6.91	890.09
07/31/40	9.06	887.94	04/19/41	5.99	891.01	12/13/41	7.92	889.08	08/09/42	6.97	890.03
08/03/40	8.96	888.04	04/26/41	6.07	890.93	12/20/41	7.93	889.07	08/15/42	6.87	890.13
08/10/40	8.51	888.49	05/03/41	5.99	891.01	12/27/41	7.87	889.13	08/23/42	7.25	889.75
08/17/40	8.61	888.39	05/10/41	6.25	890.75				08/30/42	7.99	889.01
08/24/40	8.66	888.34	05/17/41	6.36	890.64	01/04/42	7.96	889.04	09/06/42	6.34	890.66
08/31/40	8.69	888.31	05/24/41	6.59	890.41	01/10/42	7.95	889.05	09/13/42	6.31	890.69
09/07/40	8.80	888.20	05/31/41	6.66	890.34	01/17/42	8.20	888.80	09/20/42	6.41	890.59
09/14/40	8.89	888.11	06/07/41	5.64	891.36	01/24/42	8.39	888.61	09/27/42	6.39	890.61
09/21/40	8.89	888.11	06/14/41	4.81	892.19	01/30/42	8.43	888.57	10/04/42	6.40	890.60
09/28/40	8.88	888.12	06/21/41	5.84	891.16	02/07/42	8.53	888.47	10/11/42	6.24	890.76
10/05/40	8.93	888.07	06/28/41	6.47	890.53	02/14/42	8.50	888.50	10/17/42	6.30	890.70
10/12/40	8.94	888.06	07/06/41	7.22	889.78	02/21/42	8.54	888.46	10/24/42	6.12	890.88
10/19/40	8.87	888.13	07/12/41	7.47	889.53	02/28/42	8.49	888.51	11/12/42	6.24	890.76
10/26/40	8.83	888.17	07/19/41	8.64	888.36	03/07/42	8.72	888.28	11/21/42	6.30	890.70
11/02/40	8.66	888.34	07/26/41	8.66	888.34	03/14/42	8.74	888.26	11/28/42	6.29	890.71
11/09/40	8.60	888.40	08/02/41	8.26	888.74	03/21/42	8.69	888.31	12/05/42	6.39	890.61
11/16/40	8.35	888.65	08/09/41	8.45	888.55	03/28/42	8.68	888.32	12/11/42	6.50	890.50
11/23/40	8.18	888.82	08/16/41	8.31	888.69	04/04/42	8.12	888.88			
11/30/40	8.00	889.00	08/23/41	8.46	888.54	04/11/42	8.16	888.84	04/24/43	6.60	890.40
12/07/40	7.93	889.07	08/30/41	8.56	888.44	04/18/42	7.76	889.24	05/01/43	7.25	889.75
12/14/40	7.90	889.10	09/06/41	8.76	888.24	04/25/42	7.57	889.43	05/08/43	7.02	889.98
12/21/40	7.87	889.13	09/13/41	8.71	888.29	05/02/42	7.49	889.51	05/15/43	5.80	891.20
12/28/40	7.81	889.19	09/20/41	8.89	888.11	05/09/42	5.56	891.44	05/22/43	5.71	891.29
			09/28/41	8.62	888.38	05/16/42	5.70	891.30	05/29/43	5.52	891.48
01/04/41	7.53	889.47	10/04/41	8.54	888.46	05/23/42	5.61	891.39	06/05/43	3.48	893.52
01/11/41	8.03	888.97	10/11/41	8.37	888.63	05/30/42	5.80	891.20	06/12/43	3.50	893.50
02/01/41	8.47	888.53	10/18/41	8.28	888.72	06/07/42	5.29	891.71	06/21/43	3.55	893.45
02/08/41	8.38	888.62	10/25/41	8.87	888.13	06/14/42	5.54	891.46	06/26/43	4.66	892.34

140-049-36AAA
University Aquifer

MP Elev (msl,ft)=895.18
Sl (ft.)=157-228

Date	Depth to Water (ft)	WL Elev (msl. ft)
08/19/63	54.25	840.93
09/17/63	54.04	841.14
09/24/63	53.64	841.54
11/01/63	53.61	841.57
12/02/63	53.22	841.96
01/14/64	53.15	842.03
03/01/64	52.87	842.31
04/01/64	52.02	843.16
05/04/64	46.14	849.04
05/27/64	33.60	861.58
06/28/64	24.30	870.88
07/30/64	21.83	873.35
08/24/64	20.90	874.28
09/30/64	20.10	875.08
11/02/64	19.94	875.24
12/09/64	16.10	879.08
01/18/65	19.28	875.90
02/12/65	19.01	876.17
03/15/65	19.13	876.05
05/10/65	37.16	858.02
06/11/65	52.31	842.87
08/03/65	53.19	841.99
08/03/66	51.18	844.00
07/11/67	48.24	846.94
07/23/68	52.24	842.94
07/14/69	51.38	843.80
12/03/69	66.48	828.70
12/01/70	69.88	825.30
11/30/71	68.33	826.85
12/07/72	69.31	825.87
12/05/73	72.38	822.80
12/03/74	70.58	824.60
12/04/75	71.04	824.14
11/29/76	72.58	822.60
12/01/77	72.07	823.11
11/20/78	72.60	822.58
11/27/79	72.55	822.63
05/22/80	72.19	822.99
06/21/80	72.36	822.82
07/15/80	72.97	822.21
08/12/80	73.31	821.87
09/09/80	73.43	821.75
10/08/80	73.14	822.04
11/17/80	73.05	822.13
02/23/81	72.79	822.39
04/28/81	72.99	822.19
06/11/81	73.04	822.14
07/22/81	73.20	821.98
09/01/81	73.27	821.91
09/08/81	73.54	821.64
10/07/81	73.27	821.91
12/03/81	73.30	821.88
03/29/82	72.82	822.36
05/20/82	73.47	821.71
06/30/82	73.63	821.55
08/23/82	74.12	821.06
08/24/82	74.50	820.68
10/27/82	75.28	819.90
10/30/82	74.37	820.81
11/17/82	74.97	820.21
11/21/82	74.36	820.82
03/17/83	74.36	820.82
04/18/83	74.52	820.66
05/19/83	74.60	820.58
05/24/83	74.70	820.48
06/02/83	74.71	820.47
06/08/83	74.78	820.40
06/22/83	74.86	820.32
07/28/83	75.79	819.39
08/17/83	75.26	819.92
09/14/83	75.37	819.81
10/11/83	75.38	819.80
11/08/83	75.52	819.66
12/14/83	75.55	819.63
04/10/84	75.56	819.62
05/15/84	75.79	819.39
06/20/84	75.90	819.28
07/11/84	76.12	819.06
08/08/84	77.68	817.50
09/11/84	77.92	817.26
10/03/84	77.18	818.00
10/09/84	77.68	817.50
12/04/84	77.15	818.03
04/09/85	76.94	818.24
05/05/85	77.00	818.18
06/07/85	77.00	818.18
07/08/85	77.44	817.74
08/18/85	77.72	817.46
09/21/85	77.71	817.47
10/25/85	78.01	817.17
12/06/85	77.91	817.27
05/09/86	77.40	817.78
06/06/86	77.68	817.50
07/04/86	77.70	817.48
08/02/86	78.01	817.17
08/31/86	78.22	816.96
10/09/86	78.09	817.09
11/02/86	78.38	816.80
12/07/86	78.35	816.83
04/24/87	78.19	816.99
05/31/87	78.26	816.92
06/27/87	78.57	816.61
07/31/87	78.98	816.20
08/29/87	79.15	816.03
09/26/87	79.23	815.95
10/31/87	79.48	815.70
11/28/87	79.56	815.62
12/19/87	79.48	815.70
04/01/88	79.40	815.78
04/29/88	79.44	815.74
05/28/88	79.59	815.59
06/24/88	80.01	815.17
07/23/88	80.56	814.62
08/20/88	80.57	814.61
09/01/88	80.74	814.44
09/17/88	80.78	814.40
10/14/88	80.78	814.40
11/05/88	80.95	814.23
12/10/88	80.63	814.55
04/22/89	80.07	815.11
05/13/89	80.47	814.71
06/03/89	80.36	814.82
07/01/89	80.93	814.25
07/30/89	81.26	813.92
09/09/89	81.11	814.07
09/30/89	81.10	814.08
10/28/89	81.19	813.99
11/18/89	81.02	814.16
05/05/90	80.38	814.80
05/25/90	80.33	814.85
06/19/90	80.39	814.79
10/18/93	81.29	813.89
11/11/93	81.15	814.03
05/15/94	80.59	814.59
06/11/94	80.98	814.20
07/24/94	81.02	814.16
08/20/94	81.29	813.89
09/24/94	81.30	813.88
11/26/94	81.16	814.02
04/30/95	80.81	814.37
05/28/95	80.77	814.41
07/01/95	81.28	813.90
08/05/95	81.22	813.96
09/09/95	81.18	814.00
10/28/95	81.11	814.07
11/23/95	81.60	813.58
06/04/96	80.86	814.32
06/30/96	81.00	814.18
07/29/96	81.22	813.96
08/25/96	81.59	813.59
10/05/96	81.58	813.60
11/02/96	81.44	813.74

140-050-09ABB
Prosper Aquifer

MP Elev (msl,ft)=896.5
Sl (ft.)=258-263

Date	Depth to Water (ft)	WL Elev (msl. ft)
06/28/83	37.73	858.77
07/28/83	37.73	858.77
08/17/83	37.98	858.52
09/14/83	37.98	858.52
10/11/83	37.86	858.64
11/08/83	37.90	858.60
12/14/83	37.77	858.73
04/10/84	37.85	858.65
05/15/84	37.92	858.58
06/20/84	37.88	858.62
07/11/84	38.13	858.37
08/08/84	38.44	858.06
09/11/84	38.66	857.84
10/09/84	38.66	857.84
10/30/84	38.36	858.14
12/04/84	38.39	858.11
04/09/85	38.39	858.11
05/05/85	38.14	858.36
06/09/85	38.42	858.08
07/08/85	38.57	857.93
08/18/85	38.79	857.71
09/21/85	38.74	857.76
10/25/85	38.71	857.79
12/08/85	38.65	857.85
05/09/86	38.47	858.03
06/07/86	38.67	857.83
07/04/86	38.79	857.71
08/02/86	38.94	857.56
08/31/86	39.19	857.31
10/11/86	38.96	857.54
11/01/86	39.23	857.27
12/06/86	39.10	857.40
04/25/87	39.21	857.29
05/30/87	39.17	857.33
06/27/87	39.29	857.21
08/01/87	39.32	857.18
08/29/87	39.37	857.13
09/26/87	39.37	857.13
10/30/87	39.45	857.05
11/28/87	39.52	856.98
12/19/87	39.28	857.22
04/02/88	39.50	857.00
04/29/88	39.41	857.09
05/28/88	39.50	857.00
06/24/88	39.71	856.79
07/23/88	39.98	856.52
08/20/88	40.00	856.50
09/17/88	40.02	856.48
09/20/88	39.97	856.53
10/14/88	39.93	856.57
11/05/88	39.92	856.58
12/10/88	39.96	856.54
04/22/89	39.69	856.81
05/13/89	40.00	856.50
06/03/89	40.03	856.47
07/01/89	40.15	856.35
07/30/89	40.42	856.08
09/09/89	40.10	856.40
09/30/89	40.18	856.32
10/28/89	40.31	856.19
11/18/89	40.25	856.25
05/05/90	40.20	856.30
05/26/90	40.19	856.31
06/30/90	40.22	856.28
08/04/90	40.60	855.90
09/01/90	40.67	855.83
09/29/90	40.68	855.82
10/27/90	40.64	855.86
11/17/90	40.64	855.86
12/08/90	40.60	855.90
03/30/91	40.49	856.01
05/11/91	40.43	856.07
06/01/91	40.41	856.09
07/13/91	40.58	855.92
08/10/91	40.76	855.74
08/31/91	40.96	855.54
09/28/91	40.86	855.64
10/19/91	40.93	855.57
11/16/91	40.84	855.66
12/20/91	40.86	855.64
04/17/92	40.80	855.70
05/20/92	40.88	855.62
06/13/92	40.91	855.59
07/26/92	40.84	855.66
08/27/92	40.99	855.51
09/24/92	40.85	855.65
10/17/92	41.02	855.48
11/11/92	40.90	855.60
12/05/92	40.90	855.60
05/01/93	40.96	855.54
06/05/93	40.95	855.55
08/05/93	40.75	855.75
08/28/93	40.95	855.55
09/25/93	41.01	855.49
10/17/93	41.05	855.45
11/11/93	41.10	855.40
04/16/94	41.06	855.44
05/15/94	41.10	855.40
06/11/94	41.24	855.26
07/23/94	41.17	855.33
07/27/94	41.29	855.21
08/20/94	41.32	855.18
09/24/94	41.24	855.26
10/28/94	41.00	855.50
11/26/94	41.17	855.33
04/29/95	41.25	855.25
05/28/95	41.24	855.26
07/01/95	41.50	855.00
08/05/95	41.42	855.08
09/09/95	41.45	855.05
10/27/95	41.19	855.31
11/21/95	41.37	855.13
06/04/96	41.43	855.07
06/30/96	41.55	854.95
07/28/96	41.75	854.75
08/24/96	41.87	854.63
10/05/96	41.74	854.76
11/02/96	41.66	854.84

140-050-13CCC MP Elev (msl,ft)=899.79

94/10 Channel Aquifer Sl (ft.)=164-169

Date	Depth to Water (ft)	WL Elev (msl, ft)	Date	Depth to Water (ft)	WL Elev (msl, ft)	Date	Depth to Water (ft)	WL Elev (msl, ft)	Date	Depth to Water (ft)	WL Elev (msl, ft)
06/28/83	57.26	842.53	09/21/85	58.49	841.30						
07/28/83	57.32	842.47	10/25/85	58.48	841.31	04/29/88	59.32	840.47	03/30/91	60.45	839.34
08/17/83	57.43	842.36	12/08/85	58.57	841.22	05/28/88	59.27	840.52	05/11/91	60.42	839.37
09/14/83	57.52	842.27				06/24/88	59.47	840.32	06/01/91	60.50	839.29
10/11/83	57.46	842.33	05/09/86	58.21	841.58	07/23/88	59.74	840.05	07/13/91	60.52	839.27
11/08/83	57.49	842.30	06/07/86	58.50	841.29	08/20/88	59.74	840.05	08/10/91	60.67	839.12
12/14/83	57.38	842.41	07/04/86	58.57	841.22	08/25/88	59.74	840.05	08/31/91	60.77	839.02
			08/02/86	58.74	841.05	09/17/88	59.82	839.97	09/28/91	60.82	838.97
04/10/84	57.51	842.28	08/31/86	58.83	840.96	10/14/88	59.78	840.01	10/19/91	60.80	838.99
05/15/84	57.62	842.17	10/11/86	58.82	840.97	11/05/88	59.72	840.07	11/16/91	60.87	838.92
06/20/84	57.54	842.25	11/01/86	58.92	840.87	12/10/88	59.82	839.97	12/20/91	60.80	838.99
07/11/84	57.71	842.08	12/06/86	58.83	840.96						
08/08/84	57.98	841.81				04/26/90	60.22	839.57	04/17/92	60.93	838.86
09/11/84	58.18	841.61	04/25/87	58.89	840.90	05/05/90	52.86	846.93	05/20/92	60.86	838.93
10/09/84	58.24	841.55	05/30/87	58.72	841.07	05/26/90	53.79	846.00	06/13/92	60.96	838.83
10/30/84	58.01	841.78	06/27/87	59.00	840.79	06/30/90	55.33	844.46	07/26/92	60.87	838.92
12/04/84	58.10	841.69	08/01/87	59.02	840.77	08/04/90	56.38	843.41	08/27/92	61.04	838.75
			08/29/87	59.12	840.67	09/01/90	57.23	842.56	09/24/92	60.96	838.83
04/09/85	58.20	841.59	09/26/87	59.15	840.64	09/29/90	58.02	841.77	10/17/92	61.10	838.69
06/09/85	58.14	841.65	10/30/87	59.28	840.51	10/27/90	59.14	840.65	11/11/92	61.03	838.76
07/08/85	58.33	841.46	11/28/87	59.30	840.49	11/17/90	60.28	839.51	12/05/92	61.03	838.76
08/18/85	58.37	841.42	12/19/87	59.12	840.67	12/08/90	60.61	839.18			

140-050-15BBB MP Elev (msl,ft)=895.11

Prosper Aquifer Sl (ft.)=251-256

Date	Depth to Water (ft)	WL Elev (msl, ft)	Date	Depth to Water (ft)	WL Elev (msl, ft)	Date	Depth to Water (ft)	WL Elev (msl, ft)	Date	Depth to Water (ft)	WL Elev (msl, ft)
11/16/91	40.56	854.55	12/05/92	40.57	854.54	05/15/94	40.32	854.79	08/05/95	42.24	852.67
12/20/91	40.57	854.54				06/11/94	40.46	854.65	09/09/95	42.35	852.76
			05/01/93	40.65	854.46	07/23/94	40.38	854.73	10/27/95	42.40	852.71
04/17/92	40.32	854.79	06/05/93	40.62	854.49	08/20/94	40.54	854.57	11/21/95	42.58	852.53
05/20/92	40.54	854.57	08/05/93	40.03	855.08	09/24/94	40.46	854.65			
06/13/92	40.69	854.42	08/28/93	40.23	854.88	10/29/94	41.77	853.34	06/04/96	42.65	852.46
07/26/92	40.52	854.59	09/25/93	40.28	854.83	11/26/94	41.86	853.25	06/30/96	42.77	852.34
08/27/92	40.65	854.46	10/17/93	40.33	854.78				07/28/96	43.02	852.09
09/24/92	40.53	854.58	11/11/93	40.35	854.76	04/29/95	42.02	853.09	08/24/96	43.10	852.01
10/17/92	40.70	854.41				05/28/95	42.04	853.07	10/05/96	42.94	852.17
11/11/92	40.57	854.54	04/16/94	40.35	854.76	07/01/95	42.30	852.81	11/02/96	42.86	852.25

140-050-15DDDC1 MP Elev (msl,ft)=897.7

Prosper Aquifer Sl (ft.)=298-303

Date	Depth to Water (ft)	WL Elev (msl, ft)	Date	Depth to Water (ft)	WL Elev (msl, ft)	Date	Depth to Water (ft)	WL Elev (msl, ft)	Date	Depth to Water (ft)	WL Elev (msl, ft)
07/28/83	45.55	852.15	12/06/86	47.30	850.40	11/18/89	48.91	848.79			
08/14/83	45.77	851.93							05/01/93	49.72	847.98
08/17/83	45.73	851.97	04/25/87	47.37	850.33	05/05/90	48.85	848.85	06/05/93	49.67	848.03
10/11/83	45.70	852.00	05/30/87	47.29	850.41	05/26/90	48.84	848.86	08/05/93	49.65	848.05
11/08/83	45.76	851.94	06/27/87	47.55	850.15	06/30/90	48.82	848.88	08/28/93	49.69	848.01
12/14/83	45.62	852.08	08/01/87	47.62	850.08	08/04/90	49.25	848.45	09/25/93	49.71	847.99
			08/29/87	47.62	850.08	09/01/90	49.32	848.38	10/17/93	49.78	847.92
04/10/84	45.86	851.84	09/26/87	47.75	849.95	09/29/90	49.34	848.36	11/11/93	49.79	847.91
05/15/84	45.91	851.79	10/30/87	47.91	849.79	10/27/90	49.28	848.42			
06/20/84	45.91	851.79	11/28/87	47.92	849.78	11/17/90	49.30	848.40	04/16/94	49.85	847.85
07/11/84	46.14	851.56	12/19/87	47.53	850.17	12/08/90	49.27	848.43	05/15/94	49.87	847.83
08/08/84	46.52	851.18							06/11/94	49.92	847.78
09/11/84	46.77	850.93	04/02/88	47.70	850.00	03/30/91	49.13	848.57	07/23/94	50.01	847.69
10/09/84	46.82	850.88	04/29/88	47.78	849.92	05/11/91	49.09	848.61	07/27/94	49.99	847.71
10/30/84	46.50	851.20	05/28/88	47.88	849.82	06/01/91	49.12	848.58	08/20/94	50.05	847.65
12/04/84	46.60	851.10	06/24/88	48.10	849.60	07/13/91	49.25	848.45	09/24/94	50.01	847.69
			07/23/88	48.44	849.26	08/10/91	49.52	848.18	10/28/94	51.80	845.90
04/09/85	46.63	851.07	08/20/88	48.43	849.27	08/31/91	49.50	848.20	11/26/94	51.96	845.74
05/05/85	46.63	851.07	08/25/88	48.51	849.19	09/28/91	49.50	848.20			
06/09/85	46.63	851.07	09/17/88	48.54	849.16	10/19/91	49.58	848.12	04/29/95	52.10	845.60
07/08/85	46.83	850.87	10/14/88	48.07	849.63	11/16/91	49.55	848.15	05/28/95	52.06	845.64
08/18/85	47.03	850.67	11/05/88	48.34	849.36	12/20/91	49.53	848.17	07/01/95	52.31	845.39
09/21/85	47.01	850.69	12/10/88	48.53	849.17				08/05/95	52.25	845.45
10/25/85	47.03	850.67				04/17/92	49.52	848.18	09/09/95	52.40	845.30
			04/22/89	48.40	849.30	05/20/92	49.55	848.15	10/27/95	52.11	845.59
05/09/86	46.74	850.96	05/13/89	48.49	849.21	06/13/92	49.69	848.01	11/21/95	52.30	845.40
06/07/86	46.98	850.72	06/03/89	48.54	849.16	07/26/92	49.59	848.11			
07/04/86	47.10	850.60	07/01/89	48.73	848.97	08/27/92	49.69	848.01	06/04/96	52.33	845.37
08/02/86	47.23	850.47	07/30/89	49.10	848.60	09/24/92	49.57	848.13	06/30/96	52.45	845.25
08/31/86	47.34	850.36	09/09/89	48.85	848.85	10/17/92	49.77	847.93	07/28/96	52.65	845.05
10/11/86	47.30	850.40	09/30/89	48.83	848.87	11/11/92	49.64	848.06	08/24/96	52.72	844.98
11/01/86	47.40	850.30	10/28/89	48.97	848.73	12/05/92	49.65	848.05	10/05/96	52.72	844.98

140-050-15DDDC2 MP Elev (msl,ft)=897.7

Prosper Aquifer SI (ft.)=189-194

Date	Depth to Water (ft)	WL Elev (msl, ft)	Date	Depth to Water (ft)	WL Elev (msl, ft)	Date	Depth to Water (ft)	WL Elev (msl, ft)	Date	Depth to Water (ft)	WL Elev (msl, ft)
06/28/83	45.34	852.36	11/01/86	47.28	850.42	11/18/89	48.79	848.91	05/01/93	49.60	848.10
07/28/83	45.47	852.23	12/06/86	47.19	850.51				06/05/93	49.55	848.15
08/17/83	45.80	851.90				05/05/90	48.71	848.99	08/05/93	49.52	848.18
09/14/83	45.68	852.02	04/25/87	47.25	850.45	05/26/90	48.68	849.02	08/28/93	49.58	848.12
10/11/83	45.40	852.30	05/30/87	47.00	850.70	06/30/90	48.70	849.00	09/25/93	49.60	848.10
11/08/83	45.65	852.05	06/27/87	47.45	850.25	08/04/90	49.15	848.55	10/17/93	49.65	848.05
12/14/83	45.52	852.18	08/01/87	47.52	850.18	09/01/90	49.21	848.49	11/11/93	49.69	848.01
			08/29/87	47.60	850.10	09/29/90	49.19	848.51			
04/10/84	45.75	851.95	09/26/87	47.51	850.19	10/27/90	49.17	848.53	04/16/94	49.74	847.96
05/15/84	45.80	851.90	10/30/87	47.80	849.90	11/17/90	49.18	848.52	05/15/94	49.72	847.98
06/20/84	45.80	851.90	11/28/87	47.79	849.91	12/08/90	49.16	848.54	06/11/94	49.82	847.88
07/11/84	46.05	851.65	12/19/87	47.56	850.14				07/23/94	49.80	847.90
08/08/84	46.39	851.31				03/30/91	49.02	848.68	07/27/94	49.84	847.86
09/11/84	46.66	851.04	04/02/88	47.60	850.10	05/11/91	48.98	848.72	08/20/94	49.90	847.80
10/09/84	46.69	851.01	04/29/88	47.68	850.02	06/01/91	49.00	848.70	09/24/94	49.90	847.80
10/30/84	46.41	851.29	05/28/88	47.76	849.94	07/13/91	49.07	848.63	10/28/94	51.27	846.43
12/04/84	46.49	851.21	06/24/88	48.00	849.70	08/10/91	49.28	848.42	11/26/94	51.41	846.29
			07/23/88	48.20	849.50	08/31/91	49.40	848.30			
04/09/85	46.49	851.21	08/20/88	48.33	849.37	09/28/91	49.41	848.29	04/29/95	51.57	846.13
05/05/85	46.50	851.20	08/25/88	48.64	849.06	10/19/91	49.47	848.23	05/28/95	51.54	846.16
06/09/85	46.50	851.20	09/17/88	48.43	849.27	11/16/91	49.43	848.27	07/01/95	51.77	845.93
07/08/85	46.71	850.99	10/14/88	48.28	849.42	12/20/91	49.42	848.28	08/05/95	51.00	846.70
08/18/85	46.93	850.77	11/05/88	48.29	849.41				09/09/95	51.86	845.84
09/21/85	46.90	850.80	12/10/88	48.39	849.31	04/17/92	49.40	848.30	10/27/95	51.58	846.12
10/25/85	46.91	850.79				05/20/92	49.44	848.26	11/21/95	51.77	845.93
12/08/85	46.93	850.77	04/22/89	48.19	849.51	06/13/92	49.58	848.12			
			05/13/89	48.38	849.32	07/26/92	49.48	848.22	06/04/96	51.98	845.72
05/09/86	46.70	851.00	06/03/89	48.42	849.28	08/27/92	49.59	848.11	06/30/96	51.99	845.71
06/07/86	46.83	850.87	07/01/89	48.64	849.06	09/24/92	49.46	848.24	07/28/96	52.10	845.60
07/04/86	46.90	850.80	07/30/89	48.99	848.71	10/17/92	49.64	848.06	08/24/96	52.17	845.53
08/02/86	46.98	850.72	09/09/89	48.77	848.93	11/11/92	49.51	848.19	10/05/96	52.00	845.70
08/31/86	47.18	850.52	09/30/89	48.72	848.98	12/05/92	49.57	848.13	11/02/96	51.98	845.72
10/11/86	47.13	850.57	10/28/89	48.86	848.84						

140-050-26CCC MP Elev (msl,ft)=899.9

Prosper Aquifer SI (ft.)=218-223

Date	Depth to Water (ft)	WL Elev (msl, ft)	Date	Depth to Water (ft)	WL Elev (msl, ft)	Date	Depth to Water (ft)	WL Elev (msl, ft)	Date	Depth to Water (ft)	WL Elev (msl, ft)
06/28/83	49.09	850.81	12/09/86	50.97	848.93	11/19/89	52.69	847.21			
07/28/83	49.22	850.68							05/01/93	53.57	846.33
08/18/83	49.37	850.53	04/24/87	51.20	848.70	01/04/90	52.86	847.04	06/05/93	53.53	846.37
09/14/83	49.37	850.53	05/30/87	51.17	848.73	05/04/90	52.66	847.24	08/05/93	53.50	846.40
10/12/83	49.37	850.53	06/27/87	51.49	848.41	05/25/90	52.69	847.21	08/28/93	53.56	846.34
11/08/83	49.42	850.48	07/15/87	51.28	848.62	06/30/90	52.64	847.26	09/25/93	53.59	846.31
12/14/83	49.28	850.62	07/31/87	51.58	848.32	08/04/90	53.11	846.79	10/17/93	53.64	846.26
			08/29/87	51.54	848.36	09/02/90	53.16	846.74	11/11/93	53.64	846.26
04/11/84	49.52	850.38	09/25/87	51.67	848.23	09/29/90	53.18	846.72			
05/16/84	49.57	850.33	10/31/87	51.80	848.10	10/09/90	53.18	846.72	04/16/94	53.72	846.18
06/21/84	49.64	850.26	11/28/87	51.83	848.07	10/27/90	53.11	846.79	05/15/94	53.70	846.20
07/11/84	49.86	850.04	12/19/87	51.60	848.30	11/18/90	53.07	846.83	06/11/94	53.80	846.10
08/08/84	50.22	849.68				12/08/90	53.11	846.79	07/24/94	53.82	846.08
09/12/84	50.39	849.51	04/02/88	51.53	848.37				07/27/94	53.86	846.04
10/09/84	50.52	849.38	04/29/88	51.58	848.32	03/30/91	53.00	846.90	08/20/94	53.95	845.95
10/31/84	50.21	849.69	05/27/88	51.63	848.27	05/11/91	52.92	846.98	09/24/94	53.91	845.99
12/05/84	50.36	849.54	06/25/88	51.98	847.92	06/01/91	52.96	846.94	10/28/94	53.69	846.21
			07/12/88	51.97	847.93	07/13/91	53.09	846.81	11/26/94	53.95	845.95
04/10/85	50.36	849.54	07/23/88	52.22	847.68	08/10/91	53.27	846.63			
05/05/85	50.31	849.59	08/20/88	52.22	847.68	08/31/91	53.26	846.64	04/29/95	53.80	846.10
06/07/85	50.30	849.60	09/17/88	52.33	847.57	09/29/91	53.36	846.54	05/28/95	53.96	845.94
07/08/85	50.57	849.33	09/20/88	52.22	847.68	10/19/91	53.44	846.46	07/01/95	54.14	845.76
08/18/85	50.77	849.13	10/14/88	52.23	847.67	11/16/91	53.40	846.50	08/05/95	54.16	845.74
09/22/85	50.78	849.12	11/05/88	52.22	847.68	12/21/91	53.36	846.54	09/09/95	54.24	845.66
10/25/85	50.77	849.13	12/11/88	52.33	847.57				10/27/95	54.01	845.89
						04/17/92	53.39	846.51	11/21/95	54.17	845.73
06/06/86	50.85	849.05	04/21/89	52.22	847.68	05/20/92	53.39	846.51			
07/04/86	50.94	848.96	05/13/89	52.31	847.59	06/13/92	53.54	846.36	06/04/96	54.23	845.67
07/16/86	50.75	849.15	06/03/89	52.32	847.58	07/26/92	53.46	846.44	06/30/96	54.29	845.61
08/03/86	50.89	849.01	07/01/89	52.54	847.36	08/27/92	53.55	846.35	07/28/96	54.45	845.45
08/30/86	51.20	848.70	07/30/89	52.91	846.99	09/24/92	53.45	846.45	08/24/96	54.62	845.28
10/11/86	51.13	848.77	09/10/89	52.74	847.16	10/17/92	53.62	846.28	10/05/96	54.45	845.45
11/01/86	51.26	848.64	10/01/89	52.66	847.24	11/11/92	53.47	846.43	11/02/96	54.40	845.50
12/06/86	51.20	848.70	10/28/89	52.79	847.11	12/05/92	53.49	846.41			

140-050-27CCC
Undefined Aquifer

MP Elev (msl,ft)=897.9
Sl (ft.)=152-157

Date	Depth to Water (ft)	WL Elev (msl, ft)
06/28/83	31.26	866.64
07/28/83	31.24	866.66
08/18/83	31.38	866.52
09/14/83	31.51	866.39
10/12/83	31.48	866.42
11/08/83	31.50	866.40
04/11/84	31.41	866.49
05/16/84	31.42	866.48
06/21/84	31.41	866.49
07/11/84	31.58	866.32
08/08/84	31.92	865.98
09/12/84	32.14	865.76
10/09/84	32.52	865.38
10/31/84	31.86	866.04
12/05/84	31.92	865.98
04/10/85	31.93	865.97
05/05/85	32.00	865.90
06/07/85	31.93	865.97
07/08/85	32.20	865.70
08/18/85	32.47	865.43
09/22/85	32.47	865.43
10/25/85	32.45	865.45
06/06/86	32.35	865.55
08/03/86	32.58	865.32
08/30/86	32.72	865.18
10/11/86	32.67	865.23
11/01/86	32.76	865.14
12/06/86	32.53	865.37
04/24/87	32.81	865.09
05/30/87	32.74	865.16
06/27/87	33.00	864.90
07/31/87	33.12	864.78
08/29/87	33.13	864.77
09/25/87	33.18	864.72
10/31/87	33.46	864.44
11/28/87	33.32	864.58
12/19/87	33.20	864.70
04/02/88	33.19	864.71
04/29/88	33.20	864.70
05/27/88	33.27	864.63
06/25/88	33.53	864.37
07/23/88	33.69	864.21
08/20/88	33.70	864.20
09/14/88	33.82	864.08
09/17/88	33.77	864.13
10/14/88	33.67	864.23
11/05/88	33.57	864.33
12/11/88	33.83	864.07
04/21/89	33.63	864.27
05/13/89	33.75	864.15
06/03/89	33.73	864.17
07/01/89	33.95	863.95
07/30/89	34.22	863.68
09/10/89	34.16	863.74
10/01/89	34.10	863.80
10/28/89	34.20	863.70
11/19/89	34.14	863.76
05/04/90	34.10	863.80
05/25/90	34.10	863.80
06/30/90	34.07	863.83
08/04/90	34.52	863.38
09/02/90	34.63	863.27
09/29/90	34.68	863.22
10/27/90	34.82	863.08
11/18/90	34.77	863.13
12/08/90	34.77	863.13
03/30/91	34.57	863.33
05/11/91	34.44	863.46
06/01/91	34.42	863.48
07/13/91	34.50	863.40
08/10/91	34.69	863.21
08/31/91	34.79	863.11
09/29/91	34.77	863.13
10/19/91	34.83	863.07
11/16/91	34.76	863.14
12/21/91	34.70	863.20
04/17/92	34.70	863.20
05/20/92	34.62	863.28
06/13/92	34.87	863.03
07/26/92	34.75	863.15
08/27/92	34.81	863.09
09/24/92	34.72	863.18
10/17/92	34.85	863.05
11/11/92	34.63	863.27
12/05/92	34.69	863.21
05/01/93	34.72	863.18
06/05/93	34.66	863.24
08/28/93	34.09	863.81
09/25/93	34.33	863.57
10/17/93	34.46	863.44
11/11/93	34.53	863.37
04/16/94	34.58	863.32
05/15/94	34.57	863.33
06/11/94	34.82	863.08
07/24/94	34.79	863.11
07/27/94	34.88	863.02
08/20/94	34.85	863.05
09/24/94	34.85	863.05
10/28/94	34.72	863.18
11/26/94	34.84	863.06
04/29/95	34.99	862.91
05/28/95	35.00	862.90
07/01/95	35.22	862.68
08/05/95	35.20	862.70
09/09/95	35.33	862.57
10/27/95	35.15	862.75
11/21/95	35.23	862.67
06/04/96	35.28	862.62
06/30/96	35.42	862.48
07/28/96	35.71	862.19
08/24/96	35.81	862.09
10/05/96	35.70	862.20
11/02/96	35.64	862.26

140-050-35ABB
Prosper Aquifer

MP Elev (msl,ft)=900.39
Sl (ft.)=198-203

Date	Depth to Water (ft)	WL Elev (msl, ft)
06/28/83	48.86	851.53
07/28/83	48.99	851.40
08/18/83	49.12	851.27
09/14/83	49.15	851.24
10/12/83	49.10	851.29
11/08/83	49.17	851.22
12/14/83	49.03	851.36
04/11/84	49.26	851.13
05/16/84	49.34	851.05
06/21/84	49.35	851.04
07/11/84	49.59	850.80
08/08/84	49.96	850.43
09/12/84	50.15	850.24
10/09/84	50.29	850.10
10/31/84	49.95	850.44
12/05/84	50.10	850.29
04/10/85	50.12	850.27
05/05/85	50.08	850.31
06/07/85	50.05	850.34
07/08/85	50.32	850.07
08/18/85	50.58	849.81
09/22/85	50.51	849.88
10/25/85	50.50	849.89
12/08/85	50.57	849.82
05/10/86	50.45	849.94
06/06/86	50.47	849.92
07/04/86	50.66	849.73
07/16/86	50.49	849.90
08/03/86	50.85	849.54
08/30/86	50.89	849.50
10/11/86	50.85	849.54
11/01/86	50.90	849.49
12/06/86	50.87	849.52
12/09/86	50.71	849.68
04/24/87	50.84	849.55
05/30/87	50.80	849.59
06/27/87	51.02	849.37
07/16/87	51.01	849.38
07/31/87	51.13	849.26
08/29/87	51.26	849.13
09/25/87	51.27	849.12
10/31/87	51.43	848.96
11/28/87	51.42	848.97
12/19/87	51.20	849.19
04/02/88	51.26	849.13
04/29/88	51.31	849.08
05/27/88	51.39	849.00
06/25/88	51.75	848.64
07/12/88	51.77	848.62
07/23/88	51.95	848.44
08/20/88	51.98	848.41
08/25/88	52.00	848.39
09/17/88	52.09	848.30
10/14/88	51.96	848.43
11/05/88	51.94	848.45
12/11/88	51.99	848.40
04/21/89	51.91	848.48
05/13/89	51.99	848.40
06/03/89	51.97	848.42
07/01/89	52.26	848.13
07/30/89	52.65	847.74
09/10/89	52.47	847.92
10/01/89	52.36	848.03
10/28/89	52.52	847.87
11/19/89	52.41	847.98
01/04/90	52.56	847.83
09/25/90	52.79	847.60
10/09/90	52.85	847.54
10/16/90	52.81	847.58
10/27/90	53.34	847.05
11/18/90	53.30	847.09
12/08/90	53.32	847.07
03/30/91	53.20	847.19
05/11/91	53.15	847.24
06/01/91	53.18	847.21
07/13/91	53.29	847.10
08/10/91	53.49	846.90
08/31/91	53.55	846.84
09/29/91	53.57	846.82
10/19/91	53.63	846.76
11/16/91	53.58	846.81
12/21/91	53.56	846.83
04/17/92	53.60	846.79
05/20/92	53.60	846.79
06/13/92	53.75	846.64
07/26/92	53.68	846.71
08/27/92	53.77	846.62
09/24/92	53.65	846.74
10/17/92	53.83	846.56
11/11/92	53.69	846.70
12/05/92	53.70	846.69
05/01/93	53.78	846.61
06/05/93	53.74	846.65
08/05/93	53.74	846.65
08/28/93	53.77	846.62
09/25/93	53.78	846.61
10/17/93	53.87	846.52
11/11/93	53.87	846.52
04/16/94	53.94	846.45
05/15/94	53.94	846.45
06/11/94	54.02	846.37
07/24/94	54.02	846.37
07/27/94	54.06	846.33
08/20/94	54.14	846.25
09/24/94	54.12	846.27
10/28/94	53.89	846.50
11/26/94	54.07	846.32
04/29/95	54.06	846.33
05/28/95	54.17	846.22
07/01/95	54.42	845.97
08/05/95	54.35	846.04
09/09/95	54.50	845.89
10/27/95	54.21	846.18
11/21/95	54.36	846.03
06/04/96	54.40	845.99
06/30/96	54.51	845.88
07/28/96	54.74	845.65
08/24/96	54.80	845.59
10/05/96	54.64	845.75

140-050-36BAA MP Elev (msl,ft)=894.47

94/10 Channel Aquifer SI (ft.)=138-143

Date	Depth to Water (ft)	WL Elev (msl, ft)
06/28/83	54.69	839.78
07/28/83	54.77	839.70
08/18/83	54.95	839.52
09/14/83	55.03	839.44
10/12/83	54.99	839.48
11/08/83	54.93	839.54
12/14/83	54.90	839.57
04/11/84	55.02	839.45
05/16/84	55.33	839.14
06/21/84	55.19	839.28
07/11/84	55.32	839.15
08/06/84	55.58	838.89
09/12/84	55.74	838.73
10/09/84	56.04	838.43
10/31/84	55.82	838.65
12/05/84	55.97	838.50
04/10/85	56.02	838.45
05/05/85	55.98	838.49
06/07/85	55.94	838.53
07/08/85	56.14	838.33
08/18/85	56.32	838.15
09/22/85	56.26	838.21
10/25/85	56.23	838.24
12/08/85	56.41	838.06
05/10/86	55.97	838.50
06/06/86	56.49	837.98
07/04/86	56.47	838.00
07/16/86	56.41	838.06
08/03/86	56.71	837.76
08/30/86	56.80	837.67
10/11/86	56.77	837.70
11/01/86	56.89	837.58
12/06/86	56.79	837.68
12/09/86	56.58	837.89
04/24/87	56.85	837.62
05/30/87	56.62	837.85
06/27/87	56.93	837.54
07/16/87	56.79	837.68
07/31/87	57.01	837.46
08/29/87	57.11	837.36
09/25/87	57.22	837.25
10/31/87	57.25	837.22
11/28/87	57.38	837.09
12/19/87	57.08	837.39
04/02/88	57.17	837.30
04/29/88	57.14	837.33
05/27/88	57.06	837.41
06/25/88	57.31	837.16
07/12/88	57.46	837.01
07/23/88	57.69	836.78
08/20/88	57.69	836.78
08/25/88	57.72	836.75
09/17/88	57.79	836.68
10/14/88	57.88	836.59
11/05/88	57.75	836.72
12/11/88	58.14	836.33
04/21/89	57.90	836.57
05/13/89	58.01	836.46
06/03/89	57.94	836.53
07/01/89	57.99	836.48
07/30/89	58.47	836.00
09/10/89	58.38	836.09
10/01/89	58.16	836.31
10/28/89	58.47	836.00
11/19/89	58.41	836.06
01/04/90	58.49	835.98
05/04/90	58.48	835.99
05/25/90	58.48	835.99
06/30/90	58.41	836.06
08/04/90	58.86	835.61
09/02/90	58.88	835.59
09/29/90	58.96	835.51
10/09/90	58.97	835.50
10/27/90	58.85	835.62
11/18/90	58.80	835.67
12/08/90	58.83	835.64
03/30/91	58.72	835.75
05/11/91	58.78	835.69
06/01/91	58.74	835.73
07/13/91	58.86	835.61
08/10/91	59.08	835.39
08/31/91	59.08	835.39
09/29/91	59.10	835.37
10/19/91	59.14	835.33
11/16/91	59.18	835.29
12/21/91	59.19	835.28
04/17/92	59.19	835.28
05/20/92	59.17	835.30
06/13/92	59.30	835.17
07/26/92	59.33	835.14
08/27/92	59.43	835.04
09/24/92	59.27	835.20
10/17/92	59.55	834.92
11/11/92	59.32	835.15
12/05/92	59.39	835.08
05/01/93	59.75	834.72
06/05/93	59.73	834.74
08/28/93	59.64	834.83
09/25/93	59.78	834.69
10/17/93	59.79	834.68
04/16/94	59.45	835.02
05/15/94	59.48	834.99
06/11/94	59.60	834.87
07/24/94	59.52	834.95
07/27/94	59.60	834.87
08/20/94	59.43	835.04
09/24/94	59.38	835.09
10/28/94	62.94	831.53
11/26/94	63.21	831.26
04/29/95	63.45	831.02
05/28/95	63.41	831.06
07/01/95	63.56	830.91
08/05/95	63.56	830.91
09/09/95	63.79	830.68
10/27/95	63.31	831.16
11/21/95	63.69	830.78
06/04/96	63.69	830.78
06/30/96	63.74	830.73
07/28/96	64.00	830.47
08/24/96	64.00	830.47
10/05/96	64.00	830.47
11/02/96	64.00	830.47

140-050-36BBB MP Elev (msl,ft)=895.63

Prosper Aquifer SI (ft.)=186-191

Date	Depth to Water (ft)	WL Elev (msl, ft)
09/08/81	47.55	848.08
05/20/82	47.12	848.51
08/24/82	47.65	847.98
11/17/82	47.68	847.95
05/24/83	47.50	848.13
06/02/83	47.44	848.19
06/08/83	47.44	848.19
06/22/83	47.47	848.16
06/28/83	47.43	848.20
07/28/83	47.95	847.68
08/18/83	47.68	847.95
09/14/83	47.76	847.87
10/12/83	47.80	847.83
11/08/83	47.84	847.79
04/11/84	47.91	847.72
05/16/84	47.99	847.64
06/21/84	48.02	847.61
07/11/84	48.24	847.39
08/08/84	48.60	847.03
09/12/84	48.74	846.89
10/09/84	48.91	846.72
10/31/84	48.69	846.94
12/05/84	48.83	846.80
04/10/85	48.84	846.79
05/05/85	48.86	846.77
06/07/85	48.80	846.83
07/08/85	49.06	846.57
08/18/85	49.20	846.43
09/22/85	49.25	846.38
10/25/85	49.24	846.39
12/08/85	49.39	846.24
05/10/86	49.28	846.35
06/06/86	49.23	846.40
07/04/86	49.60	846.03
07/16/86	49.22	846.41
08/03/86	49.68	845.95
08/30/86	49.72	845.91
10/11/86	49.72	845.91
11/01/86	49.83	845.80
12/06/86	49.78	845.85
12/09/86	49.47	846.16
04/24/87	49.72	845.91
05/30/87	49.70	845.93
06/27/87	49.98	845.65
07/15/87	49.71	845.92
07/31/87	50.04	845.59
08/29/87	50.24	845.39
09/25/87	50.32	845.31
10/31/87	50.46	845.17
11/28/87	50.47	845.16
12/19/87	50.24	845.39
04/02/88	50.14	845.49
04/29/88	50.12	845.51
05/27/88	50.26	845.37
06/25/88	50.58	845.05
07/12/88	50.62	845.01
07/23/88	50.82	844.81
08/20/88	50.81	844.82
09/17/88	50.93	844.70
10/14/88	50.88	844.75
11/05/88	50.82	844.81
12/11/88	51.34	844.29
04/21/89	50.87	844.76
05/13/89	51.02	844.61
06/03/89	51.10	844.53
07/01/89	51.30	844.33
07/30/89	51.67	843.96
09/10/89	51.40	844.23
10/01/89	51.35	844.28
10/28/89	51.64	843.99
11/19/89	51.54	844.09
01/04/90	49.65	845.98
05/04/90	51.40	844.23
05/25/90	51.57	844.06
06/30/90	51.51	844.12
08/04/90	51.98	843.65
09/02/90	51.97	843.66
09/29/90	51.97	843.66
10/09/90	51.73	843.90
10/27/90	51.92	843.71
11/18/90	51.86	843.77
12/08/90	51.92	843.71
03/30/91	51.83	843.80
05/11/91	51.79	843.84
06/01/91	51.82	843.81
07/13/91	51.94	843.69
08/10/91	52.12	843.51
08/31/91	52.30	843.33
09/26/91	52.08	843.55
09/29/91	52.31	843.32
10/20/91	52.34	843.29
11/16/91	52.36	843.27
12/21/91	52.38	843.25
04/18/92	52.32	843.31
05/20/92	52.40	843.23
06/13/92	52.56	843.07
07/26/92	52.48	843.15
08/27/92	52.55	843.08
09/24/92	52.43	843.20
10/17/92	52.68	842.95
11/11/92	52.48	843.15
12/05/92	52.52	843.11
05/01/93	52.26	843.37
06/05/93	52.26	843.37
08/28/93	51.39	844.24
09/25/93	51.77	843.86
10/17/93	52.79	842.84
11/11/93	52.25	843.38
04/16/94	52.92	842.71
05/15/94	52.90	842.73
06/11/94	52.98	842.65
07/24/94	53.02	842.61
07/27/94	53.03	842.60
08/20/94	53.16	842.47
09/24/94	53.11	842.52
10/28/94	53.87	841.76
11/26/94	54.09	841.54
04/29/95	54.18	841.45
05/28/95	54.18	841.45
07/01/95	54.40	841.23
08/05/95	54.36	841.27
09/09/95	54.52	841.11
10/27/95	54.18	841.45
11/21/95	54.40	841.23
06/04/96	54.39	841.24
06/30/96	54.49	841.14
07/28/96	54.71	840.92
08/24/96	54.78	840.85
10/05/96	54.64	840.99

141-049-03CCC
West Fargo North Aquifer

MP Elev (msl,ft)=881.4
SI (ft.)=166-169

Date	Depth to Water (ft)	WL Elev (msl, ft)
09/08/81	55.63	825.77
08/24/82	56.13	825.27
11/17/82	55.66	825.74
04/10/84	56.46	824.94
05/15/84	56.54	824.86
06/20/84	56.57	824.83
07/11/84	56.79	824.61
08/08/84	57.18	824.22
09/11/84	57.51	823.89
10/09/84	57.48	823.92
10/30/84	57.13	824.27
12/04/84	57.12	824.28
04/09/85	56.52	824.88
06/09/85	56.97	824.43
07/08/85	57.17	824.23
08/18/85	57.46	823.94
09/21/85	57.43	823.97
10/25/85	57.35	824.05
12/08/85	57.39	824.01
05/09/86	57.06	824.34
06/07/86	57.31	824.09
07/04/86	57.40	824.00
08/02/86	57.59	823.81
08/31/86	57.68	823.72
10/11/86	57.69	823.71
11/01/86	57.75	823.65
12/06/86	57.26	824.14
04/25/87	57.41	823.99
05/30/87	57.61	823.79
06/27/87	57.99	823.41
08/01/87	57.70	823.70
08/29/87	57.97	823.43
09/26/87	58.01	823.39
10/30/87	58.16	823.24
11/28/87	58.13	823.27
12/19/87	57.89	823.51
04/01/88	57.91	823.49
04/30/88	57.87	823.53
05/28/88	57.93	823.47
06/24/88	58.35	823.05
07/23/88	58.71	822.69
08/20/88	58.72	822.68
08/24/88	58.73	822.67
09/17/88	58.82	822.58
10/14/88	58.70	822.70
11/05/88	58.66	822.74
12/10/88	58.70	822.70
04/22/89	58.47	822.93
05/13/89	58.58	822.82
06/03/89	58.58	822.82
07/01/89	58.80	822.60
07/30/89	59.35	822.05
09/09/89	59.08	822.32
09/30/89	58.96	822.44
10/28/89	59.10	822.30
11/18/89	59.07	822.33
05/05/90	58.95	822.45
05/28/90	58.93	822.47
06/30/90	59.05	822.35
08/04/90	59.45	821.95
09/01/90	59.55	821.85
09/29/90	59.70	821.70
10/27/90	59.64	821.76
11/17/90	59.62	821.78
12/08/90	59.50	821.90
03/30/91	59.37	822.03
05/11/91	59.39	822.01
06/01/91	59.35	822.05
07/13/91	59.56	821.84
08/09/91	59.75	821.65
08/31/91	59.85	821.55
09/28/91	59.92	821.48
10/19/91	59.93	821.47
11/16/91	59.86	821.54
12/20/91	59.80	821.60
04/17/92	59.74	821.66
05/20/92	59.78	821.62
06/13/92	59.95	821.45
07/26/92	59.83	821.57
08/27/92	59.74	821.66
09/24/92	59.81	821.59
10/17/92	60.01	821.39
11/11/92	59.86	821.54
12/05/92	59.88	821.52
05/01/93	59.83	821.57
06/05/93	59.87	821.53
08/05/93	59.52	821.88
08/28/93	59.82	821.58
09/25/93	59.89	821.51
10/18/93	59.94	821.46
11/11/93	59.96	821.44
04/16/94	59.90	821.50
05/15/94	59.90	821.50
06/11/94	60.02	821.38
07/23/94	60.10	821.30
07/27/94	60.08	821.32
08/20/94	60.18	821.22
09/24/94	60.05	821.35
10/28/94	59.85	821.55
11/26/94	60.08	821.32
04/29/95	60.12	821.28
05/28/95	60.10	821.30
07/01/95	60.28	821.12
08/05/95	59.37	822.03
09/09/95	60.48	820.92
10/27/95	60.12	821.28
11/21/95	60.33	821.07
06/04/96	60.28	821.12
06/30/96	60.44	820.96
07/28/96	60.65	820.75
08/24/96	60.85	820.55
10/05/96	60.79	820.61
11/02/96	60.70	820.70

141-049-28BBB
West Fargo North Aquifer

MP Elev (msl,ft)=888.5
SI (ft.)=205-208

Date	Depth to Water (ft)	WL Elev (msl, ft)
09/08/81	79.21	809.29
08/24/82	80.22	808.28
11/17/82	79.34	809.16
04/18/83	79.09	809.41
06/22/83	79.58	808.92
07/28/83	79.86	808.64
08/17/83	80.34	808.16
09/14/83	80.10	808.40
10/11/83	79.73	808.77
11/08/83	79.75	808.75
12/14/83	79.52	808.98
04/10/84	79.63	808.87
05/15/84	79.79	808.71
06/20/84	79.88	808.62
07/11/84	80.13	808.37
08/08/84	81.17	807.33
09/11/84	81.07	807.43
10/09/84	80.79	807.71
10/30/84	80.31	808.19
12/04/84	80.32	808.18
04/09/85	80.19	808.31
05/03/85	80.31	808.19
06/09/85	80.31	808.19
07/08/85	80.61	807.89
08/18/85	80.89	807.61
09/21/85	80.68	807.82
10/25/85	80.60	807.90
12/08/85	80.65	807.85
05/09/86	80.23	808.27
06/07/86	80.89	807.61
07/04/86	80.93	807.57
08/02/86	81.07	807.43
08/31/86	81.06	807.44
10/11/86	80.90	807.60
11/01/86	80.83	807.67
12/06/86	80.48	808.02
04/25/87	80.90	807.60
05/30/87	80.99	807.51
06/27/87	81.10	807.40
08/01/87	81.46	807.04
08/29/87	81.48	807.02
09/26/87	81.33	807.17
10/30/87	81.36	807.14
11/28/87	81.34	807.16
12/19/87	81.06	807.44
04/01/88	81.14	807.36
04/30/88	81.24	807.26
05/28/88	81.48	807.02
06/24/88	82.09	806.41
07/23/88	82.52	805.98
08/20/88	82.23	806.27
08/24/88	82.23	806.27
09/17/88	82.20	806.30
10/14/88	83.00	805.50
11/05/88	81.83	806.67
12/10/88	81.83	806.67
04/22/89	81.70	806.80
05/13/89	82.02	806.48
06/03/89	82.04	806.46
07/01/89	82.40	806.10
07/30/89	83.25	805.25
09/09/89	82.63	805.87
09/30/89	82.50	806.00
10/28/89	82.55	805.95
11/18/89	82.45	806.05
05/05/90	82.41	806.09
05/26/90	82.56	805.94
06/30/90	82.58	805.92
08/04/90	83.07	805.43
09/01/90	83.25	805.25
09/29/90	83.29	805.21
10/27/90	83.10	805.40
11/17/90	83.10	805.40
12/08/90	83.01	805.49
03/30/91	82.88	805.62
05/11/91	82.83	805.67
06/01/91	83.04	805.46
07/13/91	83.17	805.33
08/09/91	83.55	804.95
08/31/91	83.59	804.91
09/28/91	83.50	805.00
10/19/91	83.50	805.00
11/16/91	83.47	805.03
12/20/91	83.38	805.12
04/17/92	83.34	805.16
05/20/92	83.53	804.97
06/13/92	83.91	804.59
07/26/92	83.56	804.94
08/27/92	83.83	804.67
09/24/92	83.49	805.01
10/17/92	83.83	804.67
11/11/92	83.52	804.98
12/05/92	83.55	804.95
05/01/93	83.51	804.99
06/05/93	83.67	804.83
08/05/93	83.11	805.39
08/28/93	83.69	804.81
09/25/93	83.58	804.92
10/17/93	83.65	804.85
11/11/93	83.60	804.90
04/16/94	83.57	804.93
05/15/94	83.63	804.87
06/11/94	84.00	804.50
07/23/94	83.94	804.56
07/27/94	84.03	804.47
08/20/94	84.16	804.34
09/24/94	83.98	804.52
10/28/94	83.70	804.80
11/26/94	83.70	804.80
04/29/95	85.95	802.55
05/28/95	84.03	804.47
07/01/95	84.48	804.02
08/05/95	84.42	804.08
09/09/95	84.51	803.99
10/27/95	84.02	804.48
11/21/95	84.32	804.18
06/04/96	84.32	804.18
06/30/96	84.50	804.00
07/28/96	84.73	803.77
08/24/96	84.95	803.55
10/05/96	84.80	803.70

141-049-30AAB MP Elev (msl,ft)=888.1

West Fargo North Aquifer SI (ft.)=180-186

Date	Depth to Water (ft)	WL Elev (msl, ft)
09/08/81	69.39	818.71
08/24/82	70.14	817.96
11/17/82	69.52	818.58
04/19/83	69.30	818.80
06/22/83	70.17	817.93
07/28/83	69.84	818.26
08/17/83	70.69	817.41
09/14/83	70.67	817.43
10/11/83	70.44	817.66
11/08/83	70.39	817.71
12/14/83	70.16	817.94
04/10/84	70.32	817.78
05/15/84	70.40	817.70
06/20/84	70.49	817.61
07/11/84	70.84	817.26
08/08/84	71.60	816.50
09/11/84	71.70	816.40
10/09/84	71.51	816.59
12/04/84	70.92	817.18
04/09/85	70.84	817.26
05/04/85	70.94	817.16
06/09/85	70.87	817.23
07/08/85	71.02	817.08
08/18/85	71.31	816.79
09/21/85	71.33	816.77
10/25/85	71.16	816.94
12/08/85	71.25	816.85
05/09/86	70.92	817.18
06/07/86	71.41	816.69
07/04/86	71.38	816.72
08/02/86	71.70	816.40
08/31/86	71.60	816.50
10/11/86	71.54	816.56
11/01/86	71.60	816.50
12/06/86	71.64	816.46
04/25/87	71.48	816.62
05/30/87	71.57	816.53
06/27/87	71.95	816.15
08/01/87	72.07	816.03
08/29/87	72.08	816.02
09/26/87	71.85	816.25
10/30/87	72.09	816.01
11/28/87	72.01	816.09
12/19/87	71.78	816.32
04/01/88	71.78	816.32
04/30/88	71.75	816.35
05/28/88	71.93	816.17
06/24/88	72.63	815.47
07/23/88	73.14	814.96
08/20/88	73.07	815.03
08/24/88	72.87	815.23
09/17/88	72.76	815.34
10/14/88	72.60	815.50
11/05/88	72.48	815.62
12/10/88	72.47	815.63
04/22/89	72.22	815.88
05/13/89	73.40	814.70
06/03/89	72.53	815.57
07/01/89	72.91	815.19
07/30/89	73.93	814.17
09/09/89	73.17	814.93
09/30/89	73.02	815.08
10/28/89	72.81	815.29
11/18/89	72.95	815.15
05/05/90	72.86	815.24
05/28/90	72.92	815.18
06/30/90	72.93	815.17
08/04/90	73.65	814.45
09/01/90	73.80	814.30
09/29/90	73.69	814.41
10/27/90	73.53	814.57
11/17/90	73.54	814.56
12/08/90	73.48	814.62
03/30/91	73.27	814.83
05/11/91	73.19	814.91
06/01/91	73.31	814.79
07/13/91	73.54	814.56
08/09/91	73.82	814.28
08/31/91	74.04	814.06
09/28/91	73.94	814.16
10/19/91	73.98	814.12
11/16/91	73.88	814.22
12/20/91	73.80	814.30
04/17/92	73.74	814.36
05/20/92	73.84	814.26
06/13/92	74.18	813.92
07/26/92	73.88	814.22
08/27/92	74.18	813.92
09/24/92	73.88	814.22
10/17/92	74.06	814.04
11/11/92	73.92	814.18
12/05/92	73.91	814.19
05/01/93	73.92	814.18
06/05/93	73.98	814.12
08/05/93	73.67	814.43
08/28/93	73.88	814.22
09/25/93	73.99	814.11
10/17/93	74.05	814.05
11/11/93	74.05	814.05
04/16/94	74.06	814.04
05/15/94	74.08	814.02
06/11/94	74.33	813.77
07/23/94	74.23	813.87
07/27/94	74.28	813.82
08/20/94	74.42	813.68
09/24/94	74.32	813.78
10/28/94	74.10	814.00
11/26/94	74.26	813.84
04/29/95	74.30	813.80
05/28/95	74.34	813.76
07/01/95	74.56	813.54
08/05/95	74.44	813.66
09/09/95	74.74	813.36
10/27/95	74.44	813.66
11/21/95	74.59	813.51
06/04/96	74.57	813.53
06/30/96	74.72	813.38
07/28/96	75.00	813.10
08/24/96	75.13	812.97
10/05/96	75.00	813.10
11/02/96	74.90	813.20

141-049-30BBB MP Elev (msl,ft)=889.96

West Fargo North Aquifer SI (ft.)=158-161

Date	Depth to Water (ft)	WL Elev (msl, ft)
09/08/81	70.62	819.34
08/24/82	71.15	818.81
11/17/82	70.63	819.33
04/19/83	70.39	819.57
06/22/83	71.10	818.86
07/28/83	71.31	818.65
08/17/83	71.69	818.27
09/14/83	71.59	818.37
10/11/83	71.69	818.27
11/08/83	71.32	818.64
12/14/83	71.12	818.84
04/10/84	71.27	818.69
05/15/84	71.34	818.62
06/20/84	71.42	818.54
07/11/84	71.72	818.24
08/08/84	72.58	817.38
09/11/84	72.53	817.43
10/09/84	72.45	817.51
10/30/84	71.97	817.99
12/04/84	71.89	818.07
04/09/85	71.81	818.15
05/04/85	71.43	818.53
06/09/85	71.82	818.14
07/08/85	71.99	817.97
08/18/85	72.29	817.67
09/21/85	72.17	817.79
10/25/85	72.14	817.82
12/08/85	72.12	817.84
05/09/86	71.78	818.18
06/07/86	72.29	817.67
07/04/86	72.25	817.71
08/02/86	72.22	817.74
08/31/86	72.47	817.49
10/11/86	72.46	817.50
11/01/86	72.19	817.77
12/06/86	72.17	817.79
04/25/87	72.40	817.56
05/30/87	72.57	817.39
06/27/87	72.85	817.11
08/01/87	72.92	817.04
08/29/87	72.92	817.04
09/26/87	72.79	817.17
10/30/87	72.94	817.02
11/28/87	72.89	817.07
12/19/87	72.61	817.35
04/01/88	72.69	817.27
04/30/88	72.71	817.25
05/28/88	72.86	817.10
06/24/88	73.57	816.39
07/23/88	74.02	815.94
08/20/88	73.57	816.39
08/25/88	73.87	816.09
09/17/88	73.72	816.24
10/14/88	73.54	816.42
11/05/88	73.47	816.49
12/10/88	73.44	816.52
04/22/89	73.20	816.76
05/13/89	73.37	816.59
06/03/89	73.50	816.46
07/01/89	73.84	816.12
07/30/89	73.44	816.52
09/09/89	74.11	815.85
09/30/89	73.94	816.02
10/28/89	73.99	815.97
11/18/89	73.91	816.05
05/05/90	73.84	816.12
05/28/90	73.88	816.08
08/04/90	74.57	815.39
09/01/90	74.72	815.24
09/29/90	74.65	815.31
10/27/90	74.85	815.11
11/08/90	75.55	814.41
11/17/90	74.94	815.02
12/08/90	74.86	815.10
03/30/91	74.66	815.30
05/11/91	74.59	815.37
06/01/91	74.70	815.26
07/13/91	74.61	815.35
08/09/91	75.19	814.77
08/31/91	75.41	814.55
09/28/91	75.33	814.63
10/19/91	75.37	814.59
11/16/91	75.26	814.70
12/20/91	75.17	814.79
04/17/92	75.13	814.83
05/20/92	75.23	814.73
06/13/92	75.53	814.43
07/26/92	75.26	814.70
08/27/92	75.71	814.25
09/24/92	75.29	814.67
10/17/92	75.46	814.50
11/11/92	75.30	814.66
12/05/92	75.29	814.67
05/01/93	75.31	814.65
06/05/93	75.35	814.61
08/05/93	74.98	814.98
08/28/93	75.27	814.69
09/25/93	75.39	814.57
10/17/93	75.42	814.54
11/11/93	75.43	814.53
04/16/94	75.43	814.53
05/15/94	75.44	814.52
06/11/94	75.72	814.24
07/23/94	75.62	814.34
08/20/94	75.80	814.16
09/24/94	75.81	814.15
10/28/94	75.48	814.48
11/26/94	75.66	814.30
04/29/95	75.71	814.25
05/28/95	75.71	814.25
07/01/95	76.10	813.86
08/05/95	76.02	813.94
09/09/95	76.15	813.81
10/27/95	75.80	814.16
11/21/95	76.00	813.96
06/04/96	76.05	813.91
06/30/96	76.20	813.76
07/28/96	76.49	813.47
08/24/96	76.59	813.37
10/05/96	76.50	813.46
11/02/96	76.41	813.55

141-049-32CCD
West Fargo North Aquifer

MP Elev (msl,ft)=889.3
SI (ft.)=144-147

Date	Depth to Water (ft)	WL Elev (msl, ft)
09/08/81	83.54	805.76
08/24/82	83.97	805.33
11/17/82	83.41	805.89
04/19/83	83.19	806.11
06/22/83	84.39	804.91
07/28/83	83.49	805.81
08/17/83	84.99	804.31
09/14/83	84.78	804.52
10/11/83	84.47	804.83
11/08/83	84.46	804.84
12/14/83	84.18	805.12
04/10/84	84.26	805.04
05/15/84	84.51	804.79
06/20/84	84.60	804.70
07/11/84	85.12	804.18
08/08/84	85.63	803.67
09/11/84	85.72	803.58
10/09/84	85.49	803.81
10/30/84	85.30	804.00
12/04/84	85.04	804.26
04/09/85	84.86	804.44
05/04/85	84.85	804.45
06/09/85	85.05	804.25
07/08/85	85.49	803.81
08/18/85	85.47	803.83
09/21/85	85.46	803.84
10/25/85	85.28	804.02
12/08/85	85.44	803.86
05/09/86	84.06	805.24
06/07/86	85.63	803.67
07/04/86	85.64	803.66
08/02/86	85.82	803.48
08/31/86	85.80	803.50
10/11/86	85.83	803.47
11/01/86	85.91	803.39
12/06/86	85.78	803.52
04/25/87	85.66	803.64
05/30/87	85.80	803.50
06/27/87	86.15	803.15
08/01/87	86.23	803.07
08/29/87	86.20	803.10
09/26/87	86.02	803.28
10/30/87	86.24	803.06
11/28/87	86.17	803.13
12/19/87	85.83	803.47
04/02/88	85.60	803.70
04/30/88	85.83	803.47
05/28/88	86.05	803.25
06/24/88	86.58	802.72
07/23/88	87.02	802.28
08/20/88	86.80	802.50
08/25/88	86.84	802.46
09/17/88	86.82	802.48
10/14/88	86.55	802.75
11/05/88	86.57	802.73
12/10/88	86.73	802.57
04/22/89	86.27	803.03
05/13/89	86.67	802.63
06/03/89	86.80	802.50
07/01/89	87.03	802.27
07/30/89	87.86	801.44
09/09/89	87.40	801.90
09/30/89	87.08	802.22
10/28/89	87.31	801.99
11/18/89	87.16	802.14
05/05/90	87.19	802.11
05/26/90	87.33	801.97
06/30/90	87.41	801.89
08/04/90	87.89	801.41
09/01/90	88.06	801.24
09/29/90	88.10	801.20
10/27/90	88.01	801.29
11/17/90	87.87	801.43
12/08/90	87.78	801.52
03/30/91	87.26	802.04
05/11/91	87.67	801.63
06/01/91	87.84	801.46
07/13/91	87.95	801.35
08/09/91	88.25	801.05
08/31/91	88.45	800.85
09/28/91	88.33	800.97
10/19/91	88.37	800.93
11/16/91	88.37	800.93
12/20/91	88.35	800.95
04/17/92	88.09	801.21
05/20/92	88.31	800.99
06/13/92	88.22	801.08
07/26/92	88.35	800.95
08/27/92	88.57	800.73
09/24/92	88.18	801.12
10/17/92	88.57	800.73
11/11/92	88.30	801.00
12/05/92	88.32	800.98
05/01/93	88.37	800.93
06/05/93	88.50	800.80
08/06/93	88.00	801.30
08/28/93	88.39	800.91
09/25/93	88.32	800.98
10/17/93	88.49	800.81
11/11/93	88.48	800.82
04/16/94	88.48	800.82
05/15/94	88.57	800.73
06/11/94	88.70	800.60
07/23/94	88.70	800.60
08/20/94	89.01	800.29
09/24/94	88.92	800.38
10/28/94	88.36	800.94
11/26/94	88.70	800.60
04/29/95	88.87	800.43
05/28/95	88.80	800.50
07/01/95	89.31	799.99
08/05/95	89.10	800.20
09/09/95	89.40	799.90
10/27/95	88.75	800.55
11/21/95	89.24	800.06
06/04/96	89.22	800.08
06/30/96	89.53	799.77
07/28/96	89.67	799.63
08/24/96	89.66	799.64
10/05/96	89.55	799.75
11/02/96	89.74	799.56

141-049-32DCC1
West Fargo North Aquifer

MP Elev (msl,ft)=890.2
SI (ft.)=240-246

Date	Depth to Water (ft)	WL Elev (msl, ft)
09/08/81	84.04	806.16
08/24/82	84.88	805.32
11/17/82	84.01	806.19
04/19/83	83.79	806.41
06/22/83	84.32	805.88
07/28/83	84.48	805.72
08/17/83	84.93	805.27
09/14/83	84.77	805.43
10/11/83	84.44	805.76
11/08/83	84.44	805.76
12/14/83	84.20	806.00
04/10/84	84.25	805.95
05/15/84	84.50	805.70
06/20/84	84.58	805.62
07/11/84	84.96	805.24
08/08/84	85.58	804.62
09/11/84	85.69	804.51
10/09/84	85.44	804.76
10/30/84	85.13	805.07
12/04/84	85.03	805.17
04/09/85	84.83	805.37
05/04/85	85.00	805.20
06/09/85	85.05	805.15
07/08/85	85.30	804.90
08/18/85	85.45	804.75
09/21/85	85.27	804.93
10/25/85	85.16	805.04
12/08/85	84.83	805.37
05/09/86	85.00	805.20
06/07/86	85.53	804.67
07/04/86	85.51	804.69
08/02/86	85.74	804.46
08/31/86	85.71	804.49
10/11/86	85.77	804.43
11/01/86	85.88	804.32
12/06/86	85.69	804.51
04/25/87	85.60	804.60
05/30/87	85.70	804.50
06/27/87	85.95	804.25
08/01/87	86.13	804.07
08/29/87	86.26	803.94
09/26/87	86.07	804.13
10/30/87	86.29	803.91
11/28/87	86.08	804.12
12/19/87	85.87	804.33
04/02/88	85.73	804.47
04/30/88	85.93	804.27
05/28/88	86.15	804.05
06/15/88	86.86	803.34
06/24/88	86.67	803.53
07/23/88	87.11	803.09
08/20/88	86.90	803.30
09/17/88	86.87	803.33
10/14/88	86.61	803.59
11/05/88	86.60	803.60
12/10/88	86.80	803.40
04/22/89	86.36	803.84
05/13/89	86.75	803.45
06/03/89	86.84	803.36
07/01/89	87.09	803.11
07/30/89	87.92	802.28
09/09/89	87.46	802.74
09/30/89	87.13	803.07
10/28/89	87.37	802.83
11/18/89	87.23	802.97
05/05/90	87.25	802.95
05/26/90	87.41	802.79
06/30/90	87.42	802.78
08/04/90	87.96	802.24
09/01/90	88.13	802.07
09/29/90	88.18	802.02
10/27/90	88.08	802.12
11/17/90	87.92	802.28
12/08/90	87.80	802.40
03/30/91	87.60	802.60
05/11/91	87.74	802.46
06/01/91	88.01	802.19
07/13/91	88.10	802.10
08/09/91	88.32	801.88
08/31/91	88.49	801.71
09/27/91	88.67	801.53
09/28/91	88.37	801.83
10/19/91	88.40	801.80
11/16/91	88.42	801.78
12/20/91	88.42	801.78
04/17/92	88.12	802.08
05/20/92	88.36	801.84
06/13/92	88.57	801.63
07/26/92	88.39	801.81
08/27/92	88.61	801.59
09/24/92	88.22	801.98
10/17/92	88.64	801.56
11/11/92	88.35	801.85
12/05/92	88.37	801.83
05/01/93	88.42	801.78
06/05/93	88.55	801.65
08/06/93	87.95	802.25
08/28/93	88.37	801.83
09/25/93	88.29	801.91
10/17/93	88.47	801.73
11/11/93	88.42	801.78
04/16/94	88.58	801.62
05/15/94	88.64	801.56
06/11/94	88.74	801.46
07/23/94	88.79	801.41
08/20/94	89.05	801.15
09/24/94	88.91	801.29
10/28/94	88.49	801.71
11/26/94	88.30	801.90
04/29/95	89.00	801.20
05/28/95	88.91	801.29
07/01/95	89.24	800.96
08/05/95	89.24	800.96
09/09/95	89.55	800.65
10/27/95	88.88	801.32
11/21/95	89.39	800.81
06/04/96	89.35	800.85
06/30/96	89.65	800.55
07/28/96	89.80	800.40
08/24/96	89.81	800.39
10/05/96	89.70	800.50

141-049-32DCC2
West Fargo North Aquifer

MP Elev (msl,ft)=889.9
SI (ft.)=103-109

Date	Depth to Water (ft)	WL Elev (msl, ft)
09/08/81	84.05	805.85
08/24/82	85.30	804.60
11/17/82	83.87	806.03
04/19/83	83.63	806.27
06/22/83	84.67	805.23
07/28/83	84.88	805.02
08/17/83	85.27	804.63
09/14/83	85.13	804.77
10/11/83	84.72	805.18
11/08/83	84.79	805.11
12/14/83	84.52	805.38
04/10/84	84.59	805.31
05/15/84	84.83	805.07
06/20/84	84.89	805.01
07/11/84	85.30	804.60
08/08/84	85.92	803.98
09/11/84	86.06	803.84
10/09/84	85.83	804.07
10/30/84	85.48	804.42
12/04/84	85.36	804.54
04/09/85	85.11	804.79
06/09/85	85.32	804.58
07/08/85	85.65	804.25
08/18/85	85.78	804.12
09/21/85	85.62	804.28
10/25/85	85.50	804.40
12/08/85	85.80	804.10
05/09/86	85.40	804.50
06/07/86	85.93	803.97
07/04/86	85.95	803.95
08/02/86	86.13	803.77
08/31/86	86.10	803.80
10/11/86	86.15	803.75
11/01/86	86.21	803.69
12/06/86	86.08	803.82
04/25/87	85.99	803.91
05/30/87	86.08	803.82
06/27/87	86.45	803.45
08/01/87	86.52	803.38
08/29/87	86.35	803.55
09/26/87	86.31	803.59
10/30/87	86.55	803.35
11/28/87	86.46	803.44
12/19/87	86.10	803.80
04/02/88	85.95	803.95
04/30/88	86.15	803.75
05/28/88	86.35	803.55
06/15/88	87.07	802.83
06/24/88	86.89	803.01
07/23/88	87.33	802.57
08/20/88	87.10	802.80
09/17/88	87.09	802.81
10/14/88	86.83	803.07
11/05/88	86.83	803.07
12/10/88	86.73	803.17
04/22/89	86.57	803.33
05/13/89	86.95	802.95
06/03/89	87.08	802.82
07/01/89	87.30	802.60
07/30/89	88.12	801.78
09/09/89	87.66	802.24
09/30/89	87.35	802.55
10/28/89	87.60	802.30
11/18/89	87.45	802.45
05/05/90	87.43	802.47
05/26/90	87.63	802.27
06/30/90	87.67	802.23
08/04/90	88.16	801.74
09/01/90	88.35	801.55
09/29/90	88.38	801.52
10/27/90	88.28	801.62
11/17/90	88.14	801.76
12/08/90	88.05	801.85
03/30/91	87.80	802.10
05/11/91	87.94	801.96
06/01/91	88.11	801.79
07/13/91	88.30	801.60
08/09/91	88.53	801.37
08/31/91	88.74	801.16
09/27/91	88.43	801.47
09/28/91	88.60	801.30
10/19/91	88.65	801.25
11/16/91	88.64	801.26
12/20/91	88.66	801.24
04/17/92	88.34	801.56
05/20/92	88.59	801.31
06/13/92	88.78	801.12
07/26/92	88.61	801.29
08/27/92	88.84	801.06
09/24/92	88.44	801.46
10/17/92	88.87	801.03
11/11/92	88.56	801.34
12/05/92	88.61	801.29
05/01/93	88.65	801.25
06/05/93	88.77	801.13
08/06/93	88.29	801.61
08/28/93	88.71	801.19
09/25/93	88.63	801.27
10/17/93	88.79	801.11
11/11/93	88.73	801.17
04/16/94	88.79	801.11
05/15/94	88.87	801.03
06/11/94	88.80	801.10
07/23/94	88.99	800.91
08/20/94	89.25	800.65

141-049-33DCC
West Fargo North Aquifer

MP Elev (msl,ft)=893
SI (ft.)=201-204

Date	Depth to Water (ft)	WL Elev (msl, ft)
09/08/81	87.15	805.85
08/24/82	88.08	804.92
11/17/82	87.27	805.73
03/18/83	86.89	806.11
04/19/83	87.02	805.98
06/22/83	87.60	805.40
07/28/83	87.74	805.26
08/17/83	88.27	804.73
09/14/83	88.09	804.91
10/11/83	87.72	805.28
11/08/83	87.87	805.13
12/14/83	87.53	805.47
04/10/84	87.61	805.39
05/15/84	88.00	805.00
06/20/84	87.97	805.03
07/11/84	88.60	804.40
08/08/84	89.22	803.78
09/11/84	89.07	803.93
10/09/84	88.83	804.17
10/30/84	88.42	804.58
12/04/84	88.39	804.61
04/09/85	88.28	804.72
05/04/85	88.25	804.75
06/09/85	88.15	804.85
07/08/85	88.73	804.27
08/18/85	88.79	804.21
09/21/85	88.79	804.21
10/25/85	88.59	804.41
12/08/85	88.65	804.35
05/09/86	88.32	804.68
06/07/86	88.82	804.18
07/04/86	88.90	804.10
08/02/86	89.05	803.95
08/31/86	89.00	804.00
10/11/86	89.18	803.82
11/01/86	89.18	803.82
12/05/86	89.03	803.97
04/25/87	89.08	803.92
05/30/87	89.09	803.91
06/27/87	89.65	803.35
08/01/87	89.49	803.51
08/29/87	89.47	803.53
09/26/87	89.35	803.65
10/30/87	89.42	803.58
11/28/87	89.39	803.61
12/19/87	89.08	803.92
04/02/88	89.09	803.91
04/30/88	89.33	803.67
05/28/88	89.60	803.40
06/24/88	89.94	803.06
07/23/88	90.49	802.51
08/20/88	89.89	803.11
08/25/88	90.16	802.84
09/17/88	90.17	802.83
10/14/88	89.90	803.10
11/05/88	89.82	803.18
12/10/88	90.09	802.91
04/22/89	89.73	803.27
05/13/89	90.25	802.75
06/03/89	90.17	802.83
07/01/89	90.40	802.60
07/30/89	91.20	801.80
09/09/89	90.72	802.28
09/30/89	90.53	802.47
10/28/89	90.63	802.37
11/18/89	90.53	802.47
05/05/90	90.59	802.41
05/26/90	90.70	802.30
06/30/90	90.68	802.32
08/04/90	91.12	801.88
09/01/90	91.35	801.65
09/29/90	91.49	801.51
10/27/90	91.29	801.71
11/17/90	91.19	801.81
12/08/90	91.18	801.82
03/30/91	90.98	802.02
05/11/91	91.08	801.92
06/01/91	91.13	801.87
07/13/91	91.33	801.67
08/09/91	91.81	801.19
08/31/91	91.78	801.22
09/28/91	91.65	801.35
10/19/91	91.62	801.38
11/16/91	91.73	801.27
12/20/91	91.59	801.41
04/17/92	91.48	801.52
05/20/92	91.72	801.28
06/13/92	91.93	801.07
07/26/92	91.64	801.36
08/27/92	91.92	801.08
09/24/92	91.55	801.45
10/17/92	91.89	801.11
11/11/92	91.61	801.39
12/05/92	91.71	801.29
05/01/93	91.79	801.21
06/05/93	91.76	801.24
08/05/93	91.35	801.65
08/28/93	91.87	801.13
09/25/93	91.67	801.33
10/17/93	91.85	801.15
11/11/93	91.77	801.23
04/16/94	91.73	801.27
05/15/94	91.77	801.23
06/11/94	92.08	800.92
07/23/94	92.09	800.91
08/20/94	92.28	800.72
09/24/94	92.08	800.92
10/28/94	91.69	801.31
11/26/94	92.16	800.84
04/29/95	92.28	800.72
05/28/95	92.11	800.89
07/01/95	92.70	800.30
08/05/95	92.51	800.49
09/09/95	92.76	800.24
10/27/95	91.98	801.02
11/21/95	92.55	800.45
06/04/96	92.55	800.45
06/30/96	92.74	800.26
07/28/96	92.98	800.02
08/24/96	93.17	799.83
10/05/96	92.97	800.03

141-050-09AAA2
Prosper Aquifer

MP Elev (msl,ft)=897.39
SI (ft.)=250-280

Date	Depth to Water (ft)	WL Elev (msl, ft)
09/08/81	33.25	867.75
08/24/82	33.35	867.65
11/17/82	32.97	868.03
07/28/83	32.03	868.97
08/17/83	32.18	868.82
10/11/83	32.11	868.89
11/08/83	32.13	868.87
12/14/83	31.99	869.01
04/10/84	32.08	868.92
05/15/84	32.14	868.86
06/20/84	32.19	868.81
07/11/84	32.28	868.72
08/08/84	32.52	868.48
09/11/84	32.77	868.23
10/09/84	32.78	868.22
10/30/84	32.47	868.53
12/04/84	32.53	868.47
04/09/85	32.21	868.79
06/09/85	32.42	868.58
07/08/85	32.58	868.42
08/18/85	32.78	868.22
09/21/85	32.85	868.15
10/25/85	32.80	868.20
12/08/85	32.65	868.35
05/09/86	32.57	868.43
06/07/86	32.70	868.30
07/04/86	32.85	868.15
08/31/86	33.10	867.90
10/11/86	33.03	867.97
11/01/86	33.13	867.87
12/06/86	32.99	868.01
04/25/87	33.12	867.88
05/30/87	32.99	868.01
06/27/87	33.29	867.71
08/01/87	33.35	867.65
08/29/87	33.97	867.03
09/26/87	33.93	867.07
10/30/87	34.13	866.87
11/28/87	34.11	866.89
12/19/87	33.92	867.08
04/01/88	33.35	867.65
04/30/88	33.42	867.58
05/28/88	33.44	867.56
06/24/88	33.60	867.40
07/23/88	33.81	867.19
08/20/88	33.99	867.01
09/17/88	33.89	867.11
10/14/88	33.79	867.21
11/05/88	33.81	867.19
12/10/88	33.85	867.15
04/22/89	33.80	867.20
05/13/89	33.98	867.02
06/03/89	33.84	867.16
07/01/89	34.04	866.96
07/30/89	34.30	866.70
09/09/89	34.04	866.96
09/30/89	34.07	866.93
10/28/89	34.12	866.88
11/18/89	34.07	866.93
05/05/90	34.10	866.90
05/28/90	34.10	866.90
06/30/90	34.04	866.96
08/04/90	34.32	866.68
09/01/90	34.46	866.54
09/29/90	34.53	866.47
10/27/90	34.47	866.53
11/17/90	34.53	866.47
12/08/90	34.49	866.51
03/30/91	34.42	866.58
05/11/91	34.29	866.71
06/01/91	34.22	866.78
07/13/91	34.42	866.58
08/09/91	34.60	866.40
08/31/91	35.32	865.68
09/28/91	35.32	865.68
10/19/91	35.36	865.64
11/16/91	35.32	865.68
12/20/91	35.27	865.73
04/17/92	34.67	866.33
05/20/92	34.70	866.30
06/13/92	34.80	866.20
07/26/92	34.63	866.37
08/27/92	34.77	866.23
09/24/92	34.65	866.35
10/17/92	34.80	866.20
11/11/92	34.69	866.31
12/05/92	34.61	866.39
05/01/93	34.81	866.19
06/05/93	34.78	866.22
09/25/93	34.85	866.15
10/17/93	34.89	866.11
11/11/93	34.90	866.10
04/16/94	34.85	862.54
05/15/94	34.82	862.57
06/11/94	35.08	862.31
07/23/94	34.84	862.55
07/27/94	34.98	866.02
08/20/94	34.95	862.44
09/24/94	34.86	862.53
10/29/94	36.77	860.62
11/26/94	36.87	860.52
04/29/95	36.92	860.47
05/28/95	36.93	860.46
07/01/95	37.05	860.34
08/05/95	37.08	860.31
09/09/95	37.09	860.30
10/27/95	37.60	859.79
11/21/95	37.57	859.82
06/04/96	37.01	860.38
06/30/96	37.20	860.19
07/28/96	37.38	860.01
08/24/96	37.56	859.83
10/05/96	37.38	860.01
11/02/96	37.30	860.09
11/13/96	37.40	859.99

141-050-15DAA
Prosper Aquifer

MP Elev (msl,ft)=894.61
SI (ft.)=138-143

Date	Depth to Water (ft)	WL Elev (msl, ft)
12/20/91	36.04	858.57
04/17/92	35.98	858.63
05/20/92	36.01	858.60
06/13/92	36.13	858.48
07/26/92	35.96	858.65
08/27/92	36.11	858.50
09/24/92	35.96	858.65
10/17/92	36.15	858.46
11/11/92	36.03	858.58
12/05/92	36.09	858.52
05/01/93	36.07	858.54
06/05/93	36.07	858.54
08/05/93	35.87	858.74
08/28/93	36.01	858.60
09/25/93	36.08	858.53
10/17/93	36.07	858.54
11/11/93	36.08	858.53
04/16/94	36.03	858.58
05/15/94	36.01	858.60
06/11/94	36.16	858.45
07/23/94	36.09	858.52
07/27/94	36.12	858.49
08/20/94	36.21	858.40
09/24/94	36.13	858.48
10/28/94	35.92	858.69
11/26/94	36.09	858.52
04/29/95	35.45	859.16
05/28/95	36.15	858.46
07/01/95	36.35	858.26
08/05/95	36.28	858.33
09/09/95	36.53	858.08
10/27/95	37.08	857.53
11/21/95	37.23	857.38
06/04/96	37.31	857.30
06/30/96	37.36	857.25
07/28/96	37.65	856.96
08/24/96	37.92	856.69
10/05/96	37.60	857.01
11/02/96	37.55	857.06

141-050-23CCC1
Prosper Aquifer

MP Elev (msl,ft)=892.81
SI (ft.)=278-283

Date	Depth to Water (ft)	WL Elev (msl, ft)
11/16/91	34.89	857.92
12/20/91	34.85	857.96
04/17/92	34.83	857.98
05/20/92	34.86	857.95
06/13/92	34.98	857.83
07/26/92	34.80	858.01
08/27/92	34.96	857.85
09/24/92	34.81	858.00
10/17/92	34.99	857.82
11/11/92	34.88	857.93
12/05/92	34.90	857.91
05/01/93	34.97	857.84
06/05/93	34.94	857.87
08/05/93	34.74	858.07
08/28/93	34.90	857.91
09/25/93	34.94	857.87
10/17/93	35.01	857.80
11/11/93	35.02	857.79
04/16/94	34.98	857.83
05/15/94	34.96	857.85
06/11/94	35.06	857.75
07/23/94	35.02	857.79
07/27/94	35.12	857.69
08/20/94	35.11	857.70
09/24/94	35.05	857.76
10/28/94	36.22	856.59
11/26/94	36.38	856.43
04/29/95	36.45	856.36
05/28/95	36.48	856.33
07/01/95	36.69	856.12
08/05/95	36.90	855.91
09/09/95	36.70	856.11
10/27/95	36.43	856.38
11/21/95	36.58	856.23
06/04/96	36.67	856.14
06/30/96	36.76	856.05
07/28/96	37.02	855.79
08/24/96	37.12	855.69
10/05/96	36.98	855.83
11/02/96	36.89	855.92
11/13/96	36.80	856.01

141-050-23CCC2
Prosper Aquifer

MP Elev (msl,ft)=892.61
Sl (ft.)=130-135

Date	Depth to Water (ft)	WL Elev (msl, ft)
11/16/91	34.83	857.78
12/20/91	34.78	857.83
04/17/92	34.78	857.83
05/20/92	34.80	857.81
06/13/92	34.94	857.67
07/26/92	34.76	857.85
08/27/92	34.84	857.77
09/24/92	34.79	857.82
10/17/92	34.94	857.67
11/11/92	34.85	857.76
12/05/92	34.83	857.78
05/01/93	34.92	857.69
06/05/93	34.89	857.72
08/05/93	34.71	857.90
08/28/93	34.85	857.76
09/25/93	34.92	857.69
10/17/93	34.97	857.64
11/11/93	34.99	857.62
04/16/94	34.95	857.66
05/15/94	34.92	857.69
06/11/94	35.08	857.53
07/23/94	35.00	857.61
07/27/94	35.03	857.58
08/20/94	35.13	857.48
09/24/94	35.06	857.55
10/28/94	36.51	856.10
11/26/94	36.61	856.00
04/29/95	36.80	855.81
05/28/95	36.78	855.83
07/01/95	37.01	855.60
08/05/95	37.00	855.61
09/09/95	36.92	855.69
10/27/95	36.78	855.83
11/21/95	36.90	855.71
06/04/96	37.00	855.61
06/30/96	37.09	855.52
07/28/96	37.33	855.28
08/24/96	37.47	855.14
10/05/96	37.32	855.29
11/02/96	37.25	855.36
11/13/96	37.32	855.29

141-050-23DDD
Prosper Aquifer

MP Elev (msl,ft)=890.2
Sl (ft.)=118-121

Date	Depth to Water (ft)	WL Elev (msl, ft)
09/08/81	51.92	838.28
08/24/82	37.39	852.81
11/17/82	38.46	851.74
04/19/83	36.59	853.61
07/28/83	35.84	854.36
08/17/83	35.69	854.51
09/14/83	35.97	854.23
10/11/83	35.55	854.65
11/08/83	35.57	854.63
12/14/83	35.14	855.06
04/10/84	34.71	855.49
05/15/84	34.91	855.29
06/20/84	34.75	855.45
07/11/84	34.58	855.62
08/08/84	34.33	855.87
09/11/84	34.72	855.48
10/09/84	34.92	855.28
10/30/84	35.07	855.13
12/04/84	34.97	855.23
04/09/85	34.56	855.64
05/04/85	33.29	856.91
06/09/85	34.50	855.70
07/08/85	34.55	855.65
08/18/85	34.62	855.58
09/21/85	34.56	855.64
10/25/85	34.47	855.73
12/08/85	34.95	855.25
05/09/86	34.47	855.73
06/07/86	34.51	855.69
07/04/86	34.26	855.94
08/02/86	34.68	855.52
08/31/86	34.62	855.58
10/11/86	34.99	855.21
11/01/86	35.25	854.95
12/06/86	35.14	855.06
04/25/87	34.80	855.40
05/30/87	34.57	855.63
06/27/87	34.20	856.00
08/01/87	34.57	855.63
08/29/87	34.79	855.41
09/26/87	34.54	855.66
10/30/87	35.07	855.13
11/28/87	35.17	855.03
12/19/87	34.65	855.55
04/01/88	35.01	855.19
04/30/88	34.58	855.62
05/28/88	34.38	855.82
06/24/88	34.53	855.67
07/23/88	34.73	855.47
08/20/88	34.73	855.47
08/24/88	34.74	855.46
09/17/88	34.77	855.43
10/14/88	34.74	855.46
11/05/88	34.95	855.25
12/10/88	35.60	854.60
04/22/89	34.72	855.48
05/13/89	34.98	855.22
06/03/89	35.12	855.08
07/01/89	34.97	855.23
07/30/89	35.18	855.02
09/09/89	35.24	854.96
09/30/89	34.92	855.28
10/28/89	35.35	854.85
11/18/89	35.25	854.95
05/05/90	35.47	854.73
05/28/90	35.40	854.80
06/30/90	35.50	854.70
08/04/90	35.66	854.54
09/01/90	35.62	854.58
09/29/90	35.85	854.35
10/27/90	35.85	854.35
11/17/90	35.70	854.50
12/08/90	35.51	854.69
03/30/91	35.42	854.78
05/11/91	35.68	854.52
06/01/91	35.56	854.64
07/13/91	35.89	854.31
08/09/91	35.82	854.38
08/31/91	36.03	854.17
09/28/91	35.92	854.28
10/19/91	35.98	854.22
11/16/91	36.13	854.07
12/20/91	36.23	853.97
04/17/92	35.77	854.43
05/20/92	35.82	854.38
06/13/92	35.75	854.45
07/26/92	35.96	854.24
08/27/92	36.16	854.04
09/24/92	35.59	854.61
10/17/92	36.29	853.91
11/11/92	35.93	854.27
12/05/92	36.09	854.11
05/01/93	36.12	854.08
06/05/93	35.93	854.27
08/05/93	36.07	854.13
08/28/93	35.96	854.24
09/25/93	35.80	854.40
10/17/93	36.03	854.17
11/11/93	36.05	854.15
04/16/94	36.03	854.17
05/15/94	36.05	854.15
06/11/94	35.79	854.41
07/23/94	36.04	854.16
08/20/94	36.14	854.06
09/24/94	36.15	854.05
10/28/94	35.53	854.67
11/26/94	36.22	853.98
04/29/95	36.18	854.02
05/28/95	36.02	854.18
07/01/95	36.24	853.96
08/05/95	36.61	853.59
09/09/95	36.45	853.75
10/27/95	35.60	854.60
11/21/95	36.35	853.85
06/04/96	36.07	854.13
06/30/96	36.24	853.96
07/28/96	36.34	853.86
08/24/96	36.16	854.04
10/05/96	36.14	854.06
11/02/96	36.73	853.47

141-050-28AAA — MP Elev (msl,ft)=896.5

Prosper Aquifer — Sl (ft.)=278-283

Date	Depth to Water (ft)	WL Elev (msl, ft)
06/28/83	36.53	859.97
07/28/83	36.61	859.89
08/11/83	36.60	859.90
09/14/83	36.60	859.90
10/11/83	36.49	860.01
11/08/83	36.52	859.98
12/14/83	36.37	860.13
04/10/84	36.17	860.33
05/15/84	36.25	860.25
06/20/84	36.20	860.30
07/11/84	36.45	860.05
08/08/84	36.73	859.77
09/11/84	36.97	859.53
10/09/84	36.97	859.53
10/30/84	36.62	859.88
12/04/84	36.69	859.81
04/09/85	36.68	859.82
06/09/85	36.39	860.11
07/08/85	36.84	859.66
08/18/85	36.87	859.63
09/21/85	37.06	859.44
10/25/85	37.03	859.47
12/08/85	37.04	859.46
05/09/86	36.85	859.65
06/07/86	37.01	859.49
07/04/86	37.14	859.36
08/02/86	37.27	859.23
08/31/86	37.32	859.18
10/11/86	37.30	859.20
11/01/86	37.40	859.10
12/06/86	37.27	859.23
04/25/87	37.41	859.09
05/30/87	37.31	859.19
06/27/87	37.63	858.87
08/01/87	37.69	858.81
08/29/87	37.65	858.85
09/26/87	37.61	858.89
10/30/87	37.85	858.65
11/28/87	37.85	858.65
12/19/87	37.67	858.83
04/01/88	37.71	858.79
04/30/88	37.67	858.83
05/28/88	37.73	858.77
06/24/88	37.99	858.51
07/23/88	38.30	858.20
08/20/88	38.27	858.23
08/25/88	38.32	858.18
09/17/88	38.60	857.90
10/14/88	38.47	858.03
11/05/88	38.48	858.02
12/10/88	38.50	858.00
04/22/89	38.07	858.43
05/13/89	38.14	858.36
06/03/89	38.08	858.42
07/01/89	38.40	858.10
07/30/89	38.78	857.72
09/09/89	38.43	858.07
09/30/89	38.43	858.07
10/28/89	38.50	858.00
11/18/89	38.07	858.43
05/05/90	38.45	858.05
05/28/90	38.45	858.05
06/30/90	38.45	858.05
08/04/90	38.83	857.67
09/01/90	38.89	857.61
09/29/90	38.92	857.58
10/27/90	38.87	857.63
11/17/90	39.02	857.48
12/08/90	38.94	857.56
03/30/91	38.75	857.75
05/11/91	38.64	857.86
06/01/91	38.63	857.87
07/13/91	38.81	857.69
08/09/91	38.95	857.55
08/31/91	39.09	857.41
09/28/91	39.11	857.39
10/19/91	39.14	857.36
11/16/91	39.10	857.40
12/20/91	39.05	857.45
04/17/92	39.04	857.46
05/20/92	39.08	857.42
06/13/92	39.19	857.31
07/26/92	39.26	857.24
08/27/92	39.37	857.13
09/24/92	39.34	857.16
10/17/92	39.38	857.12
11/11/92	40.15	856.35
12/05/92	39.35	857.15
04/16/94	40.45	856.05
05/15/94	40.42	856.08
06/11/94	40.52	855.98
07/23/94	40.46	856.04
07/27/94	40.53	855.97
08/20/94	40.63	855.87
09/24/94	40.55	855.95
10/28/94	41.33	855.17
11/26/94	41.28	855.22
04/29/95	41.56	854.94
05/28/95	41.92	854.58
07/01/95	41.92	854.58
08/05/95	41.80	854.70
09/09/95	41.89	854.61
10/27/95	41.59	854.91
11/21/95	41.74	854.76
06/04/96	41.84	854.66
06/30/96	41.92	854.58
07/28/96	42.20	854.30
08/24/96	42.29	854.21
10/05/96	42.14	854.36
11/02/96	42.08	854.42

141-050-33DDD — MP Elev (msl,ft)=896.77

Prosper Aquifer — Sl (ft.)=108-113

Date	Depth to Water (ft)	WL Elev (msl, ft)
11/11/93	39.22	857.55
04/16/94	39.18	857.59
05/15/94	39.16	857.61
06/11/94	39.28	857.49
07/23/94	39.22	857.55
07/27/94	39.27	857.50
08/20/94	39.37	857.40
09/24/94	39.30	857.47
10/28/94	39.37	857.40
11/26/94	39.24	857.53
04/29/95	39.30	857.47
05/28/95	39.34	857.43
07/01/95	39.60	857.17
08/05/95	39.52	857.25
09/09/95	39.60	857.17
10/27/95	39.32	857.45
11/21/95	39.45	857.32
06/30/96	39.58	857.19
07/28/96	39.82	856.95
08/24/96	39.94	856.83
10/05/96	39.80	856.97

142-049-22DDD — MP Elev (msl,ft)=877.8

West Fargo North Aquifer — Sl (ft.)=228-234

Date	Depth to Water (ft)	WL Elev (msl, ft)
09/08/81	31.61	846.19
11/16/82	31.47	846.33
04/10/84	32.17	845.63
05/15/84	32.22	845.58
06/20/84	32.19	845.61
07/11/84	32.41	845.39
08/08/84	32.64	845.16
09/11/84	32.86	844.94
10/09/84	32.92	844.88
10/30/84	32.69	845.11
12/04/84	32.77	845.03
04/09/85	32.16	845.64
05/04/85	32.85	844.95
06/09/85	32.76	845.04
07/08/85	32.89	844.91
08/18/85	33.08	844.72
09/21/85	33.13	844.67
10/25/85	33.05	844.75
12/08/85	33.00	844.80
05/09/86	32.83	844.97
06/07/86	32.91	844.89
07/04/86	32.94	844.86
08/02/86	33.87	843.93
08/31/86	33.13	844.67
10/11/86	33.12	844.68
11/01/86	33.22	844.58
12/06/86	33.15	844.65
04/25/87	33.27	844.53
05/30/87	33.11	844.69
06/27/87	33.28	844.52
08/01/87	33.25	844.55
08/29/87	33.33	844.47
09/26/87	33.32	844.48
10/30/87	33.51	844.29
11/28/87	33.52	844.28
12/19/87	33.32	844.48
04/01/88	33.49	844.31
04/30/88	33.46	844.34
05/28/88	33.44	844.36
06/24/88	33.57	844.23
07/23/88	33.74	844.06
08/20/88	33.77	844.03
08/24/88	33.85	843.95
09/17/88	33.88	843.92
10/14/88	33.95	843.85
11/05/88	34.27	843.53
12/10/88	34.05	843.75
04/22/89	33.84	843.96
05/13/89	33.87	843.93
06/03/89	33.88	843.92
07/01/89	34.03	843.77
07/30/89	34.15	843.65
09/09/89	33.96	843.84
09/30/89	33.93	843.87
10/28/89	34.07	843.73
11/18/89	34.04	843.76
05/05/90	34.13	843.67
05/28/90	34.15	843.65
06/30/90	34.28	843.52
08/04/90	34.55	843.25
09/01/90	34.59	843.21
09/29/90	34.59	843.21
10/27/90	34.63	843.17
11/17/90	34.65	843.15
12/08/90	34.60	843.20
03/30/91	34.53	843.27
05/11/91	34.57	843.23
06/12/91	34.72	843.08
07/13/91	34.89	842.91
08/09/91	34.98	842.82
08/31/91	35.00	842.80
09/28/91	34.99	842.81
10/19/91	35.02	842.78
11/16/91	34.99	842.81
12/20/91	35.01	842.79
04/17/92	35.08	842.72
05/20/92	35.16	842.64
06/13/92	35.20	842.60
07/26/92	35.08	842.72
08/27/92	35.21	842.59
09/24/92	35.07	842.73
10/17/92	35.26	842.54
11/11/92	35.22	842.58
12/05/92	35.20	842.60
05/01/93	35.22	842.58
06/05/93	35.19	842.61
08/05/93	35.06	842.74
08/28/93	35.16	842.64
09/25/93	35.19	842.61
10/17/93	35.23	842.57
11/11/93	35.23	842.57
04/16/94	35.22	842.58
05/15/94	35.20	842.60
06/11/94	35.26	842.54
07/23/94	35.27	842.53
07/27/94	35.32	842.48
08/20/94	35.38	842.42
09/24/94	35.24	842.56
10/28/94	36.41	841.39
11/26/94	36.33	841.47
04/29/95	36.40	841.40
05/28/95	36.45	841.35
07/01/95	36.78	841.02
08/05/95	36.60	841.20
09/09/95	36.60	841.20
10/27/95	36.64	841.16
11/21/95	36.57	841.23
06/04/96	36.62	841.18
06/30/96	36.70	841.10
07/28/96	36.89	840.91
08/24/96	37.05	840.75
10/05/96	37.02	840.78
11/02/96	36.95	840.85

142-051-30BBB MP Elev (msl,ft)=966
Undefined Aquifer SI (ft.)=207-212

Date	Depth to Water (ft)	WL Elev (msl. ft)	Date	Depth to Water (ft)	WL Elev (msl. ft)	Date	Depth to Water (ft)	WL Elev (msl. ft)	Date	Depth to Water (ft)	WL Elev (msl. ft)
11/4/75	12.00	954.00									

142-051-34BAAB MP Elev (msl,ft)=947
Hillsboro Aquifer SI (ft.)=91-96

Date	Depth to Water (ft)	WL Elev (msl. ft)	Date	Depth to Water (ft)	WL Elev (msl. ft)	Date	Depth to Water (ft)	WL Elev (msl. ft)	Date	Depth to Water (ft)	WL Elev (msl. ft)
5/16/79	15.00	932.00									

143-050-17BBB2 MP Elev (msl,ft)=918
Hillsboro Aquifer SI (ft.)=60-80

Date	Depth to Water (ft)	WL Elev (msl. ft)	Date	Depth to Water (ft)	WL Elev (msl. ft)	Date	Depth to Water (ft)	WL Elev (msl. ft)	Date	Depth to Water (ft)	WL Elev (msl. ft)
6/1/89	26.00	892.00									

TABLE 3. TABLE OF CHEMICAL ANALYSES

Location	Screened Interval (ft)	Date Sampled	SiO_2	Fe	Mn	Ca	Mg	Na	K	HCO_3	CO_3	SO_4	Cl	F	NO_3	B	TDS	Hardness as $CaCO_3$	Hardness as NCH	% Na	SAR	Spec Cond (µmho)	Temp (°C)	pH
			(milligrams per liter)																					
135-048-17CCC	152-157	07/09/96		0.23	0.05	21	11	490	7	539	0	250	360	1.2	12		1420	98	0	91	22	1930	9.5	
135-048-17CCC	152-157	08/03/92	29	0.16	0.04	21	11	500	8	527	0	260	360	1.1	11	1.8	1460	98	0	91	22	2410	9.5	
135-048-17CCC	152-157	07/09/86	27	0.22	0.04	21	10	480	8	524	0	260	350	1	0.8	1.1	1420	94	0	91	22	2550	9	
135-048-19DDD	0-75	07/23/64	25	2.7		109	104	95	11	720	0	305	8	0.5	8.4	0.65	1020	700	110	22	1.6		8.9	
135-048-20BAA	0-172	02/09/71	28	1.1	0.29	123	33	150	7.1	370	0	381	53	0.8	0.7	0.38	960	445	142	42	3.1			
135-049-15ABB	0-386	07/23/64	23	5.1		106	27	325	18	364	0	464	230	0.4	2	2.1	1380	375	77	64	7.3		9.4	
135-049-30CDD	0-100	07/23/64	23	1.3		118	35	538	19	295	0	895	325	0.6	3	1.3	2100	440	198	72	11			
135-050-15DDC	238-243	09/16/93	21	0.7	0.11	44	15	370	11	323	0	430	240	0.8	6.6	1.3	1300	170	0	81	12	1845	10	
136-048-30BBB	178-183	07/09/92	26	1.7	0.14	200	70	330	13	424	0	1000	76	0.3	10	0.79	1940	790	440	47	5.1		8.8	
136-048-30BBB	178-183	09/21/88	24	1.7	0.15	210	70	330	12	401	0	1100	74	0.3	0.2	0.64	2020	810	480	46	5	2720	8	
136-048-30BBB	178-183	08/03/83	30	1.2	0.22	200	70	310	14	403	0	1100	78	0.3	1	0.61	2000	790	460	46	4.8	3100	12	
136-048-31AAA	0-72	07/31/64	23	8.3		456	124	177	17	495	0	1550	32	0.3	1.5	0.65	2630	1650	1250	19	1.9		7.8	
136-048-31DDD	325-330	09/27/95		0.03	0.13	55	17	280	13	331	4	270	200	0.5	1		1000	210	0	73	8.4	1454	10.1	
136-048-31DDD	325-330	11/15/91	28	0.03	0.1	55	17	270	12	303	0	280	210	0.6	5.5	1.4	1030	210	0	73	8.1	1587	7	
136-049-02ABB	138-143	07/09/92	26	0.25	0.15	84	25	87	5.8	347	0	180	35	0.3	5.4	0.26	620	310	28	37	2.1			
136-049-02ABB	138-143	08/27/87	27	2.2	0.25	90	26	83	6.7	317		170	30	0.4	5.2	0.21	597	330	72	35	2	690	9	
136-049-03CCD	198-203	07/09/92	23	2.3	0.34	200	54	180	9.6	450	0	590	120	0.3	7.1	0.54	1410	720	350	35	2.9			
136-049-03CCD	198-203	09/15/88	23	2.1	0.36	200	55	180	10	449	0	590	120	0.2	6.9	0.57	1410	730	360	35	2.9	2050	8	
136-049-03CCD	198-203	07/29/83	29	2.3	0.39	180	48	180	9.9	447	0	610	110	0.3	1	0.38	1390	650	280	37	3.1	2350	10	
136-049-06BAB	0-78.4	07/31/64	23	1.8		197	69	321	28	376	0	765	290	0.5	0	1.2	1880	775	467	46	5		10	
136-049-19CCA	0-170	07/31/64	22	0.38		111	32	306	16	267	0	438	293	0.7	3	1.4	1350	410	191	61	6.6		8.9	
136-049-24CCC1	178-181	09/27/95		0.4	0.14	100	39	140	8.1	399	0	350	53	0.3	1		889	410	83	42	3	1203	8.8	
136-049-24CCC1	178-181	10/27/93	24	2.6	0.31	190	58	130	8.6	401	0	590	74	0.1	8.2	0.57	1280	710	380	28	2.1	1622	7	
136-049-24CCC1	178-181	09/21/88	23	4	0.29	190	56	140	8	332	0	590	68	0.1	7.9	0.57	1250	710	430	30	2.3	1800	8	
136-049-24CCC1	178-181	08/03/83	25	3.4	0.42	140	40	160	7.4	469	0	430	52	0.2	1	0.39	1090	510	130	40	3.1	1850	12	
136-049-26BAA	93-98	07/09/92	26	0.34	0.12	88	34	130	7.2	378	0	300	56	0.4	6.2	0.46	835	360	50	43	3			
136-049-26BAA	93-98	09/21/88	28	0.29	0.13	86	33	130	7.4	305	0	270	64	0.4	5.9	0.54	776	350	100	44	3	1230	8	
136-049-26BAA	93-98	08/03/83	25	0.02	0.18	79	30	160	8.5	350	0	270	58	0.4	0.2	0.37	804	320	34	51	3.9	1480	12	
136-050-10BBC	0-150	07/31/64	25	0.15		48	38	367	12	332	0	433	260	0.4	5	0.7	1350	276	4	73	9.6		8.3	
136-050-35CCB	207-217	07/02/87	30	0.06	0.09	77	21	220	11	288	0	280	170	0.5	5	1.1	958	280	43	62	5.7	1500	15	
137-049-02ADB	0-190	11/18/64	22	0.37		35	9.4	132	5.3	344	0	58	56	0.5	0	0.35	488	126	0	68	5.1	525	8.9	
137-049-06BCB	0-150	09/01/94	31	1.3	0.48	80	20	8	5.7	373	0	14	0.2	0.2	0.9	0.06	346	280	0	6	0.2	584	9	
137-049-06BCB	0-150	06/24/64	22	0.17		146	38	320	16	309	0	550	290	0.4	3	0.95	1540	520	267	56	6.1		11.7	
137-049-06CCD	95-100	07/09/92	23	0.05	0.22	69	26	170	9.6	343	0	180	140	0.3	4.8	0.5	792	280	0	56	4.4			
137-049-06CCD	95-100	09/15/88	26	0.11	0.3	73	25	170	9.6	334	0	190	140	0.3	4.5	0.56	804	290	12	55	4.3	1360	8	
137-049-06CCD	95-100	06/25/80	29	0.03	0.46	86	26	170	6.9	367	0	210	140	0.3	1	0.48	851	320	19	53	4.1	1400	10	8
137-049-09DCD	0-75	11/18/64	22	0.07		78	35	152	10	376	0	130	173	0.2	1	0.15	786	338	30	48	3.6	950	9.4	
137-049-12AAA2	178-183	10/27/93	23	0.01	0.04	21	6	290	6.5	432	0	270	77	0.1	6.2	1.2	914	77	0	88	14	1355	9	
137-049-12CCC	190-195	05/13/93	21	0.16	0.12	57	17	94	5.2	341	0	100	45	0.3	1.2	0.29	509	210	0	48	2.8	793	11	
137-049-12CCC	190-195	11/16/91	26	0.03	0.04	57	20	95	5.4	334	0	110	45	0.4	3.3	0.29	527	220	0	47	2.8	811	6	
137-049-12CDD	0-98	05/13/65	23	0.12		64	17	144	8.6	334	0	139	100	0.4	1.8	0.25	663	228	0	57	4.1		8.9	
137-049-14BAA	178-183	09/27/95		0.57	0.36	140	48	130	8.1	437	0	430	49	0.2	1		1020	550	190	34	2.4	1324	8.6	
137-049-14BAA	178-183	11/14/91	25	0.03	0.06	140	46	130	8.2	453	0	420	49	0.2	0.9	0.36	1040	540	170	34	2.4	1398	7	
137-049-14BBB1	178-183	09/27/95		0.27	0.21	89	29	160	7.1	414	0	280	54	0.2	1		825	340	2	50	3.8	1118	8.5	
137-049-14BBB1	178-183	11/14/91	26	0.06	0.15	88	29	160	6.7	411	0	290	54	0.3	4.8	0.37	861	340	2	50	3.8	1235	7	
137-049-15BAA	198-203	07/09/92	26	0.19	0.05	38	12	110	4.4	390	0	24	50	0.5	5.3	0.28	463	140	0	61	4			
137-049-15BAA	198-203	09/15/88	27	0.2	0.06	38	12	110	5.1	378	0	20	54	0.4	5	0.34	458	140	0	61	4	800	8	
137-049-15BAA	198-203	10/27/82	28	0.18	0.06	40	10	110	6.3	375	0	21	49	0.5	0	0.29	450	140	0	62	4	750	7	
137-049-17DAA1	0-102	11/18/64	23	0.48		85	24	142	8	382	0	132	139	0.2	1	0.32	743	310	0	49	3.5	720	5.6	
137-049-18BBB	128-132	07/09/92	23	0.19	0.25	140	48	400	11	330	0	530	430	0.3	9.2	0.83	1760	550	280	61	7.4			
137-049-18BBB	128-132	09/15/88	25	0.18	0.28	140	48	420	11	339	0	530	430	0.3	8.2	0.96	1780	550	270	62	7.8	3060	8	
137-049-18BBB	128-132	06/25/80	25	0.35	0.45	150	50	410	9.2	339	0	570	430	0.3	1	0.65	1810	580	300	60	7.4	3050	9	7.5
137-049-18BBD	0-105	06/17/64	21	0.26		156	47	285	10	295	0	480	331	0.6	3	0.85	1478	585	344	51	5.7		13.3	
137-049-19BBB	0-83	11/18/64	20	2.9		191	46	400	13	295	0	624	476	0.2	1	0.65	1920	665	423	56	6.8	1650	7.2	
137-049-20DAA	250-255	07/09/92	23	0.47	0.13	150	40	390	7.5	280	0	530	430	0.4	7.3	0.55	1720	540	310	61	7.3		8.2	
137-049-20DAA	250-255	09/15/88	25	1.1	0.15	150	39	390	8.2	295	0	540	440	0.4	6.9	0.65	1750	540	290	61	7.3	2950	8	
137-049-20DAA	250-255	06/11/81	26	1.7	0.19	160	34	440	12	290	0	580	480	0.4	1	0.64	1880	540	300	63	8.2	2850	8	7.6
137-049-20DAA	250-255	06/27/80	28	0.63	0.2	160	39	430	6.3	281	0	580	480	0.4	1	0.51	1860	560	330	62	7.9	2900	9	7.8
137-049-23BAA	198-203	09/27/95		0.6	0.37	150	43	98	8	442	0	360	45	0.1	1		924	550	190	28	1.8	1163	8.3	
137-049-23BAA	198-203	11/14/91	26	0.03	0.05	140	40	96	7.7	435	0	340	42	0.2	0	0.31	906	510	160	29	1.9	1315	6	

Location	Screened Interval (ft)	Date Sampled	(milligrams per liter) SiO_2	Fe	Mn	Ca	Mg	Na	K	HCO_3	CO_3	SO_4	Cl	F	NO_3	B	TDS	Hardness as $CaCO_3$	NCH	% Na	SAR	Spec Cond (µmho)	Temp (°C)	pH
137-049-23BBB2	135-140	09/27/95		0.3	0.11	51	18	110	5.6	347	0	90	59	0.3	1		506	200	0	54	3.4	765	8	
137-049-23BBB2	135-140	11/14/91	21	0.02	0.01	51	18	100	5.8	340	0	91	56	0.4	4.1	0.31	515	200	0	51	3.1	850	7	
137-049-23DDD	238-243	09/27/95		1.4	0.17	150	53	110	7.6	462	0	410	46	0.2	1		1010	590	210	28	2	1247	8.4	
137-049-23DDD	238-243	11/14/91	24	0.03	0.02	150	50	110	7.5	456	0	410	46	0.3	0	0.35	1020	580	210	29	2	1421	7	
137-049-24BDA	0-107	00/00/64	24	0.13		56	19	97	7.3	305	0	129	45	0.3	0	0	528	219	0	48	2.9	575	13.3	
137-049-25CCC	228-238	07/09/92	26	2.2	0.2	200	59	140	8.4	431	0	600	61	0.2	6.4	0.39	1320	740	390	29	2.2		8.5	
137-049-25CCC	228-238	09/15/88	26	1.8	0.21	200	59	140	9.2	424	0	630	66	0.1	5.4	0.44	1350	740	390	29	2.2	1990	8	
137-049-25CCC	228-238	06/25/80	30	0.64	0.23	190	60	150	6.1	422	0	610	63	0.2	1	0.51	1320	720	370	31	2.4	1900	9	7.5
137-049-25CCC	228-238	07/19/73	26	3.2	0.25	180	68	140	7.4	427	0	590	58	0.2	1	0.26	1280	730	380	29	2.3		8	
137-049-25CCC	228-238	08/21/64	25	0.4		147	81	131	8.2	393	0	583	48	0.4	2	0	1220	700	378	29	2.1			
137-049-27BBC	249-300	09/04/86	1.6	0.02	0.07	42	25	140	5.8	331	1	72	120	0.2	7.2	0.46	578	210	0	59	4.2	1050	8.5	8.1
137-049-27BBC	249-300	07/25/83	1.4	0.06	0.19	63	25	140	7.3	350	0	93	120	0.3	1	0.32	624	260	0	53	3.8	1100	7	
137-049-27BBC	249-300	07/21/81	4.1	0.45	0.38	67	27	150	7.7	430	0	100	110	0.3	1	0	680	280	0	53	3.9	1110	9	
137-049-27BBC	249-300	10/25/90	27	0.03	0.09	80	30	150	5.7	418	0	160	110	0.3	8.1	0.4	778	320	0	50	3.6	1271	8.0	
137-049-28CDD	0-190	11/18/64	23	0.44		55	15	167	4.8	442	0	46	113	0.6	0	0	643	200	0	64	5.1	645	7.2	
137-049-30AAA	158-178	10/27/93	27	1.5	0.82	130	39	210	15	273	0	480	200	0.2	8.4	0.45	1250	490	260	48	4.1	1686	9	
137-049-30AAA	158-178	09/15/88	32	1.7	0.75	150	40	300	18	287	0	550	290	0.2	17	0.6	1540	540	300	54	5.6	2490	8	
137-049-30AAA	158-178	06/27/80	24	0.27	1.2	140	39	270	15	264	0	530	250	0.1	0.2	0.48	1400	510	290	53	5.2	2200	9	7.7
137-049-30AAA	158-178	07/17/78	19	0.73	1.4	120	32	210	11	198	0	410	210	0.1	9.3	0.16	1120	430	270	51	4.4	1900	8	
137-050-08CAA	0-142	11/17/64	20	0.26		60	14	82	6.3	333	0	22	76	0.4	0	0.35	445	208	0	45	2.5	500	8.9	
137-050-19DDC	0-246	06/17/64	22	0.36		86	39	742	18	337	0	612	838	0.6	30	1.5	2480		99	80	17		10.6	
137-050-26DAA	0-108	11/18/64	20	0.13		112	38	396	12	305	0	595	316	0.3	1	1	1640	435	185	66	8.2	1800	16.7	
137-050-30CAD	0-183	11/17/64	23	1.3		63	23	656	12	371	0	504	625	0.4	1	2.3	2090	250	0	84	18	1900	8.3	
137-051-06CBB	0-107	11/17/64	22	0.29		92	21	181	14	506	0	227	51	0.2	0	0.9	854	314	0	54	4.4	825	7.8	
137-051-21BCC	0-167	06/25/64	23	0.36		120	52	358	16	336	0	606	300	0.6	2	1	1640	515	240	59	6.9		11.1	
137-051-28CDC	0-84	06/24/64	24	0.4		120	26	133	14	578	0	196	21	0.4	11	1	830	405	0	40	2.9		11.1	
137-051-35CDD2	0-207	11/17/64	26	1.8		43	18	635	10	569	0	441	476	0.4	1	2	1930	180	0	88	21	1700	7.8	
138-048-07CDD	0-153	11/13/64	21	0.9		43	14	158	6.2	342	0	159	55	0.4	0	0.35	633	164	0	67	5.4	850	22.2	
138-048-07DC	135-145	04/11/88		0.045	0.011	42.5	12.9	149	8	339	0	154	63.4	0.4	0			159		66.9	5.13			
138-049-04AAA	148-151	06/06/64	21	0.27		44	10	80	5.2	283	0	22	50	0.4	6.4	0	377	153	0	52	2.8			
138-049-04CCC	178-181	07/09/92	23	0.03	0.06	18	6	140	5.3	327	0	72	45	0.7	5.7	0.67	477	70	0	80	7.3		8.6	
138-049-04CCC	178-181	09/02/88	30	0.03	0.06	17	6	150	4.9	330	5	68	41	0.8	5.4	0.77	492	67	0	82	8	785	9	
138-049-04CCC	178-181	06/09/81	29	0.08	0.04	17	5.5	150	6.5	344	0	71	43	0.7	1	0.64	493	65	0	82	8.1	760	7.5	8
138-049-04CCC	178-181	06/17/80	31	0.02	0.05	17	8.9	150	3.1	340	0	73	45	0.8	1	0.89	498	79	0	80	7.3	640	10	8.1
138-049-04DDD	150-153	09/26/91	20	0.16	0.19	37	12	78	4.9	260	0	40	48	0.3	3.8	0.3	373	140	0	53	2.9	655	8	
138-049-04DDD	150-153	08/26/87	26	0.15	0.14	39	12	76	4.8	282	0	38	49	0.5	3	0.17	388	150	0	52	2.7	630	9	
138-049-04DDD	150-153	06/17/80	30	0.09	0.12	41	12	80	2.7	267	0	37	51	0.4	1	0.17	387	150	0	53	2.8	640	10	8.1
138-049-05BBA	258-263	05/25/94	32	0.02	0.12	80	26	200	6.9	287	0	180	260	0.4	1.6	0.41	928	310	72	58	4.9	1421	8	
138-049-05BBA	258-263	11/14/90	32	0.02	0.08	81	25	210	6.2	293	0	190	250	0.4	1	0.54	940	310	65	59	5.2	1559	10	
138-049-06ABB4	248-253	06/01/94	24	0.02	0.1	110	41	330	9.7	304	0	350	420	0.6	8.1	0.65	1440	440	190	61	6.8	2180	9	
138-049-06ABB4	248-253	11/14/90	28	0.03	0.09	120	43	350	8.8	320	0	350	420	0.6	1	0.72	1480	480	210	61	6.9	2490	9	
138-049-06BBC	258-263	05/26/94	31	0.02	0.07	68	24	350	6.8	323	0	260	380	0.8	3	0.83	1280	270	4	73	9.3	1902	8	
138-049-06BBC	258-263	11/15/90	28	0.07	0.05	72	25	350	6.1	324	0	280	370	0.8	1	0.73	1290	280	17	72	9.1	2180	7	
138-049-07BAB	278-283	10/27/82	27	0.37	0.09	75	20	300	9	353	0	270	270	0.5	0.6	0.55	1150	270	0	70	8	1800	8	
138-049-07BBA	183-188	10/27/82	28	0.06	0.09	95	30	210	7.9	287	0	200	260	0.4	1	0.42	974	360	130	55	4.8	1650	7	
138-049-09DDD	319-322	09/28/95		0.28	0.12	49	16	130	6.8	284	0	100	100	0.5	1		544	190	0	59	4.1	874	8.7	
138-049-09DDD	319-322	09/26/91	25	0.03	0.06	45	16	130	5.3	278	0	100	110	0.5	4.9	0.35	574	180	0	60	4.2	954	8	
138-049-09DDD	319-322	08/27/87	27	0.59	0.14	52	14	130	10	287	0	100	110	0.5	3.7	0.24	589	190	0	59	4.1	220	10	
138-049-09DDD	319-322	05/13/87	29	0.24	0.24	66	17	42	10	270	0	49	46	0.3	1	0.15	394	230	13	27	1.2			
138-049-09DDD	319-322	06/08/81	28	0.56	0.05	46	18	140	7.6	291	0	110	110	0.5	1	0.16	605	190	0	60	4.4	990	8.5	7.7
138-049-09DDD	319-322	06/17/80	30	0.23	0.05	46	18	140	3.6	290	0	110	110	0.5	1	0.03	602	190	0	61	4.4	1100	10	7.9
138-049-12AAB	0-320	11/13/64	6.4	0.4		26	9	1250	14	322	0	1360	852	3.4	1.5	2.8	3690	102	0	96	54		10	
138-049-13AAA	0-132	11/13/64	20	0.21		52	12	148	6.1	337	0	171	46	0.4	0	0.48	623	178	0	63	4.8		7.8	
138-049-15BAB	0-179	06/25/64	22	0.2		33	12	66	5.5	222	0	46	37	0.5	0	0.4	331	132	0	51	2.5		10.6	
138-049-18BAA	248-253	10/27/93	26	0.07	0.13	74	23	210	6.7	299	0	220	230	0.4	6.2	0.46	944	280	34	61	5.5	1468	8	
138-049-18BAA	248-253	09/14/88	26	0.15	0.14	77	23	220	6.6	301	0	220	220	0.4	4.7	0.49	946	290	40	62	5.6	1740	8	
138-049-18BAA	248-253	10/26/82	27	0.04	0.13	80	25	230	8.5	285	0	240	240	0.4	1	0.39	992	300	69	61	5.8	1550	10	
138-049-18DCC	278-284	07/09/92	24	0.57	0.13	64	20	270	6.2	309	0	280	200	0.6	7.2	0.59	1030	240	0	70	7.6			
138-049-18DCC	278-284	09/20/88	26	0.45	0.13	64	21	270	6.5	297	0	300	210	0.6	6.4	0.71	1050	250	3	70	7.4	1800	8	
138-049-18DCC	278-284	07/21/81	26	0.17	0.14	67	27	280	8.7	322	0	320	222	0.6	1	0.74	1110	280	16	68	7.3	1710	8.5	7.85

Location	Screened Interval (ft)	Date Sampled	(milligrams per liter) SiO_2	Fe	Mn	Ca	Mg	Na	K	HCO_3	CO_3	SO_4	Cl	F	NO_3	B	TDS	Hardness as $CaCO_3$	NCH	% Na	SAR	Spec Cond (µmho)	Temp (°C)	pH
138-049-19AAA	0-303	03/04/64	8.5	0.62		16	3.6	345	13	327	0	323	156	1.4	1	1.9	1030	55	0	91	20			
138-049-20BBB	0-110	11/13/64	24	0.53		76	30	135	7.9	356	0	162	105	0.4	1	0.2	718	312	21	48	3.3	760	10	
138-049-20CCC	150-155	06/15/94	27	0.88	0.49	75	22	22	4.4	384	0	12	0.3	0.2	1.9	0.09	355	280	0	15	0.6	541		
138-049-20CCC	150-155	07/09/92	27	0.13	0.05	62	25	180	6.2	295	0	160	170	0.4	7.6	0.35	784	260	16	60	4.9		8.6	
138-049-20CCC	150-155	09/15/88	28	0.12	0.05	61	25	180	6.9	293	0	170	170	0.4	7	0.42	793	260	15	60	4.9	1380	8	
138-049-20CCC	150-155	10/26/82	28	0.18	0.04	60	25	190	8.7	283	0	170	180	0.4	0.3	0.36	802	250	21	61	5.2	1320	9	
138-049-22BBA2	245-250	09/04/86	26	0.02	0.07	42	15	110	4.4	275	0	49	95	0.5	3.4	0.46	481	170	0	58	3.7			
138-049-22BBA2	245-250	10/26/90	30	0.16	0.05	40	14	110	4	276	0	45	94	0.6	4.5	0.35	479	160	0	60	3.8	783	9.0	
138-049-27BAA	0-240	11/13/64	17	0.46		34	11	126	5.2	373	0	22	58	0.5	0	0.48	459	131	0	67	4.8	490	9.4	
138-049-27BAB	188-193	09/28/95		0.15	0.04	34	12	140	5	330	0	81	75	0.6	1		512	130	0	68	5.3	832	7.9	
138-049-27BAB	188-193	09/26/91	26	0.03	0.04	34	12	140	4.9	327	0	77	74	0.5	1	0.41	531	130	0	68	5.3	872	8	
138-049-27BAB	188-193	08/26/87	27	1.2	0.11	46	16	140	6.1	322	0	73	75	0.7	5.9	0.31	550	180	0	62	4.5	875	8	
138-049-28DCC	0-90	11/13/64	19	0.31		53	23	156	8	390	0	114	105	0.4		0.55	671	226	0	59	4.5	680	7.8	
138-049-29CCC	258-278	06/25/80	28	0.02	0.12	110	38	280	5.6	295	0	350	330	0.4	1	0.14	1290	430	190	58	5.9	2250	12	8.1
138-049-29CCC	258-278	06/12/78	25	2.3	0.16	110	35	280	5.6	252	0	360	340	0.4	1	0.73	1280	420	210	59	5.9	2100	9	
138-049-29CCC	258-278	07/19/73	24	0.83	0.2	110	38	280	6.1	282	0	360	310	0.5	2	0.39	1270	430	200	58	5.9		8	
138-049-29CCC	258-278	08/20/64	24	0.24		108	41	273	8	281	0	358	315	0.5	3	0	1270	440	210	57	5.6			
138-049-31BAB	0-243	11/13/64	3.5	0.56		17	8.5	610	10	329	0	576	383	1.4	2	2.8	1780	77	0	94	30	1700	10	
138-049-31DDD	270-275	07/09/92	25	0.55	0.16	99	29	250	6.5	315	0	290	280	0.5	6.6	0.43	1140	370	110	59	5.7		8.8	
138-049-31DDD	270-275	09/15/88	26	0.55	0.16	100	30	250	7	322	0	280	280	0.6	6.1	0.47	1140	370	110	59	5.7	2010	8	
138-049-31DDD	270-275	10/26/82	26	0.51	0.21	100	30	260	9.1	301	0	270	280	0.5	2	0.36	1130	370	130	60	5.9	1800	9	
138-049-33CCC	157-162	05/13/93	20	0.13	0.02	15	7	350	4.7	717	0	15	180	1	9.3	0.89	956	67	0	91	19	1585	14	
138-049-34CCC	81-101	06/11/64	23	0.47		38	14	123	6.4	349	0	39	70	0.6	4.4	0.3	490		0	63	4.3			
138-049-35BBB	170-180	09/28/95		0.03	0.07	34	13	120	4.4	335	0	54	59	0.5	1		451	140	0	64	4.4	829	7.9	
138-049-35BBB	170-180	11/14/91	21	0.05	0.09	40	18	130	4.9	338	0	100	61	0.6	4.5	0.4	548	170	0	61	4.3	891	7	
138-050-05ADD	0-455	03/04/64	5.5	0.64		16	4.9	830	18	383	0	756	557	6.2	1	3.9	2380	60	0	96	46			
138-050-05BBB	221-241	07/14/64	22	0.28		44	16	263	10	634	0	33	163	0.5	142	0.85	1000	176	0	75	8.6			
138-050-13BCB	0-123	11/13/64	23	2.3		80	21	264	8.8	349	0	252	231	0.2	1	0.85	1060	285	0	66	6.8	1100	10	
138-050-14DDD	155-158	07/08/92	26	0.98	0.14	73	31	260	8.4	340	0	270	250	0.3	12	0.56	1100	310	31	64	6.4			
138-050-14DDD	155-158	09/14/88	26	0.75	0.14	75	31	270	8.7	349	0	280	250	0.3	11	0.6	1130	310	29	64	6.7	1930	8	
138-050-14DDD	155-158	07/21/81	29	0.31	0.15	76	34	280	11	358	0	300	260	0.3	1	0.69	1170	330	36	64	6.7	1725	8	7.9
138-050-20CDD	0-180	11/13/64	12	0.24		80	20	246	7.2	387	0	64	310	0.3		0	931	280	0	65	6.4	1100	9.4	
138-050-35AAA	88-98	07/31/64	20	0.24		104	42	240	18	332	0	302	288	0.5	0	0	1180	432	160	53	5			
138-051-04BBB	0-380	06/25/64	5	0.52		26	9.2	1320	64	232	17	1440	928	4.5	53	4.3	3980	103	0	94	56		12.8	
138-051-09CCD	0-80	11/18/64	22	0.04		94	30	250	14	366	0	384	158	0.3	1	0.8	1130	358	58	59	5.8	1150	8.9	
138-051-24CCB	0-80	11/18/64	21	0.2		117	41	171	14	409	0	278	162	0.2	1	0.6	1010	462	127	44	3.5	1150	10	
138-051-32CBB	0-69	11/18/64	23	0.12		103	37	180	15	407	0	418	42	0.2	0	0.65	1020	410	77	48	3.9	990	6.7	
139-047-05CDDCDC	68-105	12/22/46	18	1		81	36	16		351	0	80	11					366						
139-048-04DCC2	223-263	05/25/51	28	0.63	0	55	13	155	5	329	0	144	74	0.2	3.8			189						
139-048-04DCC3	233-273	07/25/46		0.4	0.05							230	81	0				190						
139-048-04DCC3	233-273	09/04/41	28	2.51		56	17	146	5.8	316	0	148	84	0.4	2.8			210						
139-048-04DCC3	233-273	09/19/46	22	1		55	22			331		140	84					227						
139-048-05DDD2	166-218	09/19/46	26	0.7		61	24			326		184	81					252						
139-049-01CBD1	0-183	01/01/46	26	0.43		45	15			324		161	132	0.6	3			178						
139-049-01CCA	184-190	07/08/92	21	0.02	0.02	49	18	210	7.1	348	0	130	180	0.3	5.9	0.6	793	200	0	69	6.4		10.5	
139-049-01CCA	184-190	09/01/88	19	0.09	0.01	45	17	190	6.2	345	0	110	170	0.4	1	0.52	729	180	0	68	6.2	1380	10	
139-049-01CCA	184-190	06/16/83	28	0.03	0.03	46	18	200	7.4	359	0	110	150	0.4	1	0.48	737	190	0	69	6.3	1280	11	
139-049-01CCA	184-190	08/14/81	24	0.03	0.03	44	15	200	7.1	381	0	88	160	0.3	1	0.74	728	170	0	71	6.7	1200		8.2
139-049-01CDB	0-192	11/28/90	28	0.66	0.04	49	20	200	5.8	359	0	150	140	0.4	1	0.7	773	210	0	67	6	1272	9	
139-049-02CCD	0-25	05/13/65	22	0.26		35	15	255	6.6	337	0	168	178	0.5	5.7	1.3	854	150	0	78	9.1		6.7	
139-049-02CCD3	346-356	09/01/82	25	0.64	0.08	30	12	250	7.3	337	0	140	160	0.7	3.5	0.55	796	120	0	80	9.9	1340	11	
139-049-02CCD4	237-242	05/31/94	25	0.2	0.11	54	18	130	6.1	362	0	18	130	0.4	3.6	0.35	564	210	0	57	3.9	1009	9	
139-049-02CCD4	237-242	11/27/90	33	0.03	0.05	55	18	140	5.7	369	0	43	120	0.5	1	0.37	599	210	0	58	4.2	1061	7	
139-049-03BBB	175-180	07/08/92	24	0.07	0.07	60	19	210	7.3	339	0	150	190	0.3	6.3	0.5	835	230	0	66	6		9	
139-049-03BBB	175-180	09/01/88	21	0.27	0.06	63	20	200	6.8	335	0	150	190	0.4	1	0.43	818	240		64	5.6	1460	10	
139-049-03BBB	175-180	10/28/82	23	0.27	0.14	65	20	210	9.7	331	0	130	200	0.4	1	0.44	820	240	0	64	5.9	1400	7	
139-049-03BCC2	169-174	10/28/82	23	0.04	0.1	45	20	190	8.9	315	0	110	160	0.4	0.2	0.49	713	200	0	67	5.8	1180	7	
139-049-03BCC3	168-173	10/27/93	21	0.05	0.33	46	19	180	7.5	319	0	130	150	0.4	4.2	0.5	716	190	0	66	5.7	1132	8	
139-049-04AAA1	10-20	08/04/94	25	0.43	4.1	350	520	1300	12	609	0	4500	470	0.4	1.2	0.33	7480	3000	2500	48	10	10200	11	
139-049-04AAA2	10-20	08/09/94	24	0.16	0.08	430	1300	2500	14	778	0	10000	700	0.4	1.4	0.33	15400	6400	5800	46	14	20800	12	

Location	Screened Interval (ft)	Date Sampled	(milligrams per liter) SiO_2	Fe	Mn	Ca	Mg	Na	K	HCO_3	CO_3	SO_4	Cl	F	NO_3	B	TDS	Hardness as $CaCO_3$	Hardness as NCH	% Na	SAR	Spec Cond (µmho)	Temp (°C)	pH
139-049-04AAB1	10-20	08/04/94	24	0.25	5.5	450	630	1500	13	732	0	6100	130	0.3	2.6	0.26	9220	3700	3100	47	11	11470	11	
139-049-04AAB2	9-19	08/04/94	23	0.11	0.17	420	1000	2000	12	735	0	8400	96	0.2	2.2	0.19	12300	5200	4600	46	12	15100	11	
139-049-04AAD1	30-35	08/04/94	42	0.03	0.07	190	96	200	8.1	779	0	510	130	0.1	3.3	0.48	1560	870	230	33	2.9	2760	11	
139-049-04AAD2	10-20	08/04/94	24	0.09	0.03	150	110	290	5	747	0	680	98	0.5	7.6	0.25	1730	830	220	43	4.4	2880	11	
139-049-04ABB	9-19	08/04/94	24	0.03	0.06	140	72	68	3.6	482	0	480	20	0.6	0.5	0.18	1050	650	250	19	1.2	2400	13	
139-049-04ABB1	0-0	08/04/94	24	0.03	0.06	140	72	68	3.6	482	0	480	20	0.6	0.5	0.18	1050	650	250	19	1.2	2400	13	
139-049-04ABB2	9-19	08/04/94	24	0.06	0.04	270	150	100	4.8	473	0	1000	26	0.4	0.7	0.22	1810	1300	900	14	1.2	3240	11	
139-049-04ACCD1	8-18	08/04/94	26	0.06	0.02	370	250	130	3.2	585	0	1100	380	0.5	4.6	0.29	2550	2000	1500	13	1.3	4410	11	
139-049-04ACCD2	8-18	08/04/94	23	0.09	0.03	350	150	240	2	479	0	1100	330	0.4	5.2	0.26	2440	1500	1100	26	2.7	4260	11	
139-049-04ACD1	10-20	08/04/94	27	0.09	0.53	390	600	1000	11	657	0	4700	250	0.3	28	0.31	7330	3400	2900	39	7.5	8510	11	
139-049-04ACD2	10-20	08/05/94	24	0.06	0.82	390	390	500	8	623	0	2900	160	0.4	4.6	0.31	4690	2600	2100	30	4.3	5710	11	
139-049-06ACA	0-240	01/01/46	26	0.39		57	21			412		90	355	0.6	5.2			228						
139-049-06ACA	0-240	06/07/79	26	0.41	0.08	56	20	280	5.8	379	0	130	270	0.6	1	0.23	977	220	0	73	8.2	1625	9.5	
139-049-06ACC	0-208	10/23/96		0.71	0.06	63	22	260	6.6	411	0	130	280	0.5	3.7		969	250	0	69	7.2	1265	7.9	
139-049-06ACC	0-208	09/26/95		0.89	0.04	58	21	280	7.7	394	0	140	280	0.4	1		983	230	0	72	8	1557	8.5	
139-049-06ACC	0-208	06/02/94	27	0.74	0.06	59	22	270	6.8	386	0	130	290	0.5	6.1	0.72	1000	240	0	70	7.6	1593	9	
139-049-06ACC	0-208	05/12/93	25	0.6	0.06	61	21	270	6.3	382	0	130	280	0.4	6.6	0.65	990	240	0	70	7.6	1846	8	
139-049-06ACC	0-208	09/01/92	24	0.4	0.05	62	23	260	7.1	392	0	140	280	0.5	6.4	0.75	997	250	0	69	7.2	1641	10	
139-049-06ACC	0-208	06/20/90	25	0.55	0.06	60	20	270	5.7	378	0	130	280	0.5	5.9	0.63	984	230	0	71	7.7	1733	9	
139-049-06ACC	0-208	06/20/89	27	0.46	0.04	60	21	260	7.8	376	0	120	280	0.4	1.8	0.81	964	240	0	70	7.3	2040	9	
139-049-06ACC	0-208	06/15/88	28	0.44	0.05	61	22	270	8	377	0	140	290	0.6	0.5	0.85	1010	240	0	70	7.6			
139-049-06ACC	0-208	06/25/86	28	0.26	0.05	61	21	280	8.4	368	0	140	280	0.5	0.4	0.74	1000	240	0	71	7.9	2000	9	
139-049-06ACC	0-208	06/19/85	27	0.39	0.06	61	22	270	6.7	369	0	130	290	0.5	1.1	0.59	991	240	0	70	7.6			
139-049-06ACC	0-208	06/21/84	28	0.3	0.06	62	21	270	9.1	358	0	140	300	0.6	1	0.86	1010	240	0	70	7.6	1680	12	
139-049-06ACC	0-208	06/16/83	27	0.4	0.06	57	21	290	8.3	353	0	130	300	0.5	7.2	0.49	1020	230	0	73	8.3	1750	12	
139-049-06ACC	0-208	09/02/82	26	0.39	0.06	59	21	280	9.5	360	0	140	280	0.6	5.5	0.59	1000	230	62	71	8	1600	11	
139-049-06ACC	0-208	06/19/81	27	0.07	0.05	59	20	280	10	391	0	150	280	0.4	1	0.42	1020	230	0	71	8			
139-049-06ACC	0-208	06/24/80	28	0.4	0.07	56	20	280	5.4	389	0	120	270	0.4	2	0.43	975	220	0	73	8.2	1750	12	
139-049-06ACC	0-208	08/22/79	20	0.06	0.09	56	17	280	5.8	385	0	120	260	0.5	1	0.47	951	210	0	74	8.4	1640	17	
139-049-06ACC	0-208	06/23/78	19	0.38	0.06	56	24	260	5.6	361	0	140	270	0.6	1	1.1	956	240	0	70	7.3	1700	15	
139-049-06ACC	0-208	06/21/77	16	0.32	0.05	57	19	270	5.6	385	0	140	260	0.4	1	0.66	960	220	0	72	7.9	1800	13	
139-049-06ACC	0-208	06/23/76	29	0.58	0.06	54	16	270	5.7	364	0	150	260	0.5	2.1	0.79	968	200	0	74	8.3	1650		
139-049-06ACC	0-208	06/11/74	25	0.49	0.02	52	17	280	5.6	379	0	130	270	0.6	2	0.13	970	200	0	75	8.6			
139-049-06ACC	0-208	06/27/73	25	0.34	0.04	50	24	287	6.2	387	0	130	278	0.6	1	0.06	993	225	0	73	8.3	1770	10	
139-049-06ACC	0-208	06/14/72	15	0.31	0.05	52	20	286	6	372	0	135	295	0.6	0.7	0.75	995	213	0	74	8.5		8.9	
139-049-06ACC	0-208	05/11/71	26	0.46	0.04	54	18	286	6.2	378	0	128	279	0.9	0.4	0.62	986	209	0	74	8.6		8.9	
139-049-06ACC	0-208	06/16/70	26	0	0.06	57	16	293	5.8	370	0	134	281	0.7	3.8	0.52	1000	209	0	75	8.8		8.9	
139-049-06ACC	0-208	11/06/68	27	0.12	0.05	56	17	293	7.2	375	0	140	289	0.6	2.5	0.74	1020	210	0	74	8.8		8.9	
139-049-06ACC	0-208	04/16/68	27	0.38		62	12	297	7.3	374	0	134	290	0.6	5.6	0.93	1020	205	0	75	9			
139-049-06ACC	0-208	01/12/67				55	18			365	0	132	294		4.4			210	0	75	8.9			
139-049-06ACC	0-208	06/14/65	23	0.66		67	14	303	9.1	377	0	151	310	0.5	5.3	0.48	1070	224	0	74	8.8		8.9	
139-049-06ACC	0-208	06/03/87	35	0.38	0.05	62	22	270	7.1	368	0	130	290	0.5	0.6	0.87	1000	250	0	70	7.4	1825	10	7.48
139-049-06BDA	0-210	09/26/95		0.55	0.03	49	18	310	8.8	458	0	92	310	0.7	1		1010	200	0	76	9.5	1670	8.2	
139-049-06BDA	0-210	05/13/93	24	0.38	0.04	55	18	300	7.3	476	0	57	290	0.6	0	0.72	987	210	0	75	9	1647	9	
139-049-06BDA	0-210	09/01/92	26	0.43	0.04	59	21	290	7.6	499	0	86	310	0.6	8.3	0.85	1060	230	0	72	8.3	1812	10	
139-049-06BDA	0-210	07/13/88	21	0.34	0.04	49	17	300	8.1	459	0	78	280	0.6	4.9	0.65	986	190	0	76	9.5			
139-049-06BDA	0-210	06/03/87	35	0.38	0.04	54	18	310	7.4	447	0	84	320	0.7	0.6	1	1050	210	0	76	9.3	1910	10	7.7
139-049-06BDA	0-210	06/25/86	27	0.44	0.04	52	17	310	8.7	448	0	82	290	0.7	0.5	0.83	1010	200	0	76	9.5	1675	11	
139-049-06BDA	0-210	06/21/84	28	0.41	0.04	48	17	310	7.9	453	0	77	300	0.8	0.4	1	1010	190	0	77	9.8	1700	16	
139-049-06BDA	0-210	08/05/83	28	0.48	0.03	53	19	300	9.8	422	0	87	350	0.7	1	0.58	1060	210	0	75	9	2250	11	
139-049-06BDA	0-210	06/16/83	28	0.43	0.04	46	16	320	8.1	450	0	70	310	0.7	6.5	0.54	1030	180	0	78	10	1800	11	
139-049-06BDA	0-210	09/02/82	25	0.43	0.03	45	16	330	9.5	457	0	69	300	0.8	4.5	0.64	1030	180	0	79	11	1750	11	
139-049-06BDA	0-210	06/19/81	27	0.65	0.05	55	20	330	12	469	0	85	360	0.6	1	0.64	1120	220	0	75	9.7			
139-049-06BDA	0-210	06/24/80	24	0.41	0.05	47	15	330	5.6	484	0	53	330	0.8	1	0.53	1050	180	0	79	11	1940	9	
139-049-06BDA	0-210	06/23/78	21	0.63	0.1	55	20	330	6.5	431	0	83	360	0.8	2.5	1.2	1090	220	0	76	9.7	1900	13	
139-049-06BDA	0-210	06/22/77	16	0.4	0.04	43	18	310	5.5	473	0	66	300	0.5	1	0.8	994	180	0	78	10	1750	13	
139-049-06BDA	0-210	06/18/75	19	0.46	0.04	51	15	330	6.5	450	0	72	340	0.6	1	0.98	1060	190	0	78	10			
139-049-06BDA	0-210	06/11/74	25	0.67	0.04	52	17	330	6.3	445	7	65	360	0.8	1	0.17	1080	200	0	78	10			
139-049-06BDA	0-210	06/27/73	26	0.38	0.04	52	24	335	6.5	462	0	63	368	0.7	1	0.25	1100	228	0	75	9.6	2050		
139-049-06BDA	0-210	06/14/72	15	0.54	0.06	53	20	341	6.7	466	0	69	379	0.7	1	1	1120	214	0	77	10		7.8	

Location	Screened Interval (ft)	Date Sampled	(milligrams per liter) SiO_2	Fe	Mn	Ca	Mg	Na	K	HCO_3	CO_3	SO_4	Cl	F	NO_3	B	TDS	Hardness as $CaCO_3$	NCH	% Na	SAR	Spec Cond (µmho)	Temp (°C)	pH
139-049-06BDA	0-210	05/11/71	27	0.7	0.03	53	20	329	6.9	460	0	79	361	1	2	0.8	1110	215	0	76	9.8		7.8	
139-049-06BDA	0-210	06/16/70	36	0	0.04	74	5.2	412	6.5	543	21	66	386	0.6	2.5	0.41	1280	206	0	81	12		8.9	
139-049-06BDA	0-210	11/06/68	27	0.24	0.05	58	18	330	7.6	456	0	68	360	0.7	0	0.7	1100	220	0	76	9.7			
139-049-06BDA	0-210	04/16/68	27	0.02		62	13	333	7.6	456	0	58	363	0.7	0	1.1	1090	210	0	77	10			
139-049-06BDA	0-210	08/29/67	26	0.44		60	18	345	7.2	446	0	72	375	0.9	1.1	0.85	1130	223		76	10			
139-049-06BDA	0-210	01/12/67	28	0.15		55	18	348	8.2	453	0	54	366	0.7	0.6	1.1	1100	211	0	77	10			
139-049-06BDD	167-170	10/22/96		0.46	0.04	50	18	300	7.4	475	0	86	310	0.8	3.6		1010	200	0	76	9.2	1407	8.1	
139-049-06BDD	167-170	06/02/94	27	0.48	0.04	49	18	300	7.4	445	0	58	320	0.7	6.2	0.81	1010	200	0	76	9.2	1712	8	
139-049-06BDD	167-170	06/19/90	26	0.58	0.05	50	17	310	6.4	431	0	72	310	0.6	4.7	0.75	1010	200	0	77	9.5	1786	7	
139-049-06BDD	167-170	06/20/89	28	0.99	0.07	55	20	330	9.2	433	0	63	370	0.7	1.1	0.96	1090	220	0	76	9.7	2270	8	
139-049-06BDD	167-170	06/15/88	29	0.62	0.04	51	19	320	9.2	425	0	87	340	0.8	0.4	0.98	1070	210	0	76	9.6			
139-049-06BDD	167-170	06/19/85	28	0.59	0.04	53	19	320	7.5	448	0	81	320	0.7	1	0.47	1050	210	0	76	9.6		9	
139-049-06BDD	167-170	06/23/76	29	0.79	0.05	49	16	330	6.2	453	0	81	330	0.7	1	0.87	1070	190	0	78	10	1900		
139-049-06CDD	0-192	03/13/64	21	1.8		52	17	415	15	417	0	134	450	1	1	0.55	1310	200	0	80	13			
139-049-06DCD1	0-216	10/22/96		0.85	0.07	59	23	370	9.2	433	0	160	410	0.7	4.8		1250	240	0	76	10	1425	8.3	
139-049-06DCD1	0-216	09/26/95		0.88	0.05	54	21	370	10	427	0	160	370	0.6	1		1200	220	0	77	11	1956	8.1	
139-049-06DCD1	0-216	06/02/94	24	1.3	0.09	59	22	370	9.2	411	0	130	410	0.7	7.4	0.84	1260	240	0	76	10	2060	11	
139-049-06DCD1	0-216	09/03/92	28	0.04	0.03	49	17	300	8.3	399	0	160	280	1.7	0	0.76	1040	190	0	76	9.5	1749	10	
139-049-06DCD1	0-216	06/20/90	27	0.06	0.05	46	16	320	6.5	374	0	140	300	2.1	1	0.71	1040	180	0	79	10	1811	9	
139-049-06DCD1	0-216	06/20/89	28	0.02	0.03	44	18	330	8.8	378	0	110	320	1.3	1.8	0.92	1070	180	0	79	11	2010	9	
139-049-06DCD1	0-216	06/15/88	29	0.55	0.05	48	18	320	9.3	385	0	140	330	0.8	1	0.96	1090	190	0	77	10			
139-049-06DCD1	0-216	06/03/87	34	0.23	0.05	50	18	320	7.9	377		110	340	0.7	0.6	1	1090	200		77	9.8	1940	11	7.61
139-049-06DCD1	0-216	06/25/86	29	0.38	0.05	50	19	330	9.8	381	0	130	330	0.7	0.7	1.3	1090	200	0	77	10	1390	12	
139-049-06DCD1	0-216	06/19/85	27	0.04	0.06	50	19	320	7.7	391	0	130	350	0.6	5.4	0.65	1100	200	0	77	9.8		11	
139-049-06DCD1	0-216	06/21/84	28	0.06	0.06	53	19	330	10	378	0	130	360	0.7	0.6	0.96	1120	210	0	76	9.9	1802	13	
139-049-06DCD1	0-216	06/16/83	28	0.65	0.07	51	20	340	9.7	385	0	120	370	0.6	7.7	0.56	1140	210	0	77	10	2000	11	
139-049-06DCD1	0-216	09/02/82	26	0.07	0.07	51	19	340	11	391	0	130	350	0.7	1	0.66	1120	210	0	77	10	1850	11	
139-049-06DCD1	0-216	06/19/81	27	1	0.06	52	20	350	12	420	0	140	370	0.6	1	0.68	1180	210	0	77	11			
139-049-06DCD1	0-216	06/24/80	25	0.31	0.08	53	19	350	7	404	0	130	380	0.7	1	0.49	1170	210	0	78	11	2075	20	
139-049-06DCD1	0-216	06/23/78	20	2.3	0.06	47	18	350	8	361	0	140	390	0.7	1	1.1	1160	190	0	79	11	2000	18	
139-049-06DCD1	0-216	06/22/77	16	0.67	0.07	50	18	340	6.9	396	0	150	350	0.4	1	0.73	1130	200	0	78	10	1860	14	
139-049-06DCD1	0-216	07/08/76	31	1.1	0.04	51	18	343	6.8	370	0	150	370	0.7	0	0.83	1150	200	0	78	11	2100		
139-049-06DCD1	0-216	06/23/76	29	1	0.08	51	20	340	7	381	0	160	360	0.6	1	0.91	1160	210	0	77	10	2600		
139-049-06DCD1	0-216	06/11/74	26	0.8	0.02	49	19	340	6.7	376	0	160	360	0.7	2.5	0.09	1150	200	0	78	10			
139-049-06DCD1	0-216	06/27/73	26	0.6	0.06	47	24	359	6.7	380	0	168	367	0.7	1	0.16	1190	217	0	78	11	2110	7.5	
139-049-06DCD1	0-216	06/14/72	15	0.09	0.08	51	19	363	7.1	372	0	181	385	0.6	1	0.93	1210	204	0	79	11		8.9	
139-049-06DCD1	0-216	06/16/70	27	0	0.1	53	15	386	6.7	381	0	176	383	0.7	0.2	0.45	1240	195	0	80	12		9.4	
139-049-06DCD1	0-216	11/06/68	27	0.86	0.07	53	18	393	7.8	374	0	195	402	0.7	4.6	0.82	1290	207	0	80	12		9.4	
139-049-06DCD1	0-216	04/16/68	28	0.22		57	13	406	7.9	378	0	202	411	0.7	4	0.93	1320	197	0	81	13			
139-049-06DCD1	0-216	08/29/67	26	0.88		57	18	417	8	390	0	204	436	0.6	5.3	0.85	1370	215		80	12			
139-049-06DCD1	0-216	11/09/63	23	0.62		59	19	445	15	407	0	201	472	0.9	1	0.9	1430	220	0	80	13			
139-049-06DCD1	0-216	11/09/63	24	0.96		57	20	450	13	410	0	207	478	0.9	1	0.7	1450	224	0	80	13			
139-049-06DCD2	0-182	11/03/63	15	0.52		57	19	440	14	388	0	217	472	0.8	1	0.75	1430	220	0	80	13			
139-049-06DDC	0-182	11/04/63	18	0.4		57	19	372	13	346	0	179	410	0.9	1	1.1	1240	220	0	77	11			
139-049-07ABB2	0-204	06/21/84	34	2.2	0.08	40	16	160	6.6	291	0	98	100	9.6	0.2	0.55	610	170	0	67	5.3	988	12	
139-049-07ABB2	0-204	06/16/83	28	0.55	0.05	49	20	380	11	384	0	170	410	0.6	2.7	0.74	1260	210	0	79	11	2175	12	
139-049-07ABB2	0-204	09/02/82	25	0.76	0.06	53	20	380	12	383	0	160	380	0.8	0	0.75	1220	210	0	78	11	2000		
139-049-07ABB2	0-204	06/19/81	27	0.69	0.05	51	20	380	13	423	0	160	390	0.5	1	0.68	1250	210	0	78	11			
139-049-07ABB2	0-204	06/24/80	25	0.49	0.07	51	20	370	7.8	402	0	150	390	0.7	0.1	0.49	1210	210	0	79	11	2500	9	
139-049-07ABB2	0-204	06/07/79	29	0.73	0.12	53	21	370	7.8	394	0	160	400	0.7	1	0.03	1240	220	0	78	11			
139-049-07ABB2	0-204	06/23/78	20	0.67	0.06	52	17	370	9.6	374	0	160	400	0.7	1	1	1220	200	0	79	11	2450	14	
139-049-07ABB2	0-204	06/22/77	8.7	0.12	0.08	51	20	360	7.7	392	0	150	380	0.3	1.9	0.8	1170	210	0	78	11	2250		
139-049-07ABB2	0-204	06/23/76	29	1	0.07	49	21	360	7.8	391	0	170	380	0.6	0.3	0.94	1210	210	0	78	11	2900		
139-049-07ABB2	0-204	06/18/75	20	0.36	0.06	51	20	360	7.8	387	0	160	380	0.6	0.7	0.87	1190	210	0	78	11			
139-049-07ABB2	0-204	06/11/74	26	0.76	0.04	49	19	370	7.6	387	0	160	380	0.7	1	0.09	1210	200	0	79	11			
139-049-07ABB2	0-204	07/19/73	26	1.2	0.06	47	22	370	7.4	388	0	170	370	0.7	1	0.65	1200	210	0	79	11		8.9	
139-049-07ABB2	0-204	06/14/72	15	0.56	0.08	48	20	375	7.8	385	0	152	402	0.7	0.1	0.96	1210	204	0	79	11		8.3	
139-049-07ABB2	0-204	05/11/71	26	0.76	0.06	49	19	374	6.4	383	0	195	380	0.8	0.3	0.38	1240	202	0	79	11		8.9	
139-049-07ABB2	0-204	06/16/70	27	0.96	0.08	53	18	382	7.4	382	0	179	387	0.8	0	0.41	1240	205	0	79	12		8.9	
139-049-07ABB2	0-204	04/16/68	27	0.2		58	13	384	8.2	381	0	195	387	0.6	0	0.98	1260	200	0	80	12			

Location	Screened Interval (ft)	Date Sampled	SiO_2	Fe	Mn	Ca	Mg	Na	K	HCO_3	CO_3	SO_4	Cl	F	NO_3	B	TDS	Hardness as $CaCO_3$	NCH	% Na	SAR	Spec Cond (µmho)	Temp (°C)	pH
			(milligrams per liter)																					
139-049-07ABB2	0-204	08/29/67	26	0.13		60	17	404	8.1	378	0	201	412	0.6	3	0.85	1320	221		79	12			
139-049-07ABB2	0-204	01/12/67	28			53	21	399	8.5	382	0	196	416	0.7	1.1	0.94	1310	220	0	79	12			
139-049-07ABB2	0-204	06/18/65	20	0.44		45	12	287	9.1	366	0	168	238	0.6	2.4	1	970	162	0	78	9.8		6.1	
139-049-08BDA	0-155	06/16/83	29	0.3	0.07	50	20	200	8.4	379	0	170	120	0.6	4.5	0.49	790	210	0	67	6	1280	12	
139-049-08BDA	0-155	09/02/82	25	0.42	0.06	46	19	210	9.1	368	0	170	120	0.7	6.2	0.58	788	190	0	69	6.6	1240	11	
139-049-08BDA	0-155	06/24/80	25	0.12	0.08	42	21	180	5	346	0	160	110	0.7	0.1	0.56	715	190	0	67	5.7	1380	8	
139-049-08BDA	0-155	06/18/75	17	0.46	0.04	36	15	170	5.1	327	0	120	100	0.6	2.7	0.87	629	150	0	70	6			
139-049-08BDA	0-155	06/11/74	24	0.24	0.04	35	13	190	5	334	0	120	110	0.8	0.2	0.17	660	140	0	74	7			
139-049-08BDA	0-155	06/27/73	25	0.15	0.03	33	19	166	5.8	355	0	92	90	0.5	1	0	607	161	0	68	5.7	1040	7.5	
139-049-08BDA	0-155	06/14/72	15	0.31	0.08	37	14	187	5.5	331	0	124	116	0.7	0.9	0.75	664	152	0	72	6.6		8.3	
139-049-08BDA	0-155	05/11/71	25	0.52	0.04	37	15	194	5.6	345	0	133	126	1	0.2	0.62	708	155	0	72	6.8		7.8	
139-049-08BDA	0-155	06/16/70	26	0.06	0.05	45	14	241	7.2	341	1	142	195	0.6	4.7	0	844	172	0	74	8		8.9	
139-049-08BDA	0-155	11/06/68	26	0.22	0.06	42	13	198	6	341	0	138	125	0.6	1	0.58	718	160	0	72	6.8		7.8	
139-049-08BDA	0-155	04/16/68	26	0.08		42	13	194	6.7	336	0	139	122	0.7	3.2	0.83	714	158	0	72	6.7			
139-049-08BDA	0-155	08/29/67	25	0.1		41	12	197	5.8	337	0	136	124	0.6	2	0.66	710	152		73	7			
139-049-08BDA	0-155	01/12/67		0.08		36	13			334	0	124	126		4.8			144	0	75	7.3			
139-049-08BDA	0-155	06/18/65	23	0.12		41	12	214	8.1	344	0	130	146	0.6	1.6	0.82	749	150	0	74	7.6		7.2	
139-049-08DCD	183-223	10/22/96		0.49	0.05	44	18	180	5.8	365	0	130	130	0.7	1.3		690	180	0	67	5.8	988	8.1	
139-049-08DCD	183-223	09/26/95		0.29	0.03	42	18	180	6.8	364	0	120	120	0.6	1		668	180	0	68	5.8	1065	13.8	
139-049-08DCD	183-223	06/02/94	27	0.49	0.05	43	18	170	5.8	347	0	110	110	0.6	4.6	0.6	661	180	0	66	5.5	1035	8	
139-049-08DCD	183-223	05/12/93	25	2	0.05	43	17	170	5.3	350	0	110	110	0.5	6.4	0.51	660	180	0	67	5.5	1073	8	
139-049-08DCD	183-223	09/03/92	26	0.35	0.05	42	17	170	6	342	0	110	120	0.7	2	0.53	663	180	0	67	5.5	1075	12	
139-049-08DCD	183-223	06/20/90	25	0.06	0.04	41	15	170	4.4	324	0	98	110	2.2	1	0.52	627	160	0	69	5.8	1096	9	
139-049-08DCD	183-223	06/20/89	27	0.44	0.04	40	16	160	6.4	323	0	95	100	0.6	0.5	0.6	606	170	0	67	5.3	1210	8	
139-049-08DCD	183-223	06/15/88	27	0.57	0.04	39	16	160	6.7	333	0	100	110	0.8	0.4	0.7	625	160	0	67	5.5			
139-049-08DCD	183-223	06/03/87	35	0.28	0.04	41	16	160	5.9	314	0	99	100	0.6	1.3	0.71	615	170	0	66	5.3	1050	10	7.72
139-049-08DCD	183-223	06/25/86	28	0.37	0.04	40	16	160	6.9	306	0	100	98	2.1	0.2	0.61	603	170	0	67	5.3	1120	11	
139-049-08DCD	183-223	06/19/85	27	0.51	0.04	40	16	160	5.6	323	0	100	100	0.6	1	0.25	610	170	0	67	5.3	990	9	
139-049-08DCD	183-223	06/21/84	27	0.03	0.04	37	15	160	6	321	0	100	95	1.4	1	0.61	601	150	0	68	5.7	980	22	
139-049-08DCD	183-223	06/16/83	26	0.03	0.03	38	15	150	7.1	312	0	93	100	1.2	1	0.44	586	160	0	66	5.2	1040	11	
139-049-08DCD	183-223	09/02/82	25	0.49	0.04	40	16	150	7.6	312	0	94	96	0.7	4.4	0.47	589	170	0	65	5	960	10	
139-049-08DCD	183-223	06/19/81	27	0.07	0.03	44	17	170	8.2	362	0	110	110	1.5	1	0.23	667	180	0	66	5.5			
139-049-08DCD	183-223	06/24/80	24	0.42	0.06	41	19	150	4.1	318	0	100	110	0.7	1	0.49	608	180	0	64	4.9	1200	9	
139-049-08DCD	183-223	07/17/79	28	0.53	0.14	42	18	150	4.6	300	0	99	110	0.6	1	0.4	602	180	0	64	4.9			
139-049-08DCD	183-223	06/23/78	20	0.22	0.08	42	13	160	7.9	340	0	100	100	0.5	0.5	0.64	612	160	0	67	5.5	1070	21	
139-049-08DCD	183-223	06/22/77	8.1	0.67	0.06	40	15	150	4.5	316	4	99	100	0.3	1	0.35	579	160	0	66	5.2	1040		
139-049-08DCD	183-223	06/23/76	26	0.73	0.08	35	15	160	4.4	308	0	100	100	0.6	1	0.57	595	150	0	69	5.7	1700		
139-049-09ADD	172-177	07/08/92	25	0.06	0.07	44	15	130	5.5	319	0	95	80	0.4	4.5	0.51	557	170	0	61	4.3		8.8	
139-049-09ADD	172-177	08/26/88	23	0.05	0.09	45	16	130	5.6	318	0	96	81	0.3	3.7	0.5	558	180	0	60	4.2	920	11	
139-049-09ADD	172-177	10/27/82	26	0.03	0.07	45	15	140	7.5	323	0	95	84	0.4	1	0.47	573	170	0	62	4.7	925	8	
139-049-09BBA	172-203	10/22/96		0.5	0.04	41	16	150	5.3	333	0	110	110	0.5	1.2		599	170	0	65	5	870	8	
139-049-09BBA	172-203	09/26/95		0.62	0.03	43	17	160	6.6	340	0	110	100	0.4	1		606	180	0	65	5.2	980	8.3	
139-049-09BBA	172-203	06/02/94	27	0.52	0.04	44	17	150	5.7	330	0	90	99	0.4	5.7	0.52	603	180	0	64	4.9	953	9	
139-049-09BBA	172-203	09/03/92	26	0.42	0.04	44	17	150	5.7	340	0	100	98	0.3	6.1	0.46	615	180	0	64	4.9	972	10	
139-049-09BBA	172-203	06/20/90	17	1.4	0.12	42	15	150	4.5	304	0	100	110	1.2	1.1	0.43	593	170	0	65	5	1081	8	
139-049-09BBA	172-203	06/20/89	29	0.16	0.04	43	17	150	6.5	330	0	98	98	0.4	5	0.57	611	180	0	64	4.9	1190	8	
139-049-09BBA	172-203	06/15/88	26	0.14	0.03	40	15	160	6.5	337	0	100	110	0.5	4.4	0.67	629	160	0	67	5.5			
139-049-09BBA	172-203	06/03/87	32	0.03	0.04	44	16	150	6	327	0	100	100	0.5	0.7	0.68	611	180	0	64	4.9	1070	9	7.73
139-049-09BBA	172-203	06/26/86	27	0.02	0.04	41	15	150	6.7	309	0	110	94	0.9	0.3	0.68	598	160	0	65	5.2	1020	7	
139-049-09BBA	172-203	06/19/85	27	0.56	0.04	43	16	160	5.7	345	0	110	100	0.5	1	0.24	634	170	0	66	5.3		10	
139-049-09BBA	172-203	06/21/84	27	0.52	0.04	42	16	160	6.4	330	0	100	100	0.5	0.3	0.57	616	170	0	66	5.3	1000	12	
139-049-09BBA	172-203	06/16/83	22	0.5	0.09	40	16	160	6.9	330	0	100	110	0.9	1	0.39	621	170	0	67	5.3	1070	11	
139-049-09BBA	172-203	11/11/82	25	0.42	0.05	41	16	170	9.1	331	0	110	100	0.8	1	0.44	637	170	0	67	5.7	1020	8	
139-049-09BBA	172-203	11/11/82	26	0.04	0.03	39	16	170	8.8	332	0	110	110	0.8	4	0.51	649	160	0	68	5.8	1020		
139-049-09BBA	172-203	09/02/82	25	0.04	0.04	45	16	170	7.9	342	0	99	100	1	1.2	0.46	634	180	0	66	5.5	1000	14	
139-049-09BBA	172-203	06/19/81	26	0.28	0.04	42	16	170	8.1	372	0	110	100	0.8	1	0.55	658	170	0	67	5.7			
139-049-09BBA	172-203	06/24/80	24	0.18	0.04	41	19	170	4.2	348	0	110	110	0.8	1	0.16	651	180	0	67	5.5	1240	9	
139-049-09BBA	172-203	07/17/79	28	0.1	0.12	41	16	170	5.2	343	0	110	100	1.8	1	0.4	643	170	0	68	5.7	1020	14	
139-049-09BBA	172-203	06/23/78	20	0	0.04	42	13	160	4.6	339	0	110	100	0.5	1	0.73	619	160	0	68	5.5	1080	17	
139-049-09BBA	172-203	06/22/77	7.4	0.28	0.06	42	16	160	4.6	350	7	99	98	0.2	1	0.38	608	170	0	66	5.3	1080		

Location	Screened Interval (ft)	Date Sampled	(milligrams per liter) SiO_2	Fe	Mn	Ca	Mg	Na	K	HCO_3	CO_3	SO_4	Cl	F	NO_3	B	TDS	Hardness as $CaCO_3$	NCH	% Na	SAR	Spec Cond (µmho)	Temp (°C)	pH
139-049-09BBA	172-203	06/23/76	28	0.75	0.06	39	13	160	4.8	348	0	100	90	0.5	2.6	0.53	610	150	0	69	5.7	1180		
139-049-09BBA	172-203	06/18/75	19	0.55	0.02	37	14	160	4.2	340	0	89	94	0.4	1	0.59	587	150	0	69	5.7			
139-049-09BBA	172-203	06/11/74	25	0.55	0.08	36	12	160	4.3	354	0	88	82	0.6	0	0.17	583	140	0	71	5.9			
139-049-09BBA	172-203	06/27/73	26	0.26	0.04	33	20	181	6.2	337	0	121	108	0.7	3	0	665	163	0	70	6.2	1130	7.5	
139-049-09BBA	172-203	06/14/72	14	0.3	0.03	30	13	172	4.5	363	0	91	83	0.6	1	0.75	589	127	0	74	6.6	990		
139-049-09BBA	172-203	06/13/72	14	0.31	0.03	30	12	174	4.4	365	0	92	84	0.6	1	0.82	593	125	0	74	6.8	1000		
139-049-09BBA	172-203	06/12/72	14	0.29	0.03	30	11	175	4.4	364	0	104	82	0.6	1	0.68	602	119	0	75	7		7	
139-049-09BBA	172-203	06/11/72	15	0.29	0.02	29	11	177	4.4	366	0	82	92	0.6	1	0.61	593	119	0	76	7.1	1000		
139-049-09BBA	172-203	06/10/72	14	0.27	0.04	28	12	182	4.6	369	0	91	87	0.6	0.2	0.64	602	119	0	76	7.3	1000		
139-049-09DDD3	168-178	07/18/78	28	0.43	0.11	51	15	96	6.2	270	0	84	76	0.3	1	0.16	491	190	0	51	3	825	8.5	
139-049-09DDD3	168-178	07/09/64	20	0.29		50	14	101	6.6	256	6	92	72	0.4	0	0.6	488	184	0	53	3.2			
139-049-09DDD3	168-178	06/24/80	28	0.06	0.1	49	19	110	4	277	0	86	81	0.3	1	0.21	515	200	0	54	3.4	800	10	8.1
139-049-10BAA	204-210	08/26/88	23	0.15	0.09	42	15	190	4.4	386	0	23	170	0.2	0.9	0.66	659	170	0	71	6.3	1200	9	
139-049-10BAA	204-210	10/28/82	25	0.18	0.08	50	20	240	7.7	358	0	72	250	0.2	0.6	0.58	842	210	0	71	7.2	1430	7	
139-049-10CCC	178-181	07/08/92	16	0.07	0.11	68	27	56	5.3	222	0	200	20	0.5	1.6	0.44	504	280	99	30	1.5		9	
139-049-10CCC	178-181	08/26/88	22	0.09	0.1	49	14	120	5.5	302	0	90	80	0.3	0.3	0.31	531	180	0	58	3.9	867	9	
139-049-10CCC	178-181	07/22/81	26	0.26	0.08	48	17	120	7.4	291	0	96	83	0.3	1	0.18	542	190	0	57	3.8	850	8	7.9
139-049-11BAA	0-16	10/05/64	3.2	0.12		18	9.7	28	3.6	70	3.8	70	11	1.1	0		182	86	22	40	1.3		15	
139-049-11CBB	377-403	07/27/79				29	15	199	5	342		119	121								7.4			
139-049-11CBB	377-403	09/01/82	26	0.2	0.06	30	11	200	7.1	328	0	110	120	0.6	4.4	0.49	672	120	0	77	7.9	1100	18	
139-049-11CBB	377-403	03/13/64	20	0.46		38	9	191	7	351	0	108	112	0.9	1	0	659	132	0	75	7.2			
139-049-16BAA	229-232	06/17/80	28	0.01	0.02	29	16	230	4.8	434	0	130	120	0.6	1	0.65	774	140	0	77	8.4	1300	10	8.1
139-049-16BDC	211-261	10/22/96		0.66	0.04	39	16	130	4.9	289	0	100	93	1.4	0.8		528	160	0	62	4.5	781	8.5	
139-049-16BDC	211-261	09/26/95		0.54	0.02	38	16	130	5.7	294	0	100	88	0.5	1		525	160	0	63	4.5	845	8.2	
139-049-16BDC	211-261	06/02/94	26	0.34	0.03	40	16	130	5	285	0	98	86	0.5	5.2	0.44	548	170	0	62	4.3	868	8	
139-049-16BDC	211-261	05/12/93	25	0.46	0.04	41	16	130	4.7	294	0	98	87	0.4	5.3	0.39	553	170	0	62	4.3	880	8	
139-049-16BDC	211-261	09/03/92	26	0.48	0.03	39	16	130	5	296	0	100	88	0.5	5.8	0.41	557	160	0	62	4.5	895	10	
139-049-16BDC	211-261	06/20/90	24	0.27	0.03	37	14	140	4.1	286	0	100	91	0.6	5.9	0.4	558	150	0	66	5	971	8	
139-049-16BDC	211-261	06/20/89	27	0.27	0.03	37	15	140	6.1	291	0	100	91	0.6	1	0.52	562	150	0	65	5	1160	9	
139-049-16BDC	211-261	06/15/88	27	0.48	0.03	37	15	150	6.2	307	0	100	89	0.6	3.8	0.62	581	150	0	67	5.3			
139-049-16BDC	211-261	06/03/87	34	0.55	0.03	38	15	150	5.5	297	0	100	91	0.5	0.5	0.7	582	160	0	67	5.2	1000	10	7.81
139-049-16BDC	211-261	06/25/86	27	0.02	0.02	38	15	150	6.5	304	0	110	92	1.5	1	0.66	592	160	0	66	5.2	975	12	
139-049-16BDC	211-261	06/19/85	26	0.52	0.02	37	15	160	5.2	321	0	110	94	0.6	1	0.23	608	150	0	68	5.7	750	10	
139-049-16BDC	211-261	08/28/84	25	0.38	0.02	37	15	150	6.5	319	0	110	89	0.5	0.3	0.55	591	150	0	67	5.3	1080	9	
139-049-16BDC	211-261	06/16/83	27	0.04	0.04	39	16	120	6.3	312	0	60	67	0.5	0	0.35	490	160	0	60	4.1	880	11	
139-049-16CDD	238-243	07/08/92	26	0.24	0.05	49	17	100	5.3	281	0	77	83	0.3	4.4	0.28	501	190	0	52	3.2		8.8	
139-049-16CDD	238-243	09/01/88	31	0.16	0.06	48	17	100	6	295	0	82	82	0.4	4.1	0.36	516	190	0	52	3.2	902	10	
139-049-16CDD	238-243	08/04/83	30	0.09	0.06	51	18	96	6	271	0	81	78	0.3	1	0.31	495	200	0	50	2.9	950	12	
139-049-16CDD2	222-298	10/22/96		0.56	0.05	50	18	110	5.1	272	0	96	97	0.5	1.2		512	200	0	54	3.4	762	8.5	
139-049-16CDD2	222-298	09/26/95		0.51	0.04	49	19	110	5.9	278	0	97	93	0.4	1		513	200	0	54	3.4	850		
139-049-16CDD2	222-298	06/02/94	28	0.59	0.05	52	19	110	5.3	269	0	92	95	0.4	4.7	0.36	540	210	0	53	3.3	849	9	
139-049-17AAD	298-301	10/05/94	24	0.28	0.16	29	11	350	5.5	625	0	8.6	300	0.2	14	0.9	1050	120	0	86	14	1708	7.4	
139-049-17AAD	298-301	06/02/94	31	0.35	0.12	19	7	380	4.1	637	0	0.4	310	0.2	14	1	1080	77	0	91	19	1752	9	
139-049-17AAD	298-301	05/12/93	23	0.22	0.17	33	9	350	6.1	620	12	7.8	280	0.2	4.7	0.8	1030	120	0	86	14	1626	9	
139-049-17AAD	298-301	05/12/93	20	2	0.23	35	9	330	6	593	7	5.8	260	0.2	12	0.7	980	120	0	84	13	1641	8	
139-049-17AAD	298-301	07/08/92	24	0.55	0.19	34	9	330	6.1	603	0	3.3	250	0.2	12	0.74	967	120	0	85	13		9	
139-049-17AAD	298-301	09/01/88	15	0.36	0.3	32	10	240	7.6	471	0	6.6	190	0.2	1.8	0.46	736	120	0	80	9.5	1370	10	
139-049-17AAD	298-301	06/17/80	35	0.13	0.03	15	6.4	430	3.2	655	0	2.5	320	0.2	1	0.72	1140	64	0	93	23	1800	10	
139-049-18BBB	150-210	07/10/92	26	0.13	0.15	74	23	390	11	425	0	180	450	0.5	8.2	0.73	1370	280	0	74	10		8.2	
139-049-18BBB	150-210	08/26/87	28	2.2	0.26	88	24	380	11	428	0	140	460	0.6	59	0.5	1400	320	0	71	9.2	2200	9	
139-049-18BBB	150-210	09/20/88	27	0.03	0.14	73	23	400	10	412	0	180	460	0.5	7.2	0.81	1380	280	0	75	10	2480	8	
139-049-18BBB	150-210	06/23/80	31	0.02	0.15	68	27	380	7.8	449	0	100	450	0.5	1	0.55	1290	280	0	74	9.9	2350	10	8.1
139-049-18BBB	150-210	07/18/78	31	0.06	0.16	68	20	370	10	454	0	77	450	0.6	5.4	0.29	1260	250	0	75	10	2000	11	
139-049-18BBB	150-210	07/23/73	27	0.1	0.2	31	40	380	8	455	0	77	440	0.5	5	0.39	1230	240	0	77	11		8	
139-049-18BBB	150-210	00/00/63	23	0.54		62	23	470	20	381	0	300	472	1	1	1.55	1562	250	0	79	13			
139-049-21AAA3	244-249	07/08/92	5.5	0.04	0.2	55	21	320	21	273	0	310	280	0.6	0	1.8	1150	220	0	74	9.4		9	
139-049-21AAA3	244-249	08/27/87	7	0.02	0.48	65	21	290	22	280	0	310	300	0.7	6.8	1.3	1160	250	19	70	8		11	
139-049-21AAA6	43-48	09/14/88	30	3.6	0.2	120	50	140	8.9	755	0	190	12	0.1	12	0.29	939	510	0	37	2.7	1460	9	
139-049-21AAA6	43-48	08/04/83	34	2.9	0.27	130	49	140	8.9	732	0	220	8.4	0.1	1	0.3	956	530	0	36	2.6	1750	11	
139-049-21DCD	191-197	09/01/88	29	0.39	0.12	47	17	79	5.6	284	0	69	52	0.3	4	0.35	444	190	0	47	2.5	753	10	

Location	Screened Interval (ft)	Date Sampled	(milligrams per liter) SiO_2	Fe	Mn	Ca	Mg	Na	K	HCO_3	CO_3	SO_4	Cl	F	NO_3	B	TDS	Hardness as $CaCO_3$	NCH	% Na	SAR	Spec Cond (µmho)	Temp (°C)	pH
139-049-21DCD	191-197	08/14/81	26	0.02	0.14	52	17	85	5.9	293	0	75	57	0.3	1	0.28	464	200	0	47	2.6	670		8.5
139-049-22BBB	130-220	09/01/88	28	0.13	0.1	56	18	130	6.7	336	0	120	83	0.4	3.7	0.57	613	210	0	56	3.9	1010	10	
139-049-22BBB	130-220	06/24/80	28	0.08	0.11	54	18	130	4.3	313	0	110	100	0.4	1	0.21	600	210	0	57	3.9	1000	10	8
139-049-22BBB	130-220	07/20/73	25	1.1	0.17	65	21	120	6.8	357	0	110	75	0.4	2.5	0.34	603	250	0	50	3.3		8	
139-049-22BBB	130-220	00/00/63	20	0.2		48	17	128	8	264	0	112	108	0.5	0	1.45	573	192	0	58	4.2			
139-049-24DAA	0-90	05/13/65	19	0.11		352	524	322	4.4	654	0	2790	15	0.4	12	0.5	4360	3030	0	19	2.5		7.8	
139-049-28DDD	148-151	07/08/92	25	0.11	0.04	34	13	100	5.5	315	0	66	40	0.4	4.2	0.41	444	140	0	60	3.7		8.8	
139-049-28DDD	148-151	09/02/88	30	0.08	0.05	35	13	100	6	322	5	62	36	0.4	3.8	0.48	451	140	0	59	3.7	721	9	
139-049-28DDD	148-151	06/17/80	29	0.07	0.03	36	12	110	3.8	326	0	65	37	0.4	1	0.21	456	140	0	62	4	800	10	8
139-049-29BCD	0-238	10/23/96		0.14	0.04	26	10	250	6.7	439	0	150	130	1.2	1.1		791	110	0	83	10	1088	9.7	
139-049-29BCD	0-238	09/28/95		0.32	0.04	26	11	250	7.5	446	0	150	120	1.1	1		787	110	0	82	10	1218	10.3	
139-049-29BCD	0-238	06/01/94	18	0.65	0.04	26	11	250	7	432	0	130	120	1	6	1.2	784	110	0	82	10	1222	10	
139-049-29BCD	0-238	05/12/93	17	0.72	0.05	28	11	240	7	441	0	140	130	1	7.4	1.1	800	120	0	81	9.5	1371	5	
139-049-29BCD	0-238	09/01/92	16	0.83	0.04	26	11	240	7.2	438	0	140	130	1.1	7.1	1.3	797	110	0	81	10	1299	12	
139-049-29BCD	0-238	06/19/90	17	0.51	0.04	27	10	250	5.9	429	0	130	130	1.1	1.2	1.1	785	110	0	82	10	1367	8	
139-049-29BCD	0-238	06/20/89	19	0.63	0.03	26	11	250	8	426	0	130	130	1	1.6	1.4	789	110	0	82	10	1480	8	
139-049-29BCD	0-238	06/15/88	18	0.94	0.04	26	11	250	8.3	427	0	140	130	1.1	0.3	1.4	797	110	0	82	10			
139-049-29BCD	0-238	06/04/87	23	0.38	0.04	26	11	250	7	422	0	140	130	1.1	0.5	1.4	798	110	0	82	10	1338	10	7.84
139-049-29BCD	0-238	06/25/86	20	0.49	0.04	26	11	260	8.7	425	0	140	120	1.1	0.6	1.9	799	110	0	82	11	1160	13	
139-049-29BCD	0-238	06/19/85	18	0.7	0.04	27	11	250	7	419	0	140	130	1	6.1	1.2	798	110	0	82	10		11	
139-049-29BCD	0-238	06/21/84	18	0.9	0.05	26	11	260	7.8	418	0	140	130	1.1	1	1.6	803	110	0	82	11	1398	13	
139-049-29BCD	0-238	06/16/83	18	1.2	0.05	25	11	260	9.2	437	0	130	130	1.1	1	0.69	802	110	0	83	11	1360	11	
139-049-29BCD	0-238	09/01/82	16	1.3	0.04	24	11	260	9.1	428	0	140	130	0.9	5.9	2.6	812	110	0	83	11	1320	12	
139-049-29BCD	0-238	06/24/80	16	1.1	0.04	26	13	260	5.6	447	0	150	130	1.2	1	0.85	825	120	0	82	10	1480	10	
139-049-29BCD	0-238	06/07/79	19	1.1	0.08	26	13	250	6	438	0	140	130	1.2	1	0.37	804	120	0	81	9.9			
139-049-29BCD	0-238	06/23/78	13	1	0.9	28	9.7	250	5.9	423	0	140	130	1.1	0.6	1.5	790	110	0	82	10	1360	20	
139-049-29BCD	0-238	06/22/77	11	0.79	0.05	27	13	260	5.7	450	0	150	130	0.7	1	1.1	822	120	0	82	10	1380	13	
139-049-29BCD	0-238	06/22/76	19	1.4	0.06	26	8.5	260	5.8	439	0	150	120	0.9	1	1.2	810	100	0	84	11	1320		
139-049-29BCD	0-238	06/18/75	18	0.27	0.08	42	16	160	6.2	396	0	98	72	0.4	4.9	0.98	614	170	0	66	5.3			
139-049-29BCD	0-238	06/11/74	17	1.4	0.04	26	13	250	5.9	437	0	140	130	1.2	1	1.1	802	120	0	81	9.9			
139-049-29BCD	0-238	06/27/73	17	1.3	0.02	26	13	264	6.4	436	0	144	129	1	1	0.41	818	120	0	82	10	1410	7.5	
139-049-29BCD	0-238	06/14/72	10	1.3	0.08	26	13	261	6.2	435	0	155	138	1.6	1	1.1	828	118	0	82	10		8.9	
139-049-29BCD	0-238	05/10/71	18	0.68	0.04	27	11	259	6.4	435	0	148	129	1.6	1	0.9	817	114	0	82	11		8.3	
139-049-29BCD	0-238	06/16/70	18	1	0.05	28	10	261	5.8	435	0	141	131	1.2	2.5	0.48	814	113	0	82	11		8.3	
139-049-29BCD	0-238	11/06/68	19	0.92	0.05	29	10	252	7.2	433	0	150	130	1.1	0	1.1	813	114	0	82	10			
139-049-29BCD	0-238	04/16/68	19	0.22		30	9	259	7.6	432	0	149	128	1.2	1	1.5	819	112	0	82	11			
139-049-29BCD	0-238	08/29/67	18	1.5		30	11	260	6.7	424	0	154	132	1	6.3	1.3	831	122		81	10			
139-049-29BCD	0-238	01/12/67				27	11			434	0	137	129					111	0	84	11			
139-049-29BCD	0-238	11/18/64	16	0.48		28	9.2	257	8.2	432	0	140	125	1.1	1	0.85	800	108	0	83	10	840	7.2	
139-049-29DDD1	238-243	05/31/94	26	0.16	0.08	52	20	140	5.9	281	0	96	140	0.6	4.9	0.49	624	210	0	58	4.2	1108	9	
139-049-29DDD1	238-243	11/29/90	29	0.02	0.08	50	19	160	5.2	300	0	120	140	0.6	1	0.56	673	200	0	62	4.9	1130	7	
139-049-29DDD2	142-147	09/29/94	26	0.03	0.13	46	18	82	6.7	335	0	60	39	0.3	3.6	0.45	447	190	0	47	2.6	690	8.1	
139-049-29DDD2	142-147	05/31/94	21	0.02	0.33	42	14	28	8.4	226	0	20	15	0.1	5.9	0.19	266	160	0	26	1	477	9	
139-049-29DDD2	142-147	11/29/90	30	0.03	0.07	51	20	96	5	334	0	77	54	0.3	1	0.49	500	210	0	49	2.9	858	7	
139-049-30DCC	165-170	09/29/94	18	0.03	0.31	100	30	310	15	296	0	280	400	0.2	6.9	0.6	1310	370	130	63	7	1959	8.1	
139-049-30DCC	165-170	05/31/94	17	0.65	0.67	130	29	240	21	274	0	250	380	0.2	7.6	0.43	1210	440	220	53	5	1839	6	
139-049-30DCC	165-170	11/29/90	30	0.03	0.08	96	30	310	8.1	305	0	270	370	0.3	1	0.71	1270	360	110	64	7.1	2230	8	
139-049-32CCA	0-183	11/18/64	22	0.12		56	37	142	9	317	0	113	140	0.4	9.8	0.15	685	291	30	51	3.6	900	20	
139-049-32DDC	240-245	05/13/93	24	0.46	0.15	84	26	220	7.3	293	0	190	260	0.4	5.4	0.47	962	320	77	59	5.3	1526	10	
139-050-01CCC	258-261	07/10/92	10	0.03	0.08	34	14	390	9.3	375	0	170	390	0.7	6.1	0.91	1210	140	0	85	14		7.9	
139-050-01CCC	258-261	09/02/88	23	0.62	0.09	43	15	410	9.1	379	0	200	390	0.6	7	0.92	1290	170	0	83	14	2270	10	
139-050-01CCC	258-261	06/09/81	28	0.26	0.13	55	15	480	14	386	0	300	450	0.6	1	0.87	1530	200	0	83	15	2510	8	7.9
139-050-01CCC	258-261	06/24/80	29	0.09	0.13	58	18	470	8	376	0	310	450	0.6	1	0.72	1530	220	0	82	14	2550	9	7.9
139-050-01DC	187-212	05/11/71	26	1.1	0.05	60	24	336	5.6	559	0	17	362	0.6	1	0.52	1110	249	0	74	9.3		8.9	
139-050-02BAA	225-230	09/28/95		0.03	0.17	45	14	430	9.2	349	0	290	380	0.6	1		1340	170	0	84	14	1950	9.1	
139-050-02BAA	225-230	11/13/91	26	0.01	0.07	44	16	450	9.5	373	0	310	400	0.7	5.8	1.1	1450	180	0	84	15	2460	7	
139-050-02DBC	0-250	05/13/65	22	0.12		54	23	340	9.7	361	0	170	345	0.5	3.2	1.8	1150	228	0	75	9.8		8.3	
139-050-04DCD	0-60	12/14/67	26	2.9		156	53	177	26	418	0	269	296	0.1	8	0.78	1220	606	263	38	3.1			
139-050-06ABB	0-150	10/13/67	29	0.7		99	24	496	7.6	416	0	239	618	0		1.2	1720	346	4	75	12			
139-050-06ABB	0-150	07/12/67				82	35	482		366	0	161	659					350	200					

Location	Screened Interval (ft)	Date Sampled	(milligrams per liter) SiO_2	Fe	Mn	Ca	Mg	Na	K	HCO_3	CO_3	SO_4	Cl	F	NO_3	B	TDS	Hardness $CaCO_3$	as NCH	% Na	SAR	Spec Cond (µmho)	Temp (°C)	pH
139-050-06ABB	0-150	00/00/67		16.1		84	28	550		409	0	170	560					323						
139-050-06BBB2	0-165	10/05/64	5	0.32		102	46	808	24	379	0	1070	573	1.3	5	3.1	2820	445	135	79	17		13.9	
139-050-10DA	0-116	07/15/64	24	0.28		53	20	215	11	368	0	94	205	0.4	17	0	821	216	0	67	6.4		7.8	
139-050-10DA	0-116	07/14/64	25	0.28		54	19	215	11	371	0	94	202	0.4	17	0	820	214	0	67	6.4		7.8	
139-050-10DA	0-116	07/13/64	18	0.31		51	21	227	17	381	0	126	209	0.6	0	0	857	214	0	68	6.7		7.8	
139-050-12CCC	178-183	07/10/92	27	0.05	0.04	52	23	270	9.3	413	0	78	300	0.7	8.9	0.67	973	220	0	71	7.9		8	
139-050-12CCC	178-183	06/15/88	31	0.31	0.04	50	24	280	9.2	416	0	110	310	0.5	0.5	0.84	1020	220	0	72	8.2			
139-050-23AAA	148-151	07/10/92	19	1.5	0.41	140	53	86	12	849	0	2.5	75	0.1	0	0.23	808	570	0	24	1.6		8	
139-050-23AAA	148-151	09/01/88	18	0.25	0.58	140	49	96	12	778	0	0.4	80	0.1	3	0.26	783	550	0	27	1.8	1440	11	
139-050-23AAA	148-151	09/01/82	19	4.2	0.67	150	48	70	16	778	0	11	66	0.2	1	0.24	769	570	0	20	1.3	1340	11	
139-050-23AAA	148-151	07/18/78	17	0.43	0.59	77	21	27	6.3	357	0	6.6	26	0.1	1	0.1	359	280	0	17	0.7	650	9	
139-050-23AAA	148-151	07/09/64	24	1.6		139	58	90	8.5	784	0	42	76	0.2	0	0.65	825	585	0	25	1.6			
139-050-31BBB	0-417	03/04/64	22	0.24		98	24	740	16	412	0	500	793	1	1	1.5	2400	344	6	82	17			
139-051-02CDC	0-107	01/01/67		2				514		472	0	93	510		0			170						
139-051-07BCC	0-300	11/28/66		1.2						312	0	1530	647		2			202	0	93	36			
139-051-32CAB1	0-180	05/13/65	21	0.11		76	26	189	11	339	0	238	132	0.2	1.9	1.2	863	295	10	57	4.8		8.9	
140-049-05BBA	244-247	07/07/92	16	0.12	0.1	36	11	330	7.5	354	0	180	260	0.8	7.7	0.9	1020	140	0	83	12		8.2	
140-049-05BBA	244-247	08/25/88	19	0.05	0.06	35	10	66	7	179	0	61	55	0.4	3.2	0.12	345	130	0	51	2.5	323	11	
140-049-05BBA	244-247	06/10/81	21	0.1	0.03	35	13	360	12	368	0	230	290	0.8	1	0.55	1140	140	0	83	13	1790	8.5	8
140-049-05BBA	244-247	07/01/80	22	0.04	0.03	36	17	350	6.9	351	0	240	290	0.7	1	0.86	1140	160	0	82	12	2000	10	8.1
140-049-07DCA1	0-154	05/12/65	23	0.86		86	28	159	7.3	693	0	17	58	0.3	1.2	0.9	718	318	0	51	3.9	900	8.3	
140-049-08DDA	148-151	09/26/95		0.21	0.04	36	13	240	7.7	325	4	170	180	0.5	1		812	140	0	77	8.8	1364	8.4	
140-049-08DDA	148-151	09/27/91	21	0.12	0.04	35	13	230	6.9	319	0	150	180	0.5	6.3	0.63	800	140	0	77	8.4	1446	8	
140-049-08DDA	148-151	08/26/87	18	0.11	0.04	36	13	230	7.8	313	0	150	180	0.6	7.9	0.34	798	140	0	77	8.4	1400	9	
140-049-08DDA	148-151	07/01/80	24	0.02	0.04	37	16	240	5.7	329	0	170	180	0.5	1	0.34	837	160	0	76	8.3	1500	9	8.1
140-049-15DDC1	0-80	06/24/64	15	0.4		446	996	2000	83	585	0	7480	568	4	556	0	12400	5210	4740	45	12		11.7	
140-049-16DAA	0-146	06/26/64	24	0.44		40	13	145	10	412	5	19	84	0.4	2	0.65	545	154	0	65	5.1		14.4	
140-049-17BBB	212-215	07/07/92	20	0.08	0.02	25	10	280	7.6	454	0	19	240	0.6	6.8	0.65	834	100	0	84	12		8.3	
140-049-17BBB	212-215	08/25/88	23	0.1	0.02	25	11	290	7.2	439	0	25	240	0.7	6.4	0.78	845	110	0	84	12	1600	9	
140-049-17BBB	212-215	06/26/80	24	0.02	0.02	23	13	280	6	453	0	26	250	0.6	1	0.44	847	110	0	84	12	1600	9	8.1
140-049-18DDD	165-170	09/26/95		0.02	0.03	31	12	260	8.9	461	0	16	240	0.6	1		797	130	0	80	9.9	1307	8.2	
140-049-18DDD	165-170	11/13/91	18	0.06	0.04	30	14	260	8.2	453	0	14	240	0.7	6.8	0.62	815	130	0	80	9.9	1394	7	
140-049-19DDD2	153-156	07/07/92	39	0.03	0.37	89	27	34	12	290	0	150	28	0.2	2.6	0.11	525	330	96	18	0.8		11	
140-049-19DDD2	153-156	08/25/88	20	0.13	0.47	44	16	250	7.2	434	0	4.5	250	0.4	0.3	0.52	808	180	0	75	8.1	1510	10	
140-049-19DDD2	153-156	06/10/81	24	0.22	0.03	42	13	250	12	469	0	5.8	250	0.4	2.2	0.48	831	160	0	76	8.6	1440	8	8
140-049-19DDD2	153-156	06/26/80	24	0.05	0.06	45	21	230	8	432	0	66	210	0.4	0.1	0.27	818	200	0	70	7.1	1500	9	8.4
140-049-19DDD4	153-158	09/29/94	23	0.03	0.06	42	20	240	9.7	450	0	35	250	0.4	5.7	0.58	848	190	0	72	7.6	1343	7.7	
140-049-24DDD	0-80	05/12/65	21	0.1		268	123	85	5.3	617	0	749	28	0.2	46	0.25	1630	1180	670	14	1.4	1590	7.8	
140-049-30ADD1	156-161	09/27/95		0.21	0.07	45	19	280	9.8	431	0	62	280	0.4	1		909	190	0	75	8.8	1535	9.2	
140-049-30ADD1	156-161	09/27/91	20	0.14	0.03	46	20	280	9.2	436	0	81	280	0.4	8.6	0.56	961	200	0	74	8.6		8	
140-049-30ADD2	198-208	09/27/95		0.09	0.03	35	15	260	9.9	453	0	23	250	0.4	1		817	150	0	78	9.2	1373	7.7	
140-049-30ADD2	198-208	09/27/91	21	0.01	0.02	35	16	270	9.1	444	0	42	250	0.5	7.5	0.63	871	150	0	78	9.6	1541	8	
140-049-31ACB	0-18	05/12/65	16	0.38		160	124	74	14	373	0	435	95	0.1	210	0.35	1310	910	105	15	1.1	1350	5.6	
140-049-31CDC	0-200	01/01/63	20	0.72		34	18	402	12	517	0	18	430	1.3	2	1.55	1190	160	0	83	14			
140-049-32BBB	174-228	06/15/88	25	0.35	0.03	39	16	310	8.9	440	0	65	300	0.6	0.5	0.87	983	160	0	79	11			
140-049-32BBC	170-176	06/16/65	22	0.5		81	15	247	9.5	494	0	48	305	0.3	1.2	0.5	973	263	0	66	6.6		8.9	
140-049-33ABB	184-189	07/08/92	21	0.02	0.04	35	13	210	5.7	321	0	120	150	0.5	5.4	0.49	719	140	0	75	7.7		8.3	
140-049-33ABB	184-189	09/01/88	21	0.06	0.05	37	14	210	5.7	324	0	130	150	0.4	0.4	0.5	729	150	0	74	7.5	1250	10	
140-049-33ABB	184-189	10/28/82	23	0.12	0.07	40	15	200	8.3	312	0	120	150	0.6	0.3	0.44	712	160	0	72	6.9	1160	7	
140-049-34ABB2	163-168	05/25/94	27	0.4	0.18	67	23	240	6.9	353	0	260	190	0.5	8.3	0.49	998	260	0	66	6.5	1445	9	
140-049-34ABB2	163-168	05/26/94	27	0.02	0.13	57	19	230	6.8	349	0	210	190	0.4	0.9	0.51	914	200	0	70	7.1	1367	10	
140-049-34ABB2	163-168	07/08/92	22	0.36	0.2	84	29	260	7.7	369	0	360	180	0.4	6.5	0.52	1130	330	27	63	6.2		8.5	
140-049-34ABB2	163-168	09/01/88	21	0.15	0.08	61	19	240	6.9	355	0	220	180	0.4	0.4	0.51	924	230	0	69	6.9	1620	10	
140-049-34ABB2	163-168	10/28/82	22	0.17	0.08	50	15	230	9.6	335	0	140	190	0.5	0.2	0.49	823	190	0	72	7.2	1420	7	
140-049-34ABB3	163-168	09/29/94	23	0.02	0.07	49	16	220	8	344	0	170	180	0.4	5.3	0.57	841	190	0	71	6.9	1296	7.9	
140-049-34BBB	165-170	09/28/95		0.09	0.07	45	15	230	6.8	339	0	150	180	0.5	1		795	170	0	73	7.7	1278	8.3	
140-049-34BBB	165-170	11/13/91	17	0.08	0.1	45	16	220	7.5	343	0	160	180	0.5	5.4	0.55	821	180	0	72	7.1	1293	7	
140-049-34CCCA	8-18	08/04/94	26	0.06	0.08	460	270	290	6.1	529	0	2200	140	0.3	14	0.09	3670	2300	1800	22	2.6	4450	11	
140-049-35BAA	171-176	05/24/94	28	0.02	0.18	46	17	93	3.9	391	0	0.4	64	0.4	7.6	0.27	454	190	0	52	2.9	746	9	
140-049-35BAA	171-176	05/25/94	29	0.04	0.19	46	17	100	3.8	392	6	0.4	67	0.4	0.9	0.27	464	190	0	53	3.2	724	9	

Location	Screened Interval (ft)	Date Sampled	(milligrams per liter) SiO_2	Fe	Mn	Ca	Mg	Na	K	HCO_3	CO_3	SO_4	Cl	F	NO_3	B	TDS	Hardness $CaCO_3$	as NCH	% Na	SAR	Spec Cond (µmho)	Temp (°C)	pH
140-049-35BAA	171-176	10/28/93	23	0.03	0.19	46	17	100	4.6	395	7	0.4	75	0.3	6.7	0.3	476	190	0	53	3.2	709	8	
140-049-35DDD	0-189	03/13/64	18	0.35		49	15	200	6	315	0	162	143	0.7	1	0	750	185	0	69	6.4			
140-049-36AAA	157-228	10/28/93	26	0.06	0.54	79	31	140	9	421	0	220	63	0.4	4.5	0.82	781	320	0	48	3.4	1093	8	
140-049-36AAA	157-228	09/01/88	25	0.74	0.98	100	40	150	7.6	430	0	340	63	0.3	0.3	0.73	941	410	62	44	3.2	1470	10	
140-049-36AAA	157-228	10/28/82	27	0.11	0.72	90	35	160	10	421	0	230	63	0.4	0.1	0.63	824	370	24	48	3.6	1260	7	
140-049-36AAA	157-228	07/17/73	25	8.7	3.3	290	160	210	7.1	591	0	1300	25	0.3	3.3	0.43	2320	1400	910	25	2.4		8	
140-049-36AAA	157-228	08/08/63	23	0.39		35	77	220	5	305	15	370	166	0.7	2	0.18	1063	400	150	54	4.9			
140-050-09ABB	258-263	10/26/93	26	1	0.13	88	30	550	18	325	0	410	630	0.5	11	1.2	1930	340	77	77	13	2940	8	
140-050-09ABB	258-263	09/20/88	28	0.69	0.1	93	30	560	15	305	0	420	640	0.5	15	1.2	1950	360	110	76	13	3370	8	
140-050-09ABB	258-263	08/04/83	26	0.82	0.12	90	29	550	17	303	0	410	640	0.6	0.9	0.92	1910	340	96	77	13	3750	11	
140-050-13CCC	164-169	08/25/88	60	1.6	0.08	29	9	400	8.8	384	0	160	370	0.9	6.2	1.4	1240	110	0	88	17	2240	12	
140-050-13CCC	164-169	08/05/83	27	0.08	0.07	29	9.5	390	11	370	0	150	370	0.8	0.4	0.72	1170	110	0	87	16	2300	13	
140-050-15BBB	251-256	09/26/95		0.11	0.18	90	30	660	18	321	0	500	740	0.5	1		2200	350	85	79	15	3350	8.5	
140-050-15BBB	251-256	11/13/91	26	0.02	0.07	90	30	650	16	317	0	480	720	0.7	0	1.2	2170	350	88	79	15	3590	7	
140-050-15DDDC1	298-303	07/07/92	23	0.13	0.11	59	20	510	14	334	0	170	540	0.8	8.3	0.99	1510	230	0	82	15		8.8	
140-050-15DDDC1	298-303	08/25/88	29	0.22	0.09	59	21	510	13	335	0	320	530	0.8	8.2	1.2	1660	230	0	82	15	3010	9	
140-050-15DDDC1	298-303	06/30/83	29	0.06	0.1	58	21	520	15	316	0	320	540	0.7	0	0.84	1660	230	0	82	15	2900	11	
140-050-15DDDC2	189-194	07/07/92	26	0.43	0.12	58	19	320	10	355	0	80	380	0.6	8.5	0.7	1080	220	0	75	9.4		9	
140-050-15DDDC2	189-194	08/25/88	31	0.16	0.11	58	19	320	9.6	351	0	99	380	0.7	7.5	0.83	1100	220	0	75	9.4	2040	9	
140-050-15DDDC2	189-194	06/30/83	30	0.18	0.13	58	20	340	11	332	0	110	410	0.6	0	0.52	1140	230	0	75	9.8	2075	11	
140-050-26CCC	218-223	10/26/93	26	0.02	0.08	39	14	460	11	344	0	330	420	0.7	9.3	1.2	1480	160	0	86	16	2370	7	
140-050-26CCC	218-223	06/28/83	29	0.07	0.09	40	14	480	11	355	0	320	430	0.7	1	0.85	1500	160	0	86	17	2600	11	
140-050-27CCC	152-157	09/29/94	27	0.17	0.48	99	27	420	26	485	0	370	450	0.1	13	0.96	1670	360	0	70	9.6	2360	8.1	
140-050-27CCC	152-157	07/07/92	29	0.32	0.05	35	16	560	7.6	559	0	350	380	0.1	16	1.2	1670	150	0	88	20		8.6	
140-050-27CCC	152-157	09/14/88	32	0.38	0.04	34	17	540	8.3	522	0	380	380	0.2	16	1.3	1670	160	0	88	19	2910	9	
140-050-27CCC	152-157	08/05/83	36	0.15	0.05	35	17	540	9.1	552	0	370	390	0.1	1	1.1	1670	160	0	87	19	3200	10	
140-050-32DCC	0-198	12/13/67	32	2.9		42	1.2	518	4.9	611	0	38	489	0.2	13	1.9	1440	110	0	91	21			
140-050-33CCC	0-82	12/13/67	30	0.9		126	25	191	8.8	335	0	173	282	0.4	8.9	0.68	1010	418	143	49	4.1			
140-050-35ABB	198-203	05/31/94	28	0.55	0.13	62	22	340	12	357	0	120	430	0.6	6.6	0.85	1200	250	0	74	9.4	2100	8	
140-050-35ABB	198-203	08/25/88	24	0.37	0.12	60	21	350	11	366	0	130	410	0.6	6.8	0.75	1190	240	0	75	9.8	2210	9	
140-050-35ABB	198-203	06/28/83	27	0.23	0.17	57	20	360	13	357	0	130	430	0.7	0	0.53	1210	220	0	76	11	2200	12	
140-050-35ABB	198-203	11/28/90	30	0.2	0.11	61	22	350	10	371	0	130	410	0.6	1	0.94	1200	240	0	75	9.8	2300	7	
140-050-35CDC	0-96	00/00/64		0.8						365	0	91	145		6			170						
140-050-35DDD	0-70	01/01/64		0.3						420	0	89	59		0			250						
140-050-36BAA	138-143	09/29/94	32	0.03	0.39	52	14	65	16	361	0	7.8	41	0.2	12	0.22	419	190	0	41	2	644	8.1	
140-050-36BAA	138-143	05/25/94	52	0.11	0.58	59	18	160	17	614	0	8.2	20	0.2	0	0.07	637	220	0	59	4.7	963	8	
140-050-36BAA	138-143	05/26/94	39	0.03	0.44	56	14	37	14	345	0	0.8	11	0.2	0	0.08	343	200	0	27	1.1	595	8	
140-050-36BAA	138-143	10/27/93	38	0.02	0.39	55	16	63	19	379	0	12	18	0.2	0	0.09	409	200	0	38	1.9	632	9	
140-050-36BAA	138-143	07/07/92	25	0.05	0.12	42	15	300	11	388	0	81	300	0.7	6.5	0.81	973	170	0	78	10		9	
140-050-36BAA	138-143	08/25/88	24	0.1	0.1	42	15	300	10	381	0	87	290	0.7	6.6	0.77	964	170	0	78	10	1780	9	
140-050-36BAA	138-143	08/05/83	31	0.24	0.08	42	15	300	12	369	0	86	310	0.7	1	0.67	981	170	0	78	10	1950	10	
140-050-36BBB	186-191	09/29/94	27	0.03	0.05	47	19	180	6.8	306	0	18	240	0.5	4.7	0.43	695	200	0	66	5.5	1168	7.9	
140-050-36BBB	186-191	05/24/94	31	0.09	0.05	47	19	170	5.7	304	0	26	230	0.5	6.3	0.37	686	200	0	65	5.2	1124	8	
140-050-36BBB	186-191	05/26/94	32	0.05	0.05	46	18	170	5.4	311	0	23	220	0.5	2	0.37	670	190	0	65	5.4	1081	8	
140-050-36BBB	186-191	10/27/93	25	0.04	0.05	46	19	170	6.7	304	2	28	220	0.5	5.2	0.41	673	190	0	65	5.4	1115	8	
140-050-36BBB	186-191	09/26/91	21	0.01	0.3	59	20	290	9.5	314	0	150	330	0.5	5.9	0.75	1040	230	0	72	8.3	1813	9	
140-050-36BBB	186-191	08/26/87	22	0.03	0.24	65	21	290	10	310	0	21	360	0.6	2.3	0.38	946	250		71	8	1900	10	
140-051-06CCC	0-84	05/13/65	21	0.12		91	26	150	11	329	0	262	90	0.2	1	1	815	332	55	49	3.6		8.3	
141-049-03CCC	166-169	07/07/92	25	0.47	0.04	38	16	210	6.6	360	0	65	190	0.5	7.3	0.53	736	160	0	73	7.2		8.5	
141-049-03CCC	166-169	08/24/88	29	0.34	0.04	38	16	220	6.3	349	0	74	200	0.5	0.3	0.64	757	160	0	74	7.6	1340	10	
141-049-03CCC	166-169	08/12/81	27	0.07	0.03	38	16	220	7.5	374	0	43	200	0.5	1	0.83	738	160	0	74	7.6	1400		7.8
141-049-06CDB	0-225	05/12/65	6.4	0.38		14	8.5	492	11	381	5	180	450	0.6	3.6	1.9	1360	70	0	93	26	1700	7.8	
141-049-28BBB	205-208	07/06/92	24	0.2	0.05	33	13	340	8.3	366	0	160	280	0.8	6.9	0.96	1050	140	0	83	12			
141-049-28BBB	205-208	08/24/88	26	0.04	0.04	33	13	330	7.7	362	0	190	280	0.8	5.5	1.1	1070	140	0	83	12	1910	12	
141-049-28BBB	205-208	08/12/81	27	0.01	0.06	37	12	360	9.3	394	0	200	290	0.7	1	0.69	1130	140	0	84	13	2100		8.7
141-049-30AAB	180-186	09/29/94	32	0.06	0.53	130	76	92	11	281	0	580	25	0.4	2.8	0.22	1090	640	410	24	1.6	1277	7.3	
141-049-30AAB	180-186	07/06/92	25	0.03	0.07	35	14	390	13	410	0	200	320	1	0	1.3	1200	150	0	84	14		9	
141-049-30AAB	180-186	08/24/88	27	0.04	0.07	36	14	390	12	414	0	200	320	1.2	0	1.5	1210	150	0	84	14	2240	12	
141-049-30AAB	180-186	08/11/81	27	0.02	0.06	36	15	400	13	412	0	230	330	1	1	1.2	1260	150	0	38	14	2200		8.4
141-049-30BBB	158-161	05/31/94	27	0.04	0.08	47	24	450	14	489	0	33	560	0.7	8.6	1	1410	220	0	81	13	2290	9	

Location	Screened Interval (ft)	Date Sampled	(milligrams per liter) SiO_2	Fe	Mn	Ca	Mg	Na	K	HCO_3	CO_3	SO_4	Cl	F	NO_3	B	TDS	Hardness $CaCO_3$	as NCH	% Na	SAR	Spec Cond (µmho)	Temp (∞C)	pH
141-049-30BBB	158-161	08/25/88	27	0.15	0.05	52	24	470	13	473	0	72	560	0.7	2	1	1450	230	0	81	13	2800	9	
141-049-30BBB	158-161	08/11/81	27	0.01	0.06	53	26	490	15	506	0	86	590	0.7	1	1	1540	240	0	80	14	3000		7.9
141-049-30BBB	158-161	11/28/90	30	0.04	0.06	58	25	470	13	501	0	64	550	0.7	1	1.1	1460	250	0	79	13	2680	6	
141-049-32CCD	144-147	07/06/92	23	0.04	0.02	37	19	230	8.1	511	0	0.4	200	0.6	11	0.63	782	170	0	73	7.7		9	
141-049-32CCD	144-147	08/25/88	26	0.25	0.02	38	20	230	7.4	483	0	0.8	200	0.6	9.6	0.71	771	180	0	73	7.5	1416	9	
141-049-32CCD	144-147	08/14/81	25	0.03	0.02	40	17	240	8.8	534	0	1.6	200	0.5	1	0.51	797	170	0	74	8	1100		8.3
141-049-32DCC1	240-246	09/26/95		0.81	0.29	45	19	330	9.9	648	0	3.7	280	0.6	1		1010	190	0	78	10	1644	8.5	
141-049-32DCC1	240-246	09/27/91	22	0.19	0.02	44	19	320	7.8	643	0	2.1	270	0.6	14	0.91	1020	190	0	78	10	1748	8	
141-049-32DCC1	240-246	08/26/87	24	0.11	0.03	45	20	310	8.7	620	0	1.6	290	0.7	12	0.51	1020	200	0	77	9.5	1950	9	
141-049-32DCC1	240-246	08/13/81	24	0.06	0.01	50	18	350	8.7	698	0	1.6	300	0.6	1	0.87	1100	200	0	78	11	1950		8
141-049-33CAB	0-185	05/12/65	20	0.42		44	18	221	8	325	0	139	189	0.5	1.1	1.2	800	186	0	71	7.1	990	8.3	
141-049-33DCC	201-204	07/07/92	20	0.28	0.03	42	16	300	7.3	345	0	180	250	0.6	6.6	0.77	994	170	0	78	10		8.8	
141-049-33DCC	201-204	08/25/88	23	0.39	0.03	43	16	290	7.1	344	0	190	250	0.7	0.3	0.92	990	170	0	78	9.7	1763	9	
141-049-33DCC	201-204	08/13/81	22	0.02	0.04	51	15	300	9	368	0	190	260	0.5	1	1.1	1030	190	0	76	9.5	1750		9.2
141-050-06DDD	128-131	05/26/64	23	0.73		56	17	278	10	508	5	52	248	0.5	1	0	940	210	0	76				
141-050-09AAA2	250-280	09/25/95		1.3	0.22	63	25	570	21	339	0	350	500	0.4			1700	260	0	81	15	2030	9.6	
141-050-09AAA2	250-280	09/27/91	23	0.08	0.15	85	33	900	23	398	0	710	960	0.9	19	1.7	2950	350	22	84	21	4540	7	
141-050-09AAA2	250-280	08/26/87	27	0.05	0.2	88	33	860	22	390	0	690	890	1	11	1	2820	360	36	83	20	4750	9	
141-050-09AAA2	250-280	05/23/64	25	0.36		91	33	930	30	401	0	789	913	0.9	0	2.7	3010	365	37	83	21			
141-050-11CDC	0-195	05/12/65	23	0.22		128	50	866	18	353	0	760	975	0.1	6.4	2.6	3000	525	236	77	16		8.3	
141-050-15DAA	138-143	09/25/95		1.3	0.16	130	53	570	24	327	0	440	780	0.5	1		2160	540	270	68	11	2970	7.8	
141-050-15DAA	138-143	11/14/91	25	0.02	0.06	130	53	580	23	322	0	450	790	0.7	0	1.2	2210	540	280	69	11	3610	7	
141-050-23CCC1	278-283	09/26/95		0.64	0.11	100	40	960	26	374	0	800	980	0.8	1		3090	410	110	82	21	4310	8.3	
141-050-23CCC1	278-283	11/13/91	26	0.02	0.08	100	40	940	25	370	0	780	990	1	0	1.7	3090	410	110	82	20	4920	6	
141-050-23CCC2	130-135	09/26/95		0.23	0.1	42	14	460	14	406	0	280	400	0.9	1		1410	160	0	85	16	2110	8	
141-050-23CCC2	130-135	11/13/91	27	0.02	0.04	42	14	460	13	391	0	280	440	1.1	0	1.6	1470	160	0	85	16	2540	6	
141-050-23DDD	118-121	07/06/92	18	5.1	0.1	130	51	160	6.5	683	0	0.8	240	0.3	20	0.27	968	540	0	39	3		7.8	
141-050-23DDD	118-121	08/24/88	20	3.8	0.1	130	53	160	6.5	645	0	3.3	250	0.4	0.2	0.33	946	540	14	39	3	1860	10	
141-050-23DDD	118-121	09/01/82	20	4.8	0.11	130	53	160	8.7	650	0	2.1	240	0.4	0.7	0.32	940	540	10	39	3	1750	11	
141-050-23DDD	118-121	08/12/81	23	0.24	0.09	120	51	190	7.5	695	0	4.9	250	0.2	1	0.09	990	510	0	44	3.7	1700		7.9
141-050-28AAA	278-283	10/05/94	28	0.05	0.07	23	7	500	7	479	0	290	380	1.1	12	1.6	1490	87	0	92	23	2330	7.4	
141-050-28AAA	278-283	10/26/93	24	0.04	0.06	22	7	510	7.4	468	0	300	370	1.1	11	1.5	1490	84	0	92	24	2210	8	
141-050-28AAA	278-283	05/12/93	25	0.06	0.1	25	7	500	6	488	6	280	380	1.1	13	1.4	1480	92	0	92	23	2510	8	
141-050-28AAA	278-283	07/06/92	13	0.44	0.12	16	7	3.5	5.7	111	0	0.4	7.8	0.2	19	0.05	128	69	0	9	0.2			
141-050-28AAA	278-283	08/25/88	32	0.07	0.1	25	8	500	6.9	460	0	270	360	1	3.9	1.6	1440	96	0	91	22	530	10	
141-050-28AAA	278-283	08/04/83	26	0.04	0.05	22	6.5	510	8.3	464	0	290	380	1	1	1	1470	82	0	92	24	3000	10	
141-050-33DDD	108-113	10/26/93	23	0.34	0.14	100	35	280	15	349	0	210	410	0.3	9.8	0.82	1260	390	110	60	6.2	1902	8	
141-051-19CDD	0-319	06/25/64	8.9	0.36		46	14	862	26	305	0	991	545	3.5	16	2.6	2660	172	0	90	29		11.1	
142-049-18CDD	0-240	06/16/65	23	0.48		138	38	873	24	336	0	775	975	0.7	4	1.9	3020	500	0	78	17		8.9	
142-049-22DDA	0-305	08/13/81	7.7	0.03	0.01	25	8.9	680	7.3	380	0	9.1	910	1	1	1.4	1840	99	0	93	30	3700		8
142-049-22DDD	228-234	07/06/92	17	0.55	0.02	38	15	470	4.8	350	0	2.5	640	0.5	12	0.9	1370	160	0	86	16		8.5	
142-049-22DDD	228-234	08/24/88	20	0.19	0.02	38	16	470	4.5	339	0	8.2	610	0.5	0.8	1	1340	160	0	86	16	2640	10	
142-049-22DDD	228-234	08/13/81	20	0.03	0.01	40	19	520	6	348	0	0.8	730	0.5	1	1.1	1510	180	0	86	17	3000		8
142-049-26BAA	0-125	06/16/65	26	0.14		91	10	244	10	308	0	156	299	0.4	1.6	0.4	991	270	18	65	6.5		9.4	
142-050-08AAB2	0-342	06/16/65	36	0.37		272	78	90	12	1190	0	48	192	0.2	0.9	0	1320	1000	25	16	1.2		8.3	
142-050-19BCC	0-120	06/16/65	25	1.4		98	8.1	737	15	652	0	213	847	0.6	13	2.2	2280	278	0	84	19		7.8	
142-050-35ADD	0-219	06/16/65	25	0.48		107	25	959	28	416	0	835	910	0.8	3.1	2.5	3100	370	29	84	21		7.8	
142-051-17DAA	0-411	06/16/65	5	0.4		32	8	1120	23	362	0	1200	776	2.9	4	3.3	3350	113	0	94	46		7.8	
142-051-18DCD	0-212	06/16/65	20	0.6		48	7.3	1010	18	336	0	1240	697	2.8	2.2	3.8	3220	150	0	93	36		8.3	
142-051-20DCD	0-160	06/16/65	24	0.08		58	17	980	11	312	0	1200	659	2.6	5.8	3	3110	216	0	90	29		13.3	
142-051-30CDD	0-136	06/16/65	25	0.17		85	9.2	130	9.7	280	0	217	75	0.4	0.5	0.39	690	250	21	52	3.6		8.9	
143-049-30CDD	0-460	04/27/65	4.8	1.4		15	5.5	1130	9.4	293	0	912	954	0.6	8.9	4.5	3190	60	0	97	63			
143-050-19ABA	0-80	05/12/65	22	0.13		74	27	3.7	2.8	311	0	48	0.5	0	0	0	331	294	39	3	0.1	380	8.3	
143-050-29DAA	0-370	04/27/65	22	0.82		135	34	974	30	315	0	979	930	0.7	14	2.5	3140	475	217	80	19		3.3	
143-051-18DAA	0-400	10/22/53		0.5		20	20	1180	16	295		1330	761	2.5	39			133		94				
143-051-18DAD	0-352	04/27/65	6.4	0.26		30	5.6	1150	23	322	0	1260	797	3.6	0	3.6	3440	98	0	95	50		6.7	

TABLE 4. Stable isotope and other selected data for ground-water samples from sites located in the West Fargo aquifer system study area

Location	Date Sampled (m/d/y)	Screened Interval (ft bls)	$d^{18}O$ (o/oo)	dDeuterium (o/oo)
136-48-31DDD	6/1/94	325-330	-18.9	-144
136-49-02ABB	12/9/93	138-143	-18.4	-134
136-49-03CCD	6/1/94	198-203	-20.6	-161
136-49-24CCC1	6/1/94	178-181	-18.6	-146
136-49-26BAA	6/1/94	93-98	-20.5	-160
137-49-12CCC	6/1/94	190-195	-21.6	-167
137-49-15BAA	12/9/93	198-203	-22.1	-169
137-49-18BBB	6/1/94	128-132	-19.6	-154
137-49-23DDD	12/9/93	238-243	-18.0	-139
137-49-25CCC	12/9/93	228-238	-18.7	-143
138-49-04CCC	12/8/93	178-181	-19.6	-149
138-49-04DDD	5/26/94	150-153	-22.4	-168
138-49-05BBA	5/25/94	258-263	-20.5	-151
138-49-06ABB4	6/1/94	248-253	-19.5	-144
138-49-06BBC	5/26/94	258-263	-17.7	-132
138-49-20CCC	5/26/94	150-155	-20.6	-159
138-49-27BAB	6/1/94	188-193	-22.4	-167
138-49-31DDD	6/1/94	270-275	-21.6	-168
139-49-02CCD4	6/1/94	237-242	-20.5	-153
139-49-04ABB	6/1/94	9-19	-13.0	-94
139-49-04ACB	6/1/94	9-19	-13.1	-102
139-49-17AAD	6/2/94	298-301	-14.1	-109
139-49-17AAD	10/5/94	298-301	-14.1	-108
139-49-21AAA3	9/29/94	244-249	-18.6	-141
139-49-28DDD	12/8/93	148-151	-21.4	-168
139-49-29DDD1	12/8/93	238-243	-20.1	-154
139-49-29DDD2	12/9/93	142-147	-20.3	-154
139-49-29DDD2	9/29/94	142-147	-22.6	-172
139-49-30DCC	9/29/94	165-170	-19.1	-143
139-50-12CCC	5/26/94	178-183	-19.4	-144
139-50-23AAA	5/26/94	148-151	-19.9	-144
140-49-30ADD2	12/8/93	198-208	-17.9	-135
140-49-34ABB2	5/26/94	163-168	-20.1	-149
140-49-34BBB	5/26/94	165-170	-20.1	-146
140-49-34CCCA	6/1/94	8-18	-11.9	-89
140-50-15DDDC1	12/8/93	298-303	-17.8	-136
140-50-15DDDC2	12/8/93	189-194	-17.9	-133
140-50-26CCC	5/26/94	218-223	-18.5	-134
140-50-27CCC	5/26/94	152-157	-16.0	-116
140-50-27CCC	9/29/94	152-157	-16.3	-126
140-50-36BAA	5/26/94	138-143	-9.1	-68
140-50-36BAA	9/29/94	138-143	-10.4	-81
140-50-36BBB	5/26/94	186-191	-15.7	-117
140-50-36BBB	9/29/94	186-191	-15.9	-121
141-49-03CCC	5/26/94	166-169	-20.9	-157
141-49-28BBB	5/26/94	205-208	-19.9	-145
141-49-30AAB	5/26/94	180-186	-9.1	-67
141-49-30AAB	9/29/94	180-186	-9.4	-72
141-49-32DCC1	12/8/93	240-246	-16.2	-122
141-50-09AAA2	5/26/94	250-280	-20.0	-147
141-50-23CCC1	12/8/93	278-283	-17.8	-135
141-50-23CCC2	12/8/93	130-135	-17.2	-131
141-50-23DDD	5/26/94	118-121	-19.2	-140
141-50-28AAA	5/26/94	278-283	-16.1	-122
141-50-28AAA	10/5/94	278-283	-15.8	-121

TABLE 5A. SOURCES OF WATER USE DATA TABULATED IN THE SUBSEQUENT TABLES.

SOURCES OF DATA	WATER USER	WATER SOURCE	TIME PERIOD	DATA FREQUENCY	REMARKS
BYERS, et al (1946)	Fargo	Red River	1912-1941	annual	
	Fargo	Red River	1935-1941	monthly	
	Fargo	Fargo aquifer	1935-1941	monthly	
	Moorhead	ground water	1910-1934	annual	based on multiple year estimates
	Moorhead	ground water	1935-1941	monthly	
DENNIS, et al (1949)	Moorhead	Red River	1903-1909	annual	1906 estimated
	Moorhead	Red River & ground water	1910-1918	annual	big decrease in 1914 (power plant taking from river)
	Moorhead	ground water	1919-1947	annual	1946-47 estimated
	Fargo	Fargo aquifer	1938-1947	annual	no use in 1944-45
	West Fargo	West Fargo North aquifer	1937-1947	annual	
	Stockyards	West Fargo North aquifer	1936-1947	annual	
	Fairmont Creamery	ground water	1924-1947	annual	based on multiple year estimates
	Moorhead Laundery	ground water	1906-1947	annual	based on multiple year estimates
KLAUSING, part III (1968)	Union stockyard	West Fargo North aquifer	1965	annual	
	Siouxland Beef	West Fargo North aquifer	1965	annual	
	SW Fargo	West Fargo North aquifer	1965	annual	
	Village West Fargo	West Fargo North aquifer	1965	annual	
	Goldena Mills	West Fargo North aquifer	1965	annual	
KOTTA (personal comm.)	Comstock	ground water	1981-1993	annual	Arlen R. Kotta, City Councilman, Comstock
LOFGREN (personal comm.)	Glyndon	ground water	1986-1995	annual	Scott Lofgren, Maintenance Supervisor, Glyndon
MCLAIN (personal comm.)	Moorhead	Moorhead East aquifer	1952-1995	monthly	Cliff McLain, Public Service Dept., Moorhead
	Moorhead	Red River	1961-1995	monthly	
	Moorhead	Buffalo aquifer, south field	1968-1995	monthly	
	Moorhead	Buffalo aquifer, north field	1989-1995	monthly	
MN DNR water use records	Minn permitted water users	many	1978-1995	annual	data more reliable after 1988
NDSWC water use records	ND permitted water users	many	1965-1995	annual & monthly	
WELTON (personal comm.)	Fargo	Red River	1946-1965	annual	Bob Welton, Fargo City Engineer, Fargo
WOLF (1981)	Moorhead	Buffalo aquifer, south field	1948-1978	annual	from bar graph (figure 23)

TABLE 5B. MUNICIPAL GROUND-WATER USE IN THE MINNESOTA PORTION OF THE STUDY AREA, NOT INCLUDING MOORHEAD

city	Comstock			Dilworth							Georgetown			Glyndon			Perley			Sabin			Wolverton				Minnesota municipal without Moorhead
T-R-S	137-48-21			139-48-2, 11 & 12							142-48-30			139-47-11			143-48 & 49			138-47-7			136-48-28				
POD	CDCAAA	DCB		2DDC3	2DDC4	2DDC1	11ABAD	12ABD1	12ABD2		DDA1	DDA2		ABCBCD	ABCBC2		30BAD	25AAC		DDADAB	DDADA2		CBA	?	?		
well #	1	2	TOTAL	5	6	3A	4	7	8	TOTAL	1	2	TOTAL	1	2	TOTAL	2	3	TOTAL	1	2	TOTAL	1	2	3	TOTAL	TOTAL
YEAR	(Mgal)	(Mgal)	(Mgal)	(Mgal)	(Mgal)	(Mgal)	(Mgal)	(Mgal)	(Mgal)	(Mgal)	(Mgal)	(Mgal)	(Mgal)	(Mgal)	(Mgal)	(Mgal)	(Mgal)	(Mgal)	(Mgal)	(Mgal)	(Mgal)	(Mgal)	(Mgal)	(Mgal)	(Mgal)	(Mgal)	(Mgal)	(Mgal)
1960				well		well	new										well			new					well		
1961				origin		origin	well										origin			well					origin		
1962				not		not											not								not		
1963				known		known											known								known		
1964																											
1965																											
1966																											
1967																											
1968	new																										
1969	well													new													
1970														well				new									
1971																		well									
1972																											
1973		new																									
1974		well																									
1975																											
1976																											
1977																											
1978				8.4			62.6			71.0					new												
1979	0.3		0.3	13.7	1.3		58.7			73.7					well							21.9					92.9
1980	1.8	1.3	3.1	12.4	61.0		1.9			75.4																	74.1
1981			3.0		68.7		1.0			69.6													2.7	5.3		8.0	86.4
1982			3.2	2.0	71.4	0.2				73.6																7.4	80.0
1983			3.0	1.0	73.6	0.3				74.9										27.7		27.7	3.5	2.0		5.5	109.9
1984	1.8	1.8	3.6	1.0	74.2	0.0				75.2													3.5	2.2		5.7	83.6
1985	1.6	1.2	2.7	1.8	59.2	0.0		5.4	4.6	71.0	2.0		2.0	4.2	28.2	32.4	0.0	5.2	5.2	17.0		17.0	3.6	2.3		6.0	139.3
1986	1.9	0.5	2.5	14.0	20.2	0.0		16.4	17.5	68.1	7.2		7.2	2.7	28.9	31.5		5.9	5.9	13.6		13.6	2.6	3.8		6.4	133.2
1987	1.6	1.2	2.7	23.7	29.5	0.3		11.3	11.1	75.9	3.3		3.3	0.5	59.8	60.3		4.8	4.8	33.0		33.0		5.9		5.9	181.9
1988	2.0	2.0	4.1	10.0	43.6	0.3		15.5	12.7	82.1	3.9		3.9	0.3	36.8	37.1		6.1	6.1	26.9		26.9	0.3	6.6		6.9	158.8
1989	1.6	1.1	2.8	3.9	23.7	1.4		28.3	25.8	83.1	2.7		2.7	1.3	38.5	38.5	0.1	5.9	6.0	22.2		22.2				0.0	156.8
1990	1.6	1.1	2.7	6.4	41.4	0.7		14.6	13.8	76.9	2.6	new	2.6	3.3	38.7	40.0	0.1	4.7	4.8	20.9		20.9	6.4			6.4	160.7
1991	1.5	1.0	2.5	3.4	48.4	0.5		12.6	12.7	77.6	2.4	well	2.4	3.3	30.0	33.3	0.1	4.4	4.4	2.1	16.2	18.3	5.2			5.2	143.4
1992	1.3	1.0	2.4	0.4	48.0	0.2		14.4	14.7	77.7	2.5		2.5		28.9	28.9	0.1	4.5	4.6	18.1		18.1	0.0	6.3		6.3	140.4
1993	1.5	1.1	2.6	1.4	47.1	0.0		15.6	15.5	79.6	2.7		2.7	0.3	29.3	29.6		4.5	4.5	11.5		11.5		0.0	5.5	5.5	133.7
1994	1.5	1.2	2.7	0.6	54.0	0.3		16.7	16.6	88.2	3.1		3.1		30.7	30.7	1.4	2.2	3.6	12.9		12.9		0.0	4.9	4.9	136.9
1995	1.6	1.1	2.7	2.8	52.5	3.1		18.8	19.0	96.2	3.2		3.2	16.9	32.1	49.0	1.6	4.0	5.6	11.1	1.7	12.7		0.0	5.5	5.5	166.8
														22.4	7.9	30.3	1.6	3.9	5.4	9.5	8.7	18.2			4.8	4.8	160.8

TABLE 5C. MUNICIPAL GROUND-WATER USE IN THE NORTH DAKOTA PORTION OF THE STUDY AREA, NOT INCLUDING FARGO & WEST FARGO

com-munity	Argus-ville	Cass Rural Water*	Chrisan water users	Christine	Country Acres	Daven-port	Fradet's Sub-division	Gardner	Harwood	Horace	Kindred	Lake Shure Estates	Mapleton	Oxbow	Selkirk Settle-ment	Walcott	Woodland Acres	N Dakota municipal without Fargo and West Fargo TOTAL
Permit #	1730	2293	1791	1755	3090	1899	3121	1725	1908	3602	2886	2796	1207	4112	3937	1903	2934	
T-R	141-49	137-49	138-48	136-49	138-49	137-51	138-49	142-50	141-49	138-49	137-50	140-49	139-50	137-49	138-49	136-50	138-49	
PODs	6CD	3B	7CB	26D	30A & D	1BB	18DCB	2DA	33C & D	19A & 20B	8CB	9CB	6BB	24A	1D	35CCB	6DA	
YEAR	(Mgal)	(Mgal)	(Mgal)	(Mgal)	(Mgal)	(Mgal)	(Mgal)	(Mgal)	(Mgal)	(Mgal)	(Mgal)	(Mgal)	(Mgal)	(Mgal)	(Mgal)	(Mgal)	(Mgal)	(Mgal)
1965	unknown		unknown	unknown	unknown	unknown	unknown	unknown		new well			3.3			1943 WP		3.3
1966	well		well	well	well	well	well	well		in 1955								0.0
1967	origin		origin	origin	origin	origin	origin	origin										0.0
1968						1943 WP							5.7					5.7
1969													3.4					3.4
1970	new WP							new WP					3.1					3.1
1971			new WP	new WP									2.5					2.5
1972								1.6	new well				1.7			new well		3.3
1973	2.3		0.6					1.6					4.6					9.1
1974			2.1			2.2		2.5					4.6			3.6		15.0
1975	2.2		1.8			2.9		2.5					4.4	new well		3.6		17.5
1976	4.1	1.8				3.5							5.4			3.6		18.4
1977		73.0				3.6					new well	0.9	0.6			3.6		81.8
1978	3.4	52.8	3.5			4.4	0.7	2.4			15.5					4.5		87.2
1979		62.4			0.1	3.1		1.9	13.0		23.3	0.0				4.5	0.2	108.4
1980	3.6	72.2	2.2		0.4	3.5	1.0	2.4	15.6			0.0				4.5	0.3	105.6
1981	3.8	68.0			0.3	3.8	2.2		13.5		15.7					3.9	1.2	112.4
1982	3.4	81.3			0.4	5.4	3.1	2.1	17.9		16.7		3.3			4.7		138.2
1983		87.1		3.8	0.4	2.3	1.0	2.0	21.3							5.1	3.6	126.6
1984		105.1	0.9	1.8	0.5	4.7	0.9	2.3	25.2	14.0	17.7					4.7	5.2	183.0
1985	3.9	100.2	1.8	2.4	0.4	4.8	0.8	2.4	15.5	14.7	17.2	1.3			new well	5.3	2.5	173.3
1986	3.7	113.6	0.5	4.4	0.4	4.9	0.9	2.3	22.0	19.0	15.4	1.3				4.9	2.3	195.7
1987	4.6	115.9	0.5	5.4	0.6	5.1	0.9	2.8	14.3	14.9	18.7	1.3				5.8	2.5	193.4
1988	4.3	114.4	0.4	7.3	0.6	1.8	1.0	2.7	18.9	19.5	21.2	1.3			1.4	6.2	3.8	204.9
1989	4.2	118.1	0.4	4.0	0.7	1.7	0.9	2.3	17.9	18.8	21.0	1.3		2.8	1.7	6.3	2.5	204.5
1990	3.5	116.4	2.2	8.8	0.8	5.5	1.0	2.0	15.3	16.8	18.8	1.3		10.2	1.5	6.1	2.2	212.5
1991	0.5	124.7	2.0	9.5	0.6	3.4	1.1	2.7	16.2	17.5	17.8	1.9			1.4	6.0	2.1	207.3
1992		120.8	2.0	6.5	0.7	5.4	1.3	2.4	15.4	18.8	9.6	1.9		9.6	1.7	5.9	2.0	204.1
1993		128.5	2.0	6.5	0.7	5.7	1.3		13.5	20.0		1.9		10.2	2.5	5.7	2.1	200.6
1994		140.0	2.0	6.7	0.7	2.1	1.6		15.3	24.5		1.7		11.2	3.7	6.4	2.1	218.1
1995	0.1	141.7		7.0	0.7		1.7		13.8	18.4		1.7		11.3	3.0	6.0	2.0	207.7

* See Table 7B for a listing of the communities in the study area served by Cass Rural Water Users, Inc.

TABLE 5D1. WATER USE FOR MOORHEAD FROM VARIOUS SOURCES

source of water YEAR	RIVER (Mgal)	COMBINED RIVER/GW (Mgal)	MOORHEAD WEST (Mgal)	COMBINED MOORHEAD EAST & WEST (Mgal)	MOORHEAD EAST (Mgal)	BUFFALO SOUTH (Mgal)	BUFFALO NORTH (Mgal)	COMBINED TOTAL (Mgal)	METERED TOTAL (Mgal)	TOTAL GROUND WATER (Mgal)
	river is sole source from 1878 to 1909									
1903	96.8							96.8		
1904	90.2							90.2		
1905	73.0							73.0		
1906	100.0							100.0		
1907	124.0							124.0		
1908	112.5							112.5		
1909	122.5							122.5		
1910	140.8	160.8	20.0					160.8		20.0
1911	114.1	139.1	25.0					139.1		25.0
1912	126.3	151.3	25.0					151.3		25.0
1913	126.0	156.0	30.0					156.0		30.0
1914	54.5	94.5	40.0					94.5		40.0
1915	21.3	81.3	60.0					81.3		60.0
1916	0.0	78.3	79.0					79.0		79.0
1917	0.0	73.6	75.0					75.0		75.0
1918	0.3	68.3	68.0					68.3		68.0
1919			87.1					87.1		87.1
1920			91.8					91.8		91.8
1921			110.5					110.5		110.5
1922			106.8					106.8		106.8
1923				94.5				94.5		94.5
1924				100.9				100.9		100.9
1925				108.0				108.0		108.0
1926				112.2				112.2		112.2
1927				117.3				117.3		117.3
1928				123.4				123.4		123.4
1929				130.6				130.6		130.6
1930				143.9				143.9		143.9
1931				144.9				144.9		144.9
1932				177.9				177.9		177.9
1933				171.9				171.9		171.9
1934				169.0				169.0		169.0
1935				162.4				162.4		162.4
1936				212.8				212.8		212.8
1937				204.4				204.4		204.4
1938				215.0				215.0		215.0
1939				249.9				249.9		249.9
1940				257.1				257.1		257.1
1941				271.8				271.8		271.8
1942				284.6				284.6		284.6
1943				296.7				296.7		296.7
1944				285.7				285.7		285.7
1945				336.2				336.2		336.2
1946				450.0				450.0		450.0
1947				470.0				470.0		470.0
1948						300.0		300.0		300.0

TABLE 5D1. WATER USE FOR MOORHEAD FROM VARIOUS SOURCES

source of water YEAR	RIVER (Mgal)	COMBINED RIVER/GW (Mgal)	MOORHEAD WEST (Mgal)	COMBINED MOORHEAD EAST & WEST (Mgal)	MOORHEAD EAST (Mgal)	BUFFALO SOUTH (Mgal)	BUFFALO NORTH (Mgal)		COMBINED TOTAL (Mgal)	METERED TOTAL (Mgal)	TOTAL GROUND WATER (Mgal)
1949						360.0			360.0		360.0
1950						360.0			360.0		360.0
1951						370.0			370.0		370.0
1952					89.6	360.0			449.6	553.4	449.6
1953					85.0	350.0			435.0	545.0	435.0
1954					98.9	400.0			498.9	619.1	498.9
1955					108.3	430.0			538.3	691.5	538.3
1956					106.2	430.0			536.2	701.9	536.2
1957					86.7	350.0			436.7	551.9	436.7
1958					94.4	390.0			484.4	534.8	484.4
1959					112.2	460.0			572.2	695.2	572.2
1960					106.6	425.0			531.6	677.7	531.6
1961	296.5				62.0	325.0			683.5	767.3	387.0
1962	271.8				39.1	350.0			661.0	668.0	389.1
1963	300.2				85.2	315.0			700.4	763.0	400.2
1964	487.0				43.6	220.0			750.7	847.8	263.6
1965	369.5				84.1	275.0			728.6	748.7	359.1
1966	360.5				112.3	285.0			757.8	803.2	397.3
1967	527.1				150.4	230.0			907.4	940.7	380.4
1968	531.4				130.2	177.2			838.9	911.8	307.5
1969	587.7				142.3	231.1			961.1	980.1	373.4
1970	680.4				104.3	281.5			1066.2	1090.5	385.7
1971	575.6				41.9	323.6			941.1	1000.5	365.5
1972	531.9				96.5	334.7			963.1	1002.3	431.2
1973	509.9				150.8	314.2			974.8	1018.5	465.0
1974	488.9				141.3	264.4			894.6	981.4	405.7
1975	401.4				177.0	312.4			890.8	953.6	489.4
1976	616.4				199.5	284.2			1100.1	1275.9	483.8
1977	481.2				229.2	306.6			1016.9	1132.7	535.7
1978	530.0				180.8	351.9			1062.7	1157.6	532.7
1979	641.9				230.6	444.5			1317.0	1375.9	675.1
1980	865.2				192.4	515.7			1573.3	1543.9	708.1
1981	896.4				125.0	397.2			1418.5	1418.9	522.2
1982	997.7				155.2	430.3			1583.3	1534.0	585.5
1983	966.6				143.7	407.0			1517.2	1530.5	550.7
1984	886.7				204.8	515.1			1606.6	1575.5	719.9
1985	937.5				142.3	408.1			1487.9	1511.0	550.4
1986	851.5				195.3	447.2			1494.0	1521.5	642.4
1987	936.1				139.6	516.8			1592.5	1614.3	656.4
1988	1047.6				186.6	611.6			1845.8	1822.8	798.2
1989	1062.3				115.4	355.2	244.5		1777.3	1719.5	715.1
1990	918.2				123.1	293.3	195.5		1530.1	1510.7	611.9
1991	891.8				110.9	272.7	238.7		1514.1	1479.6	622.3
1992	831.5				102.5	295.5	221.4		1450.9	1423.9	619.4
1993	790.2				93.0	282.5	191.9		1357.6	1381.9	567.4
1994	724.4				125.1	299.9	255.8		1405.2	1487.6	680.8
1995	1176.9				85.9	164.1	208.4		1635.2	1397.5	458.3

TABLE 5D2. GROUND-WATER USE FROM MOORHEAD'S AQUIFERS FROM VARIOUS POINTS OF DIVERSION

aquifer	MOORHEAD WEST AQUIFER				MOORHEAD EAST AQUIFER		BUFFALO SOUTH FIELD				BUFFALO NORTH FIELD		
T-R	139-48	139-48	139-48		139-48	139-48	139-47	139-47	139-47		140-47	140-47	
POD	5DDD1	5DDD2	5DDD3		4DCC1&2	4DCC3, 4 & 5	5DCC1	5DCC2	5DCC3		19ABB	18DCB	
well #	1	2	3	TOTAL*	4 & 5	6, 6A & 6B	8	9	10	TOTAL	1	2	TOTAL
YEAR	(Mgal)	(Mgal)	(Mgal)	(Mgal)	(Mgal)	(Mgal)	(Mgal)	(Mgal)	(Mgal)	(Mgal)	(Mgal)	(Mgal)	(Mgal)
1903													
1904													
1905													
1906													
1907													
1908													
1909													
1910	in use												
1911	in use												
1912	in use												
1913	in use												
1914	in use												
1915	in use												
1916	in use												
1917	in use												
1918	in use												
1919	in use												
1920	in use												
1921	in use	in use											
1922	in use	in use	in use										
1923	in use	in use	in use	85									
1924	in use	in use	in use	85									
1925	in use	in use	in use	85									
1926	in use	in use	in use	85									
1927	in use	in use	in use	85	4 in use								
1928	in use	in use	in use	85									
1929	in use	in use	in use	85									
1930	in use	in use	in use	85	5 in use								
1931	in use	in use	in use	85									
1932	in use	in use	in use	85		6 in use							
1933	in use	in use	in use	85									
1934	in use	in use	in use	85									
1935	in use	in use	in use	85									
1936	in use	in use	in use	85									
1937	in use	in use	in use	85									
1938	in use	in use	in use	85									
1939	in use	in use	in use	85									
1940	in use	in use	in use	85									
1941	in use	in use	in use	85									
1942	in use	in use	in use	100									
1943	in use	in use	in use	100									
1944	in use	in use	in use	100									
1945	in use	in use	in use	100									
1946	in use	in use	in use	100									
1947		in use	in use	100									
1948													
1949										300.0			
										360.0			

TABLE 5D2. GROUND-WATER USE FROM MOORHEAD'S AQUIFERS FROM VARIOUS POINTS OF DIVERSION

aquifer	MOORHEAD WEST AQUIFER				MOORHEAD EAST AQUIFER		BUFFALO SOUTH FIELD				BUFFALO NORTH FIELD		
T-R	139-48	139-48	139-48		139-48	139-48	139-47	139-47	139-47		140-47	140-47	
POD	5DDD1	5DDD2	5DDD3		4DCC1&2	4DCC3, 4 & 5	5DCC1	5DCC2	5DCC3		19ABB	18DCB	
well #	1	2	3	TOTAL*	4 & 5	6, 6A & 6B	8	9	10	TOTAL	1	2	TOTAL
YEAR	(Mgal)	(Mgal)	(Mgal)	(Mgal)	(Mgal)	(Mgal)	(Mgal)	(Mgal)	(Mgal)	(Mgal)	(Mgal)	(Mgal)	(Mgal)
1950										360.0			
1951										370.0			
1952						89.6				360.0			
1953						85.0				350.0			
1954						98.9				400.0			
1955						108.3				430.0			
1956						106.2				430.0			
1957						86.7				350.0			
1958						94.4				390.0			
1959						112 2				460.0			
1960						106 6				425.0			
1961						62 0				325.0			
1962						39 1				350.0			
1963						85.2				315.0			
1964						43.6				220.0			
1965						84.1				275.0			
1966						112.3				285.0			
1967						150.4				230.0			
1968						130.2				177.2			
1969						142.3				231.1			
1970						104.3				281.5			
1971						41.9				323.6			
1972						96.5				334.7			
1973						150.8				314.2			
1974						141.3				264.4			
1975						177.0				312.4			
1976						199.5				284.2			
1977						229.2				306.6			
1978						180.8				351.9			
1979						230.6				444.5			
1980						192.4				515.7			
1981						125.0				397.2			
1982						155.2				430.3			
1983						143.7	0.4	0.7	405.9	407.0			
1984						204.8			515.1	515.1			
1985						142.3	408.1			408.1			
1986						195.3		447.2		447.2			
1987						139.6	516.8			516.8			
1988						186.6		611.6		611.6	2.0	2.0	4.0
1989						115.4	355.2			355.2	116.3	128.2	244.5
1990						123.1	293.3			293.3	87.5	107.9	195.5
1991						110.9	272.7			272.7	135.4	103.3	238.7
1992						102.5	146.6	115.1	33.8	295.5	124.5	96.9	221.4
1993						93.0	124.8	65.2	92.6	282.5	126.9	65.0	191.9
1994						125.1	74.9	128.3	96.7	299.9	143.4	112.4	255.8
1995						85.9	93.1	67.1	3.9	164.1	104.0	60.7	164.7

TABLE 5E1. MUNICIPAL WATER USE FOR THE CITY OF FARGO

water source YEAR	Red River (Mgal)	YEAR	Red River (Mgal)	Fargo Aquifer (Mgal)	YEAR	Red River (Mgal)	YEAR	Red River (Mgal)
1912	224.9	1933	906.5		1954	1667.9	1975	2878.0
1913	870.7	1934	1036.5		1955	1780.6	1976	5425.4
1914	778.4	1935	1055.1		1956	1826.6	1977	5022.9
1915	726.5	1936	1244.5		1957	1754.4	1978	3462.5
1916	712.0	1937	1077.6		1958	1880.9	1979	3643.5
1917	790.5	1938	1169.0	23.5	1959	2039.8	1980	3863.4
1918	790.9	1939	1215.0	18.2	1960	2136.6	1981	3529.6
1919	838.4	1940	938.6	13.9	1961	2118.2	1982	3932.5
1920	851.7	1941	943.0	51.1	1962	1858.7	1983	3803.0
1921	867.6	1942		8.8	1963	2196.1	1984	4174.7
1922	910.5	1943		2.1	1964	2339.6	1985	3858.5
1923	888.5	1944		0.0	1965	2271.3	1986	3957.8
1924	825.1	1945		0.0	1966	2329.0	1987	4450.3
1925	762.1	1946	1332.5	9.3	1967	2592.2	1988	4845.6
1926	825.7	1947	1506.2	13.9	1968	2424.8	1989	4527.5
1927	814.8	1948	1675.8	19.0	1969	2544.4	1990	4477.7
1928	888.0	1949	1706.2	10.7	1970	2662.0	1991	4168.3
1929	1075.4	1950	1738.5	6.3	1971	2290.4	1992	3981.7
1930	1030.1	1951	1596.2	8.7	1972	2738.6	1993	4010.2
1931	958.9	1952	1857.5	1.3	1973	2900.0	1994	4597.3
1932	889.9	1953	1848.1		1974	2969.4	1995	4031.7

TABLE 5E2. MUNICIPAL GROUND-WATER USE FOR THE CITY OF FARGO

POD	Ground-water use from 139-049-01CBD2									
month	Mar	Apr	May	Jun	Jul	Aug	Sep	Oct		
YEAR	(Mgal)	(Mgal)	(Mgal)	(Mgal)	(Mgal)	(Mgal)	(Mgal)	(Mgal)		
1938		5.1	9.1	8.5	0.9					
1939		4.4	7.1	6.7						
1940		4.6	6.1	3.2						
1941	11.1	12.9	13.5	13.6						
1942										
1943										
1944										
1945										
1946						7.9	1.4			
1947					5.2	8.7				
1948				1.9	3.7	2.4	7.2	3.8		
1949						4.9	4.8	1.0		
1950				0.2	2.8	3.4				
1951			1.2		1.3	3.7	2.5			
1952				0.1		0.6		0.6		

TABLE 5F. WEST FARGO WATER USE BY POINTS OF DIVERSION

permit #	921B	921B	921B	1900	3585	3585	
T-R	139-49	139-49	139-49	139-49	139-49	139-49	
POD	7ABB	8BDA	8DCD	9BBA	16BDC	16CDD2	TOTAL
YEAR	(Mgal)	(Mgal)	(Mgal)	(Mgal)	(Mgal)	(Mgal)	(Mgal)
1937							0.5
1938							1.1
1939							1.2
1940							1.3
1941							1.4
1942							1.5
1943							1.2
1944							1.2
1945							1.6
1946							2.1
1947							2.6
1948							
1949							
1950							
1951							
1952							
1953							
1954		new well					
1955							
1956							
1957							
1958							
1959							
1960	new well						
1961	new WP	new WP	new WP				
1962							
1963							
1964							
1965							83.4
1966	78.2	31.3					109.5
1967	130.4	52.1					182.5
1968	71.7	28.7					100.4
1969	90.6	18.9					109.5
1970	128.4	26.7					155.1
1971	98.2	20.5					118.6
1972	78.5	35.5		new well			114.0
1973	119.4	47.8		new WP			167.2
1974	106.3	0.0		124.0			230.4
1975	128.6	0.0		150.0			278.6
1976	67.6	0.0	27.0	175.7			270.3
1977	67.9	0.0	27.2	176.6			271.6
1978	68.0	0.0	27.2	176.9			272.1
1979	20.5	0.0	60.3	207.8			288.6
1980	30.7	28.4	99.0	179.7			337.8
1981	26.0	32.1	78.0	169.8			306.0
1982	22.4	16.7	266.4	28.4	new WP		333.8
1983	15.1	7.8	222.8	13.4	91.7		350.8
1984	4.0	0.0	98.0	15.5	271.6		389.2
1985	1.4	0.7	118.6	15.9	223.9		360.6
1986	0.4	0.0	121.3	12.6	216.3		350.6
1987	3.7	0.8	136.3	15.9	251.4		408.2
1988	17.1	0.0	196.2	12.6	276.7		502.5
1989	4.5	0.0	230.9	10.6	197.2		443.1
1990	0.0	0.0	188.5	7.2	198.3		394.0
1991	0.0	0.0	97.7	13.7	240.2		351.5
1992	0.0	0.0	116.5	11.4	235.1	new well	363.0
1993	0.0	0.0	138.1	3.1	246.9	20.1	408.2
1994	0.0	0.0	125.4	11.6	189.6	115.5	442.1
1995	0.0	0.0	245.1	10.9	120.0	88.3	464.3

TABLE 5G. MINNESOTA NONMUNICIPAL (IRRIGATION) GROUND-WATER USE IN THE STUDY AREA

POINT OF DIVERSION	PERMIT NUMBER	1984 (Mgal)	1985 (Mgal)	1986 (Mgal)	1987 (Mgal)	1988 (Mgal)	1989 (Mgal)	1990 (Mgal)	1991 (Mgal)	1992 (Mgal)	1993 (Mgal)	1994 (Mgal)	1995 (Mgal)
136-47-22C	734126		10.6	0.0	19.4	24.9	23.6	34.1	20.2	17.9	11.3	16.4	
136-47-22C	734126		0.0	0.0	7.1	9.9	9.8	6.6	6.3	8.7	0.0	4.3	
136-47-22A	771534		0.0	0.0	0.0	0.0	0.0	7.6	10.0	4.8	6.6	6.5	
136-47-22C	771539		13.0	0.0	18.8	40.5	29.5	41.9	28.2	31.1	7.2	48.7	
136-47-26BD	771525	47.6	1.9	0.0	3.3	40.6	60.7	48.9	28.8	7.7	0.0	4.6	6.4
136-47-28AAC	781316	30.5	8.1	0.0	17.9	35.8	22.3	26.8	13.6	10.8	9.7	12.8	15.8
136-47-31DAD	751039	17.7	0.6	0.0	17.9		24.3	22.7	18.5	13.3	1.9	17.2	15.9
136-47-32BDBC	771400	17.1	0.0	0.0	3.0	44.2	68.4	60.0	28.5	0.0	0.0	8.7	8.3
136-47-32BDBC	771400	0.0	0.0	0.0	0.0	0.0	0.0		0.0	10.0	0.0	0.0	
136-47-34DAB	710204						7.5	20.9	11.5	11.5			
137-47-17BCD	911254								13.5	5.0	0.0	9.8	11.9
138-47-09CBD	761503	1.2	0.0	0.0	0.0	9.0	5.2	0.0		0.0	0.0		
138-47-16B	761530	4.1	0.0	0.0	0.0	10.4	5.2	0.0		0.0	0.0		
138-47-17D	761472	0.8	3.8	0.0	3.1	6.2	7.5	0.0	5.0	0.0	0.0		1.6
138-47-17A	761531	3.3	0.0	0.0	0.0	6.5	0.0	0.0		0.0	0.0		
138-47-29D	680671	0.0	3.0	0.0	0.0	0.0	10.1	6.5	0.0	0.0	0.0		
138-47-32BDC	901278								14.2	7.2	0.0	2.4	9.2
139-47-01B	680263	0.0	0.0	0.0	0.0	0.1	0.1	0.0	0.0	0.0	0.0		
139-47-05BDC	771222	0.0	0.0	0.0	0.0	0.0	0.0	0.0	0.0	0.0	0.0	0.0	
139-47-08CAC	791123	67.5	0.0	0.0	11.8	45.7	21.8	22.4	8.4	29.0	0.0	38.5	36.3
139-47-10ABB	911200								0.5	0.5	0.0	0.0	
139-47-16CAA	811178	24.6	0.0	0.0	20.3	31.8	9.3	17.1	0.0	6.5	0.0		
139-47-20CACC	771077	33.7	0.0	0.0	53.8	86.4	121.2	55.6	47.0	0.0	0.0	8.3	9.7
139-47-29C	771589						55.3	36.5	3.2	0.0	0.0		
139-47-29D	771590						76.0	60.0	32.0	0.0	0.0	9.7	12.6
139-47-32BDD	771238	25.9	0.0	0.0	0.0	121.1		82.5	38.8	0.0	0.0	10.2	6.6
139-47-32BCD	771097	48.2	0.3	0.0	7.9	46.4	0.3	31.3	51.3	17.1	0.0	6.2	11.8
TOTAL		322.2	41.3	0.0	184.3	559.5	558.1	581.4	379.5	181.1	36.7	204.3	146.1

TABLE 5H. NORTH DAKOTA NONMUNICIPAL GROUND WATER USE

NAME	Federal Beef Processors	Central Livestock	Industrial Molasses Corp.	Fargo Park District	Fargo Country Club	Cargill	Cass Clay Creameries	Adams Investments	
PERMIT	1117	1298P	1509	2417	2701	3170	3457	3649	
T-R	139-49	139-49	139-50	139-49	139-48	139-49	139-49	139-49	
POD	6BD	6AC	6AB	14C & D	19	5B	1CC	22D	TOTAL
YEAR	(Mgal)	(Mgal)	(Mgal)	(Mgal)	(Mgal)	(Mgal)	(Mgal)	(Mgal)	(Mgal)
1936		8.5							8.5
1937		14.5							14.5
1938		20.5							20.5
1939		29.3							29.3
1940		31.6							31.6
1941		37.7							37.7
1942		52.7							52.7
1943		63.1							63.1
1944		61.3							61.3
1945		81.1							81.1
1946		74.1							74.1
1947		71.8							71.8
	1960 well						1956 well		
1948-64	----------	no water use records for any of these permits for this time period							----------
	1963 WP								
1965	219.0	552.4							771.4
1966	143.0								143.0
1967		364.9	new WP						364.9
1968	182.5	328.4	unknown						511.0
1969	262.8	277.4	well						540.2
1970	219.0	255.5	origin						474.5
1971	199.9	255.5							455.4
1972	162.8	237.2	3.3						403.3
1973	102.6	292.0	4.4						399.0
1974	264.0	292.0	4.4						560.4
1975	246.4	135.0	1.5	new wells	new well				382.8
1976	273.8	119.1		new WP					392.9
1977		110.1	0.9	1.7	0.0				112.8
1978	281.8	92.4		5.6	0.0				379.9
1979		77.2		2.9	0.0	10.7			90.7
1980	102.9	29.9		1.0	0.0	36.9			170.6
1981	164.3	12.5		3.0	0.1	38.2	new WP		218.1
1982	149.4	12.7			0.0	32.5			194.5
1983	150.0	11.7			0.0	43.7	57.9		263.3
1984	166.0	15.5			0.9	38.9	43.3	0.5	265.2
1985	141.7	14.9		0.1	1.1	37.7	54.9	1.1	251.6
1986	113.0	15.3			3.5	35.3	32.0	0.7	199.8
1987	32.9	14.0			0.0	31.8	49.2	1.4	129.3
1988	260.0	117.5			1.6	49.6	45.6	1.5	475.7
1989	260.0	28.0			0.1	38.3	46.2	1.4	374.0
1990	168.0	14.8			0.0	36.8	40.0	2.2	261.9
1991	168.0	11.2			0.1	33.6	35.0	1.7	249.6
1992	176.0	13.7			1.9	49.0	36.0	2.4	279.0
1993	218.8	14.1			9.7	46.5	34.6	3.1	326.8
1994	229.1	10.3			4.8	42.9	34.6	4.4	326.0
1995	173.5	12.6			6.3	52.8	33.7	4.2	283.1

TABLE 5I. SUMMARY OF WATER USE FROM VARIOUS SOURCES.

Aquifer or River YEAR	Buffalo aquifer (Mgal)	Dilworth & East Dilworth aquifers (Mgal)	East & West Moorhead aquifers (Mgal)	Fargo aquifer (Mgal)	Horace aquifer (Mgal)	Red River (Mgal)	undefined & other aquifers (Mgal)	West Fargo North aquifer (Mgal)	West Fargo South aquifer (Mgal)	STUDY AREA TOTAL aquifers (Mgal)	STUDY AREA TOTAL all sources (Mgal)
1903						96.8				0.0	96.8
1904						90.2				0.0	90.2
1905						73.0				0.0	73.0
1906			3.0			100.0				3.0	106.0
1907			3.0			124.0				3.0	130.0
1908			3.0			112.5				3.0	118.5
1909			3.0			122.5				3.0	128.5
1910			23.0			141.8				23.0	187.8
1911			28.0			114.1				28.0	170.1
1912			28.0			351.3				28.0	407.3
1913			33.0			996.7				33.0	1062.7
1914			43.0			833.0				43.0	919.0
1915			63.0			747.8				63.0	873.8
1916			82.0			712.0				82.0	876.0
1917			78.0			790.5				78.0	946.5
1918			71.0			791.3				71.0	933.3
1919			90.0			838.4				90.0	1018.4
1920			95.0			851.7				95.0	1041.7
1921			114.0			867.6				114.0	1095.6
1922			110.0			910.5				110.0	1130.5
1923			98.0			888.5				98.0	1084.5
1924			154.0			825.1				154.0	1133.1
1925			196.0			762.1				196.0	1154.1
1926			200.0			825.7				200.0	1225.7
1927			205.0			814.8				205.0	1224.8
1928			211.0			888.0				211.0	1310.0
1929			219.0			1075.4				219.0	1513.4
1930			232.0			1030.1				232.0	1494.1
1931			233.0			958.9				233.0	1424.9
1932			266.0			889.9				266.0	1421.9
1933			260.0			906.5				260.0	1426.5
1934			257.0			1036.5				257.0	1550.5
1935			250.0			1055.1				250.0	1555.1
1936			301.0			1244.5		26.0		327.0	1898.5
1937			292.0			1077.6		45.0		337.0	1751.6
1938			304.0	23.5		1169.0		64.0		391.5	1952.0
1939			339.0	18.2		1215.0		91.2		448.4	2111.7
1940			346.0	13.9		938.6		98.4		458.3	1855.3
1941			361.0	51.1		943.0		117.2		529.3	2001.6
1942			389.0	8.8				163.1		560.9	1121.9
1943			399.0	2.1				194.8		595.9	1191.8
1944			388.0					189.4		577.4	1154.8
1945			438.0					250.4		688.4	1376.8
1946			550.0	9.3		1332.5		229.5		788.8	2910.1
1947			570.0	13.9		1506.2		222.9		806.8	3119.7
1948	300.0			19.0		1675.8				319.0	2313.9
1949	360.0			10.7		1706.2				370.7	2447.6

TABLE 5I. SUMMARY OF WATER USE FROM VARIOUS SOURCES.

Aquifer or River YEAR	Buffalo aquifer (Mgal)	Dilworth & East Dilworth aquifers (Mgal)	East & West Moorhead aquifers (Mgal)	Fargo aquifer (Mgal)	Horace aquifer (Mgal)	Red River (Mgal)	undefined & other aquifers (Mgal)	West Fargo North aquifer (Mgal)	West Fargo South aquifer (Mgal)	STUDY AREA TOTAL aquifers (Mgal)	STUDY AREA TOTAL all sources (Mgal)
1950	360.0			6.3		1738.5				366.3	2471.1
1951	370.0			8.7		1596.2				378.7	2353.5
1952	360.0		89.6	1.3		1857.5				450.9	2759.3
1953	350.0		85.0			1848.1				435.0	2718.2
1954	400.0		98.9			1667.9				498.9	2665.8
1955	430.0		108.3			1780.6				538.3	2857.3
1956	430.0		106.2			1826.6				536.2	2899.0
1957	350.0		86.7			1754.4				436.7	2627.8
1958	390.0		94.4			1880.9				484.4	2849.8
1959	460.0		112.2			2039.8				572.2	3184.3
1960	425.0		106.6			2136.6				531.6	3199.8
1961	325.0		62.0			2414.7				387.0	3188.6
1962	350.0		39.1			2130.5				389.1	2908.8
1963	315.0		85.2			2496.3				400.2	3296.7
1964	220.0		43.6			2826.6				263.6	3353.9
1965	275.0		84.1			2640.8	3.3	497.0		859.4	4359.5
1966	285.0		112.3			2689.5	0.0	252.5		649.8	3989.2
1967	230.0		150.4			3119.3	0.0	547.4		927.8	4974.9
1968	177.2		130.2			2956.2	5.7	615.5		928.6	4813.5
1969	231.1		142.3			3132.1	3.4	649.7		1026.5	5185.1
1970	281.5		104.3			3342.4	3.1	640.6		1029.4	5401.2
1971	323.6		41.9			2866.0	2.5	551.2		919.2	4704.3
1972	334.7		96.5			3270.5	6.6	521.3		959.1	5188.7
1973	314.2		150.8			3409.9	13.5	562.9		1041.4	5492.6
1974	264.4		141.3			3458.4	19.4	788.5		1213.6	5885.5
1975	312.4		177.0			3279.4	19.0	661.4		1169.8	5619.0
1976	284.2		199.5			6041.8	16.6	666.9	1.8	1169.1	8380.0
1977	306.6		229.2			5504.1	10.5	386.3	73.0	1005.5	7515.2
1978	373.8	71.0	180.8		0.7	3992.5	39.3	649.4	52.8	1367.8	6728.1
1979	444.5	73.7	230.6		0.1	4285.4	36.2	398.6	62.4	1246.0	6777.4
1980	515.7	75.4	192.4		1.4	4728.5	20.5	536.1	72.2	1413.6	7555.8
1981	397.2	69.6	125.0		2.2	4426.0	34.7	548.0	68.0	1244.7	6915.3
1982	458.0	73.6	155.2		3.5	4930.2	38.8	560.2	81.3	1370.6	7671.3
1983	407.0	74.9	143.7	57.9	5.1	4769.6	16.0	503.1	178.8	1386.5	7542.6
1984	854.2	75.2	204.8	43.3	15.4	5061.4	79.6	383.7	377.3	2033.6	9128.5
1985	463.0	71.0	142.3	54.9	18.3	4796.0	83.7	363.9	325.4	1522.5	7841.0
1986	480.2	68.1	195.3	32.0	20.3	4809.3	119.6	339.0	330.7	1585.0	7979.3
1987	728.0	75.9	139.6	49.2	21.9	5386.4	89.1	349.3	368.8	1821.8	9030.0
1988	1197.2	82.1	186.6	45.6	28.4	5893.2	99.3	603.8	392.6	2635.6	11164.3
1989	1178.6	83.1	115.4	46.2	24.3	5589.7	93.5	536.5	316.6	2394.2	10378.1
1990	1088.5	76.9	123.1	40.0	27.4	5395.9	95.0	497.4	316.8	2265.3	9926.4
1991	908.4	77.6	110.9	35.0	28.7	5060.1	75.2	441.2	366.6	2043.5	9147.1
1992	709.0	77.7	102.5	36.0	27.3	4813.2	89.4	438.1	358.2	1838.2	8489.7
1993	523.9	79.6	93.0	34.6	28.4	4800.4	102.5	436.0	398.7	1696.6	8193.7
1994	669.9	88.2	125.1	34.6	33.6	5321.7	108.0	439.3	449.5	1948.3	9218.3
1995	347.0	96.2	85.9	33.7	32.4	5208.6	87.9	513.3	354.2	1550.6	8309.8

TABLE 6A. List with current name and different well descriptions

current name	other name
139-048-06CCD	139-048-06CC
139-048-06CCD	139-048-06CCD1
139-048-06CCD	3 ***
139-048-06CCD	Blue Island Creamery
139-048-06CCD	Blue Valley Creamery
139-048-06CCD	F3
139-048-06CCD	Pierce Building
139-048-06CDD	139-048-06CD
139-048-06CDD	5 ***
139-048-06CDD	F5
139-048-06CDD	Gardner Hotel
139-048-07ACB1	139-048-07AC
139-048-07ACB1	139-048-07ACB
139-048-07ACB1	139-048-07ACC **
139-048-07ACB1	4 ***
139-048-07ACB1	F4
139-048-07ACB1	Island Park
139-048-17BAA	1203 8th St N
139-048-17BAA	139-048-18AA
139-048-17BAA	5 ****
139-048-17BAA	Bailey
139-048-17BAA	M5
139-048-18ABA	139-048-18AB
139-048-18ABA	139-048-18AB1
139-048-18ABA	67 ***
139-048-18ABA	T-9
139-049-01CBD1	139-049-01CB
139-049-01CBD1	139-049-01CB1
139-049-01CBD1	28 ***
139-049-01CBD1	T-4
139-049-01CBD2	139-049-01CB
139-049-01CBD2	139-049-01CBD
139-049-01CBD2	14 ***
139-049-01CCD2	12 ***
139-049-01CCD2	139-040-01CAA *
139-049-01CCD2	139-049-01CC
139-049-01CCD2	139-049-01CC1
139-049-01CCD2	T-1
139-049-02AA3	122 ***
139-049-02AA3	Hobbs
139-049-02AAC	17 ***
139-049-02AAC	Bossart
139-049-02DBB	127 ***
139-049-02DBB	139-049-02DB
139-049-02DBB	F127
139-049-02DBB	T-12
139-049-06AC	56 ***
139-049-06ACA	139-049-06AB
139-049-06ACA	139-049-06AB1
139-049-06ACA	139-049-06ABD
139-049-06ACA	139-049-06AC
139-049-06ACA	57 ***
139-049-06ADB	139-049-06AD
139-049-06ADB	139-049-06AD1
139-049-06ADB	58 ***
139-049-08BA2	109 ***
139-049-08BA2	Sukut
139-049-12ACA	1 ***
139-049-12ACA	11 ***
139-049-12ACA	139-049-12AC
139-049-12ACA	Benson
139-049-12ACA	F1
139-049-12ACA	F11
139-049-12CAD	139-049-12CA
139-049-12CAD	6 ***
139-049-12CAD	Merchants National Bank
140-048-04CBB	8 ****
140-048-04CBB	M8
140-048-23DDD	7 ****
140-048-23DDD	Gunderson
140-048-23DDD	M7
140-048-32CBB2	3 ****
140-048-32CBB2	M3
140-048-32CBB2	municipal golf course
140-048-35CA	43 ***

* only in Sayre, 1957
** only in Klausing, 1966
*** in USGS annual water level reports, in the North Dakota listings
**** in USGS annual water level reports, in the Minnesota listings

TABLE 6B. List with different well descriptions and current name

other name	current name	other name	current name
139-040-01CAA *	139-049-01CCD2	T-4	139-049-01CBD1
139-048-06CC	139-048-06CCD	T-9	139-048-18ABA
139-048-06CCD1	139-048-06CCD	Bailey	139-048-17BAA
139-048-06CD	139-048-06CDD	Benson	139-049-12ACA
139-048-07AC	139-048-07ACB1	Blue Island Creamery	139-048-06CCD
139-048-07ACB	139-048-07ACB1	Blue Valley Creamery	139-048-06CCD
139-048-07ACC **	139-048-07ACB1	Bossart	139-049-02AAC
139-048-18AA	139-048-17BAA	Gardner Hotel	139-048-06CDD
139-048-18AB	139-048-18ABA	Gunderson	140-048-23DDD
139-048-18AB1	139-048-18ABA	Hobbs	139-049-02AA3
139-049-01CB	139-049-01CBD1	Island Park	139-048-07ACB1
139-049-01CB	139-049-01CBD2	Merchants National Bank	139-049-12CAD
139-049-01CB1	139-049-01CBD1	municipal golf course	140-048-32CBB2
139-049-01CBD	139-049-01CBD2	Pierce Building	139-048-06CCD
139-049-01CC	139-049-01CCD2	Sukut	139-049-08BA2
139-049-01CC1	139-049-01CCD2	1 ***	139-049-12ACA
139-049-02DB	139-049-02DBB	3 ****	140-048-32CBB2
139-049-06AB	139-049-06ACA	3 ***	139-048-06CCD
139-049-06AB1	139-049-06ACA	4 ***	139-048-07ACB1
139-049-06ABD	139-049-06ACA	5 ***	139-048-06CDD
139-049-06AC	139-049-06ACA	5 ****	139-048-17BAA
139-049-06AD	139-049-06ADB	6 ***	139-049-12CAD
139-049-06AD1	139-049-06ADB	7 ****	140-048-23DDD
139-049-12AC	139-049-12ACA	8 ****	140-048-04CBB
139-049-12CA	139-049-12CAD	11 ***	139-049-12ACA
1203 8th St N	139-048-17BAA	12 ***	139-049-01CCD2
F1	139-049-12ACA	14 ***	139-049-01CBD2
F3	139-048-06CCD	17 ***	139-049-02AAC
F4	139-048-07ACB1	28 ***	139-049-01CBD1
F5	139-048-06CDD	43 ***	140-048-35CA
F11	139-049-12ACA	56 ***	139-049-06AC
F127	139-049-02DBB	57 ***	139-049-06ACA
M3	140-048-32CBB2	58 ***	139-049-06ADB
M5	139-048-17BAA	67 ***	139-048-18ABA
M7	140-048-23DDD	109 ***	139-049-08BA2
M8	140-048-04CBB	122 ***	139-049-02AA3
T-1	139-049-01CCD2	127 ***	139-049-02DBB
T-12	139-049-02DBB		

* only in Sayre, 1957
** only in Klausing, 1966
*** in USGS annual water level reports, in the North Dakota listings
**** in USGS annual water level reports, in the Minnesota listings

TABLE 7A. MINNESOTA COMMUNITY WATER SUPPLIES IN THE STUDY AREA

	community	supply source of water	supplier source of water*	Minn DNR permit number	location of community (township-range-section)
1	Baker		ind?	-	137-47-1
2	Comstock	unnamed	self	791244	137-48-21 & 28
3	Dilworth	Dilworth & E. Dilworth	self	630687	139-48-2 & 11
4	Georgetown	unnamed	self	851181	142-48-29, 30, 31 & 32
5	Glyndon	unnamed	self	841094	139-47-2 & 11
6	Kragnes	unnamed	ind	-	141-48-34
7	Moorhead	Red River	self	771852	139-48
		East Moorhead	self	871243	
		Buffalo (south field)	self	470014	
		Buffalo (north field)	self	771850	
8	Perley	unnamed	self	841110	143-48-30
9	Rustad	unnamed	ind	-	138-48-28
10	Sabin	Buffalo	self	751179	138-47-7 & 8
		Buffalo	self	951017	
11	Wolverton	unnamed	self	801138	136-48-28

* ind serviced from individual wells
self serviced by the individual community

TABLE 7B. NORTH DAKOTA COMMUNITY WATER SUPPLIES IN THE STUDY AREA

	community	supply source of water	supplier source of water*	SWC water permit number	location of community (township-range-section)
1	Amber Plains	WFS & unnamed	ind & future CRWU		138-49-13
2	Argusville	West Fargo S	CRWU & self	1730	141-49-6
3	Briarwood	West Fargo S	CRWU		138-49-12
4	Chrisan	WFS & unnamed	pC	1791	138-48-7 & 18
5	Christine	Horace	self	1755	136-49-23, 24 & 26
6	Country Acres	WFS & Horace	pC	3090	138-49-30
7	Davenport	West Fargo S	CRWU		137-51-1
8	Durbin	WFS & unnamed	pC		139-51-32
9	Enchanted Forest	West Fargo S	CRWU		137-48-6
10	Fargo	Red River	self	749	139 & 140, 48 & 49
		Sheyenne River	self	1091	
		Sheyenne R. (Ashtabula)	self	4718	
11	Forest River	West Fargo S	CRWU		138-48-18
12	Fradet's Subdivision	Horace	self	3121	138-49-18
13	Frontier	West Fargo S	CRWU		138-49-2
14	Gardner	West Fargo S	CRWU		142-50-1 & 2
15	Granberg	WFS & unnamed	pC		138-49-13
16	Grandin	West Fargo S	CRWU		143-50-3, 144-50-33 & 34
17	Harwood	West Fargo N	self	1908	140-49-4 & 5, 141-49-33 & 34
18	Harwood Township	West Fargo S	CRWU		141-49-29
19	Heritage Hills	West Fargo S	CRWU		138-48-19
20	Hickson	West Fargo S	CRWU		137-49-24
21	Holman's 2nd	West Fargo S	CRWU		138-49-30
22	Holman's 3rd	West Fargo S	CRWU		138-49-30
23	Holman's 4th	West Fargo S	CRWU		138-49-30
24	Horace	Horace	self	3602	138-49-18, 19 & 20
25	Horseshoe Bend	Horace	pC		138-49-6
26	Kensington Place	West Fargo S	CRWU		138-48-30
27	Kindred	West Fargo S	CRWU		137-50-28 & 29
28	Lachmann's Subdivision	West Fargo S	CRWU		140-49-16
29	Lake Shure Estates	West Fargo N	self	2796	140-49-9
30	Maple Prairie	West Fargo S	CRWU		138-48-18
31	Mapleton	West Fargo S	CRWU		139-50-6, 139-51-1, 140-50-31 & 140-51-36
32	North River	West Fargo S	CRWU		140-49-12
33	Northwood	West Fargo S	CRWU		140-49-2
34	Oxbow	unnamed	self	4112	137-49-24
35	Ponderosa	Ponderosa	indiv. wells		138-49-6
36	Prairie Rose	unnamed	indiv. wells		139-49-35
37	Prosper	Prosper	CRWU		140-50-5 & 8
38	Quam's and Miller's	West Fargo S	CRWU		140-49-31
39	Relle's Acres	WFS & unnamed	pC		140-49-21
40	River Bend	West Fargo S	CRWU		138-49-19
41	Riverside	West Fargo N	self	1103	139-49-5 & 6
42	Round Hill	West Fargo S	CRWU		138-49-13
43	Selkirk Settlement	unnamed	self	3937	138-48-6 & 138-49-1
44	Sleepy Hollow	Ponderosa	pC		138-49-6
45	South Acres	unnamed	indiv. wells		139-48-31 & 139-49-36
46	Southhaven	West Fargo S	CRWU		138-49-11
47	St Benedict	West Fargo S	CRWU		138-49-34 & 35
48	Stanley Township	West Fargo S	CRWU		138-49-2
49	Stockman's Subdivision	West Fargo S	CRWU		140-49-13
50	Sunrise Acres	West Fargo S	CRWU		140-49-30
51	Ulphies Subdivision	West Fargo S	CRWU		138-49-24
52	Van Enk Subdivision	West Fargo S	CRWU		138-49-12
53	Walcott	unnamed	self	1903	136-50-35
54	West Chrisan	West Fargo S	CRWU		138-49-12
55	West Fargo	West Fargo N	self	921B	139 & 140, 49 & 50
		West Fargo N	self	1900	
		West Fargo S	self	3585	
56	West Perley	unnamed	indiv. wells		
57	Westbrook	West Fargo S	CRWU		138-49-19
58	Wild Rice	West Fargo S	CRWU		138-49-24
59	Wild Rice River Estates	West Fargo S	CRWU		138-49-24
60	Woodland Acres (Riverdale)	Ponderosa	self	2934	138-49-6
61	Wyum's Subdivision	West Fargo S	indiv wells		140-49-2

* CRWU serviced by Cass Rural Water Users
indiv. wells serviced from individual wells
pC partly serviced by Cass Rural Water Users
self serviced by the individual community